Compact Digital Pressure Switch

ZSE10(F)/ISE10 Series

RoHS

Low profile **9.8 mm**

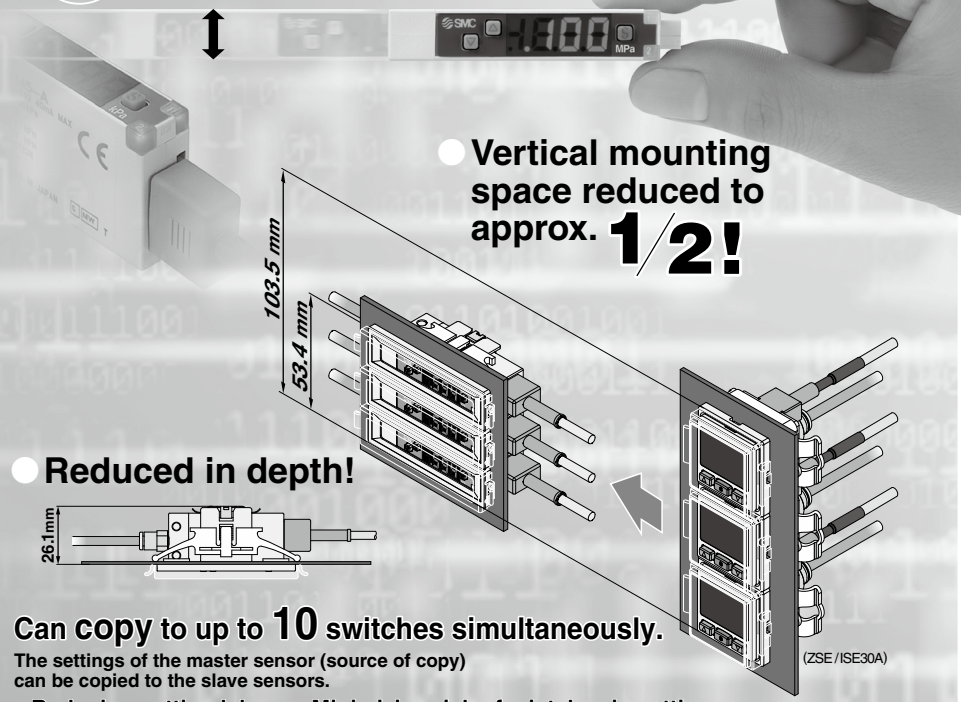

Vertical mounting space reduced to approx. 1/2!

Reduced in depth!

Can copy to up to 10 switches simultaneously.

The settings of the master sensor (source of copy) can be copied to the slave sensors.

- Reducing setting labor
- Minimizing risk of mistakes in setting

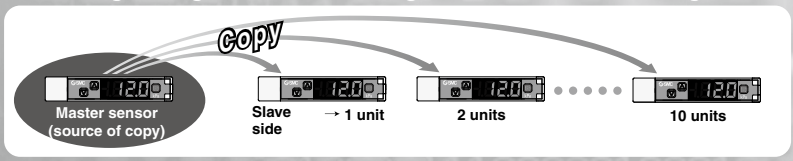

3-step setting

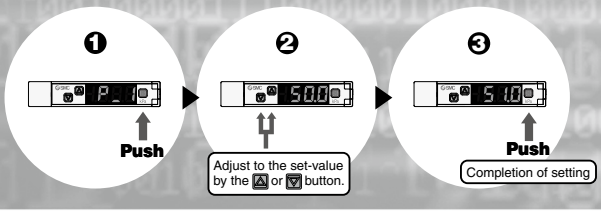

Improved visibility from multiple directions

The vacuum suction and burst pressure can be checked at a glance by indicator lights.

Multi-angle indicator

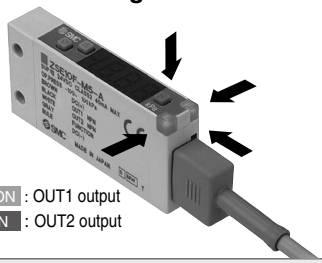

Green light ON : OUT1 output
Red light ON : OUT2 output

<Application example>

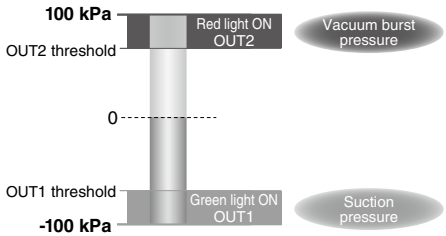

Mounting

Direct mounting

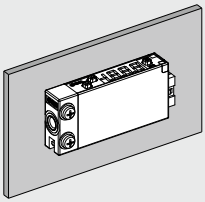

Panel mounting

Can be mounted closely in vertical direction.
One opening for all!

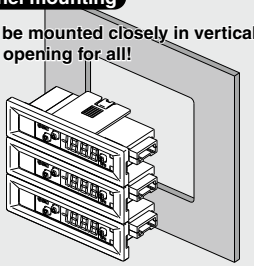

DIN rail mounting

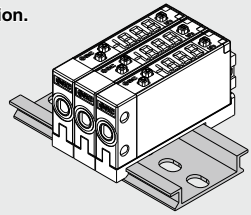

Piping is possible from two directions.

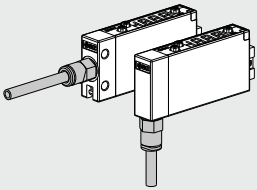

Pressure range of the positive pressure type expanded to vacuum area.

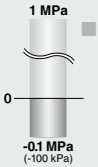

- Rated pressure range: –0.100 to 1.000 MPa

Standardized 2-output type.

- NPN or PNP open collector 2 outputs
- NPN or PNP open collector 1 output + Analog output (1 to 5 V)

Series	ZSE10 (vacuum pressure)	ZSE10F (compound pressure)	ISE10 (positive pressure)
Rated pressure range	0.0 to -101.0 kPa (0 / -101 kPa)	-100.0 to 100.0 kPa (100 kPa / 0 / -100 kPa)	-0.100 to 1.000 MPa (1 MPa / 0 / -0.1 MPa (-100 kPa))
Set pressure range	10.0 to -105.0 kPa	-105.0 to 105.0 kPa	-0.105 to 1.050 MPa
Withstand pressure	500 kPa	500 kPa	1.5 MPa
Min. unit setting	0.1 kPa	0.1 kPa	0.001 MPa
Output	NPN or PNP open collector 2 outputs NPN or PNP open collector 1 output + Analog output (voltage)		

Resolution conversion function

The flickering on the display can be eliminated.

1/1000 1/100

(Only the displayed value is changed, and there is no effect on the accuracy.)

Secret code setting function

A function to prevent operation by anyone other than the designated operator while the keys are locked.

An optional 3-digit value is entered.

The set-value can be checked while the keys are locked.)

Power-saving function

The display can be turned off to save the power consumption.

The value disappears and decimal points start flashing.

(Power consumption reduced by up to 20%)

Compact Digital Pressure Switch

RoHS

ZSE10(F)/ISE10 Series

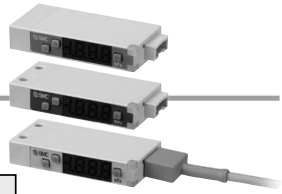

How to Order

For positive pressure: ISE10 – M5 – A – M

For vacuum/ compound pressure: ZSE10 – M5 – B – M

Rated pressure range

ISE10	–0.100 to 1.000 MPa

Rated pressure range

ZSE10	0.0 to –101.0 kPa
ZSE10F	–100.0 to 100 kPa

Piping specifications

M5	M5 female thread/Side ported Note 2) 	01*	R1/8/Side ported Note 1) 
M5R	M5 female thread/Rear ported Note 2) 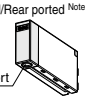	N01*	NPT1/8/Side ported Note 1) 

∗ Made to Order
Note 1) For piping specifications 01 and N01, the tight mounting or direct mounting cannot be made since the fitting interferes with the piping.
Note 2) When using the tight mounting or direct mounting, select an appropriate fitting while referring to the dimensions (pages 72 and 73).

Output specifications

A	NPN open collector 2 outputs
B	PNP open collector 2 outputs
C*	NPN open collector 1 output + Analog voltage
E*	PNP open collector 1 output + Analog voltage

∗ Made to Order

Unit specifications

Nil	With unit switching function Note 3)
M	Fixed SI unit Note 4)
P	With unit switching function Note 3) (Initial value psi)

Note 3) Under the New Measurement Law, sales of switches with the unit switching function are not allowed for use in Japan.
Note 4) Unit: kPa, MPa

Option 3

Symbol	Calibration certificate Note)
Nil	—
K	○

Note) All texts in both English and Japanese.

Option 2

Nil	None
D Note 5)	Panel mount adapter + Front protective cover 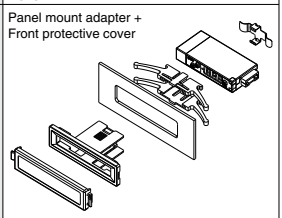
R Note 6)	DIN rail adapter Note 5) 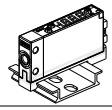

Note 5) Not available for piping specifications of 01 and N01.
Note 6) Not available for piping specifications of M5R, 01 and N01.
Note 7) The DIN rail needs to be prepared by the customer.

Option 1

Nil	Without lead wire 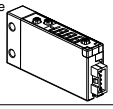
G	Lead wire with connector (Lead wire length: 2 m) With connector cover 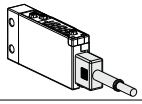

Options/Part No.

When optional parts are required separately, use the following part numbers to place an order.

Part no.	Option
ZS-39-5G	Lead wire with connector (with connector cover) (5 cores, 2 m)
ZS-39-B	Panel mount adapter
ZS-39-D	Panel mount adapter + Front protective cover
ZS-39-R	DIN rail adapter

Part no.	Option
ZS-39-01	Front protective cover
ZS-39-N1*	R1/8 piping adapter
ZS-39-N2*	NPT1/8 piping adapter

∗ Made to Order

Specifications

Refer to pages 11 and 12 for Pressure Switch Precautions. For details about the Specific Product Precautions, refer to the Operation Manual on the SMC website, http://www.smcworld.com Click here for details.

Model			ZSE10 (vacuum pressure)	ZSE10F (compound pressure)	ISE10 (positive pressure)
Rated pressure range			0.0 to –101.0 kPa	–100.0 to 100.0 kPa	–0.100 to 1.000 MPa
Display/Set pressure range			10.0 to –105.0 kPa	–105.0 to 105.0 kPa	–0.105 to 1.050 MPa
Withstand pressure			500 kPa	500 kPa	1.5 MPa
Display/Minimum unit setting			0.1 kPa	0.1 kPa	0.001 MPa
Fluid			Air, Non-corrosive gas, Non-flammable gas		
Power supply voltage			12 to 24 VDC ±10%, Ripple (p-p) 10% or less (With power supply polarity protection)		
Current consumption			40 mA or less		
Switch output			NPN or PNP open collector 2 outputs		
	Maximum load current		80 mA		
	Maximum applied voltage		28 V (With NPN output)		
	Residual voltage		2 V or less (With load current of 80 mA)		
	Response time		2.5 ms or less (Response time selections with anti-chattering function: 20, 100, 500, 1000, 2000 ms)		
	Short circuit protection		Yes		
Repeat accuracy			±0.2% F.S. ±1 digit		
Hysteresis	Hysteresis mode		Variable (0 or above) Note)		
	Window comparator mode				
Analog output	Voltage output	Output voltage (Rated pressure range)	1 to 5 V ±2.5% F.S.		0.6 to 5 V ±2.5% F.S.
		Linearity	±1% F.S.		
		Output impedance	Approx. 1 kΩ		
Display			3 1/2 digit, 7-segment indicator, 1-color display (Red)		
Display accuracy			±2% F.S. ±1 digit (at 25°C ±3°C ambient temperature)		
Indicator light			Lights up when output is turned ON. OUT1: Green OUT2: Red		
Environment	Enclosure		IP40		
	Operating temperature range		Operating: –5 to 50°C, Stored: –10 to 60°C (No freezing or condensation)		
	Operating humidity range		Operating and stored: 35 to 85% RH (No condensation)		
	Withstand voltage		1000 VAC for 1 minute between terminals and housing		
	Insulation resistance		50 MΩ or more (500 VDC measured via megohmmeter) between terminals and housing		
Temperature characteristics			±2% F.S. (at 25°C in an operating range of –5 to 50°C)		
Lead wire with connector			Oilproof heavy-duty vinyl cable 5 cores, ø3.5, 2 m, Conductor area: 0.15 mm^2 (AWG26) Insulator O.D.: 1.0 mm		
Standards			CE marking (EMC directive/RoHS directive), UL/CSA (E216656)		

Note) If the applied pressure fluctuates around the set-value, the hysteresis must be set to a value more than the fluctuating width, otherwise chattering will occur.

Piping Specifications

Model		M5	M5R	01	N01
Port size		M5 x 0.8 (Side ported)	M5 x 0.8 (Rear ported)	R1/8 (Side ported)	NPT1/8 (Side ported)
Wetted part material	Sensor pressure receiving area	Sensor pressure receiving area: Silicon			
	Piping port	C3604 (Electroless nickel plating) O-ring: HNBR			
Weight	With lead wire with connector (5 cores, 2 m)	55 g		63 g	
	Without lead wire with connector	15 g		23 g	

Functions (Refer to pages 76 and 77 for details.)

Copy function	The settings of the master pressure switch can be copied to the slave pressure switches.
Auto-preset function	This function is to calculate a rough set-value automatically based on the on-going operation.
Display calibration function	The scattering of the indicated value can be eliminated.
Peak display function	Can retain the maximum pressure value displayed during measurement.
Bottom display function	Can retain the minimum pressure value displayed during measurement.
Keylock function (Selectable secret code)	Key operation can be locked to prevent any incorrect function of the operation switch.
Zero-clear function	The pressure display can be set at zero when the pressure is open to the atmosphere.
Anti-chattering function	Prevents possible malfunction due to sudden fluctuations in the primary pressure by adjusting the response time.
Display unit switching function	Can convert the display value.
Power-saving mode	Reduces power consumption.
Display resolution conversion function	Changes the display resolution from the default value 1000 to 100. The flickering on the display can be eliminated.
kPa MPa conversion function	The unit can be changed between kPa and MPa.

Set Pressure Range and Rated Pressure Range

Set the pressure within the rated pressure range.

The set pressure range is the range of pressure that is possible in setting.
The rated pressure range is the range of pressure that satisfies the specifications (accuracy, linearity, etc.) on the switch.
Although it is possible to set a value outside the rated pressure range, the specifications will not be guaranteed even if the value stays within the set pressure range.

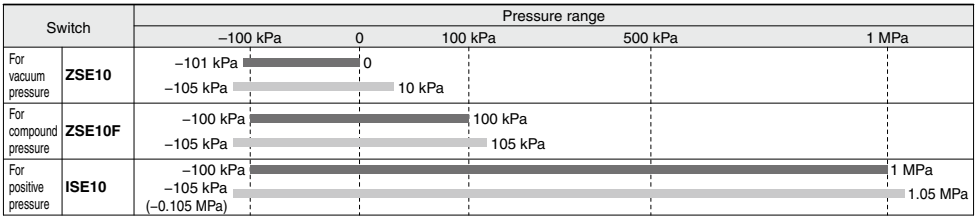

Analog Output

Voltage output

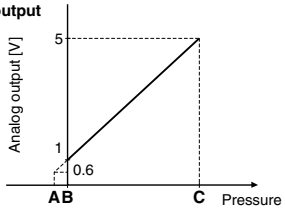

Range	Rated pressure range	A	B	C
For vacuum pressure	0.0 to –101.0 kPa	—	0	–101 kPa
For compound pressure	–100.0 to 100.0 kPa	—	–100 kPa	100 kPa
For positive pressure	–0.100 to 1.000 MPa	–0.1 MPa	0	1 MPa

Internal Circuits and Wiring Examples

-A
NPN (2 outputs)

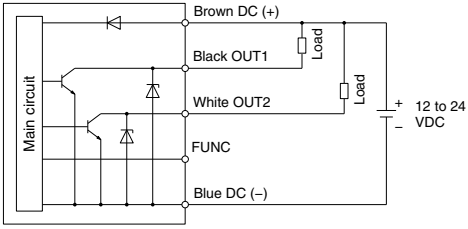

-B
PNP (2 outputs)

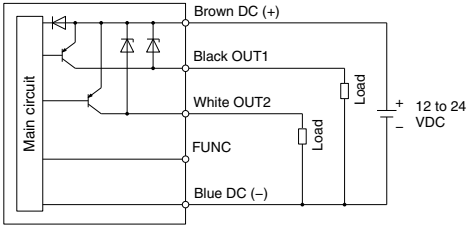

-C
NPN (1 output) + Analog voltage output

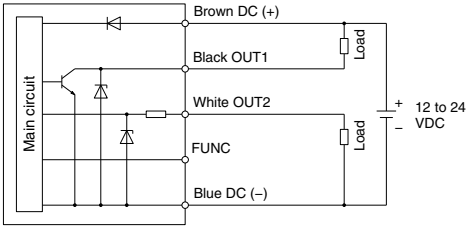

-E
PNP (1 output) + Analog voltage output

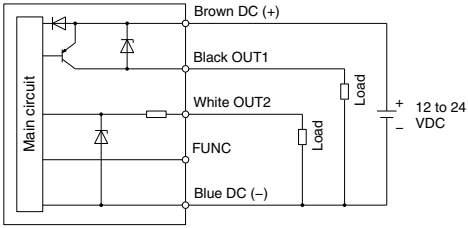

∗ The FUNC terminal is connected when using the copy function. (Refer to "Copy function" on page 76.)

Dimensions (For details about lead wires, refer to the product specifications.)

ZSE10(F)/ISE10−M5−□−□□□□

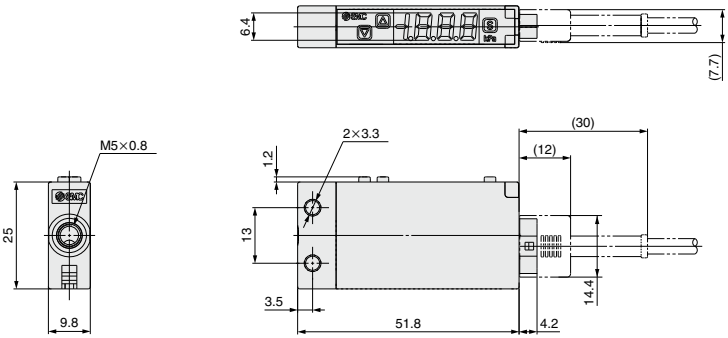

ZSE10(F)/ISE10−M5R−□−□□□□

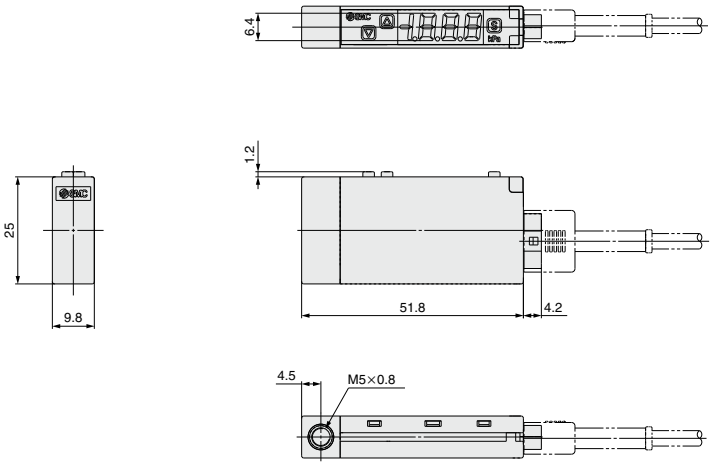

ZSE10(F)/ISE10−01−□−□□□□

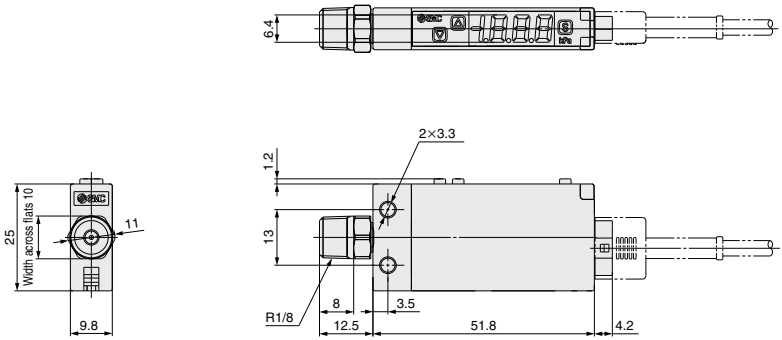

ZSE10(F)/ISE10−N01−□−□□□□

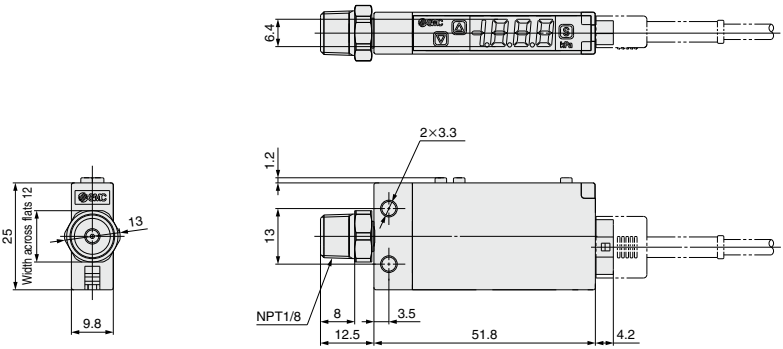

Dimensions

ZSE10(F)/ISE10−M5−□−□□D□

Panel mount adapter + Front protective cover

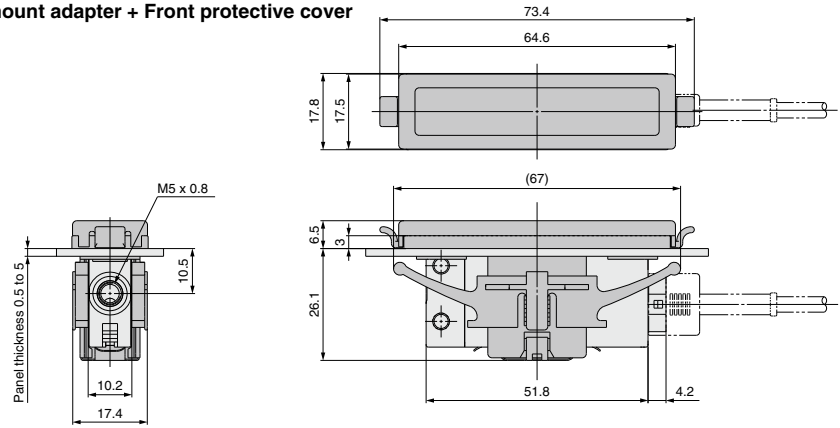

ZSE10(F)/ISE10−M5R−□−□□D□

Panel mount adapter + Front protective cover

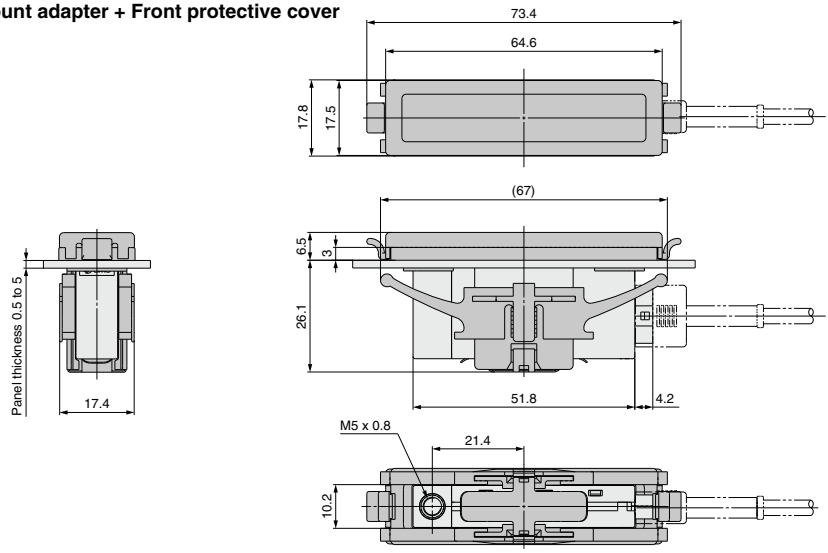

Lead wire with connector ZS-39-5G

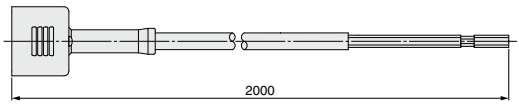

Panel fitting dimensions

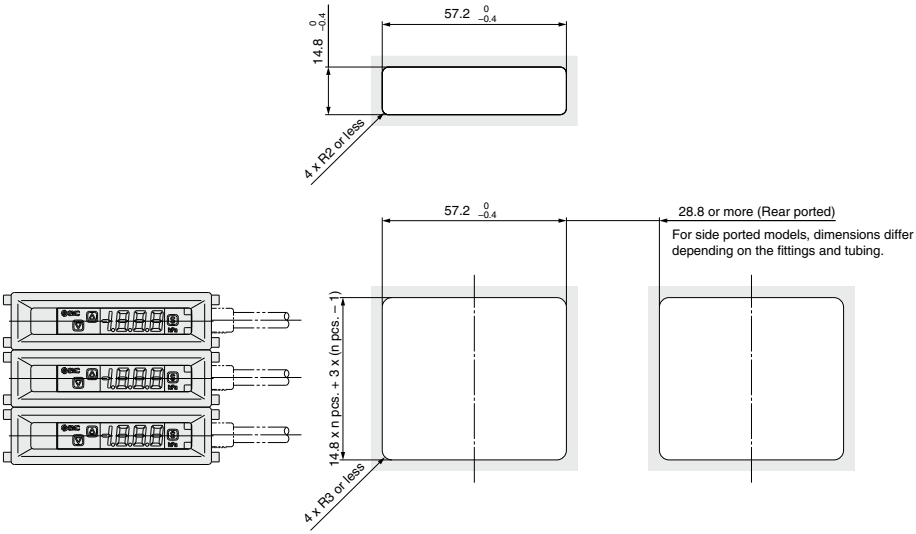

ZSE10(F)/ISE10−M5−□−□□R□

With DIN rail

The DIN rail needs to be prepared by the customer.

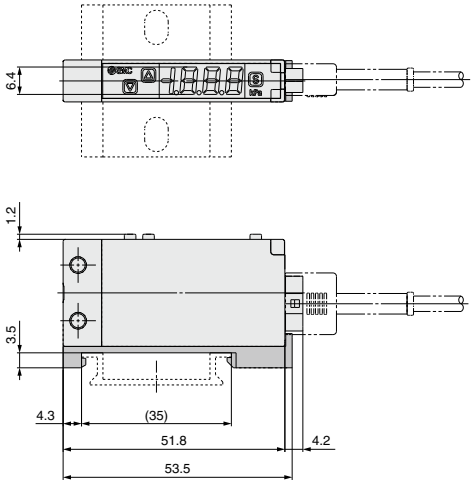

Function Details

A Copy function (F97)

The settings of the master sensor can be copied to the slave sensors, reducing setting labor and minimizing risk of mistakes in setting.
Can copy to up to 10 switches simultaneously.
(Maximum transmission distance 4 m)

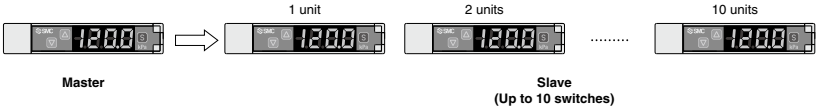

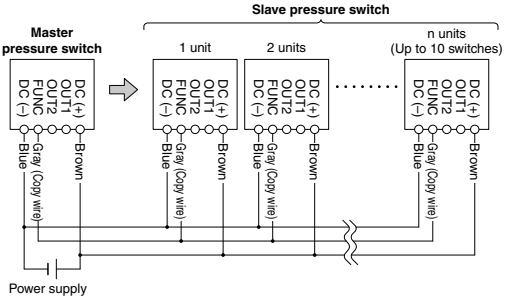

1) Connect the power supply and copy line as shown in the left figure.
2) Select the slave switch which is to be the master, and change it into a master using the buttons. (In the default setting, all switches are set as slaves.)
3) Press the S button of the master switch to start copying.

B Auto-preset function (F5)

Auto-preset function, when selected in the initial setting, calculates and stores the set-value from the measured pressure.
The optimum set-value is determined automatically by repeating vacuum and break with the target workpiece several times.

Suction Verification

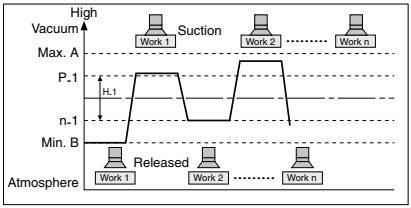

Formula for Obtaining the Set-Value

P_1 or P_2	H_1 or H_2
P_1 (P_2) = A – (A-B)/4 n_1 (n_2) = B + (A-B)/4	H_1 (H_2) = | (A-B)/2|

C Display calibration function (F6)

Fine adjustment of the indicated value of the pressure sensor can be made within the range of ±5% of the read value.
(The scattering of the indicated value can be eliminated.)

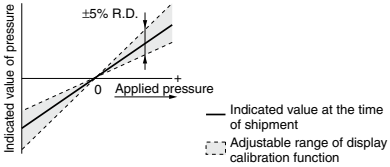

Note) When the display calibration function is used, the set pressure value may change ±1 digit.

D Peak/Bottom value indication

This function constantly detects and updates the maximum (minimum) value and allows to hold the maximum (minimum) pressure value.
When the ▽ △ buttons are simultaneously pressed for 1 second or longer, while "holding", the hold value will be reset.

E Keylock function

Prevents operation errors such as accidentally changing setting values.

F Zero-clear function

This function clears and resets the zero value on the display of measured pressure.
For the pressure switch with analog output, the analog output shifts according to the indication.The indicated value can be adjusted within ±7% F.S. of the pressure when ex-factory.
(ZSE10F (for compound pressure) ±3.5% F.S.)

The F□ in ( ) shows the function code number. Refer to the Operation Manual for the details of operation procedures and function codes. Click here for details.

G Error indication function

Error name	Error code	Description	Action
Overcurrent error	Er1	Load current of 80 mA or more is applied to the switch output (OUT1).	Eliminate the cause of the over current by turning off the power supply, and then turn on it again.
	Er2	Load current of 80 mA or more is applied to the switch output (OUT2).	
Zero-clear error	Er3	During zero-clear operation, pressure over ±7% F.S. is applied. (ZSE10F (compound) ±3.5% F.S.) After 1 s, the mode will reset to measurement mode. ±1% F.S. of the zero-clear range varies between individual products.	Perform zero-clear operation again after restoring the applied pressure to an atmospheric pressure condition.
Applied pressure error	HHH	Supply pressure exceeds the maximum set pressure.	Reset applied pressure to a level within the set pressure range.
	LLL	Supply pressure is below the minimum set pressure.	
System error	Er0	Internal data error	Turn off the power supply and then turn on it again. If the failure cannot be solved, please contact SMC for investigation.
	Er4		
	Er6		
	Er7		
	Er8		
	Er9		

If the failure cannot be solved after the above instructions are performed, please contact SMC for investigation.

H Anti-chattering function (F3)

A large bore cylinder or ejector consumes a large volume of air in operation and may experience a temporary drop in the supply pressure. This function prevents detection of such temporary drops in the supply pressure as an error.

Available response time settings
20 ms, 100 ms, 500 ms, 1000 ms, 2000 ms

<Principle>
This function averages pressure values measured during the response time set by the user and then compares the average pressure value with the pressure set point value to output the result on the switch.

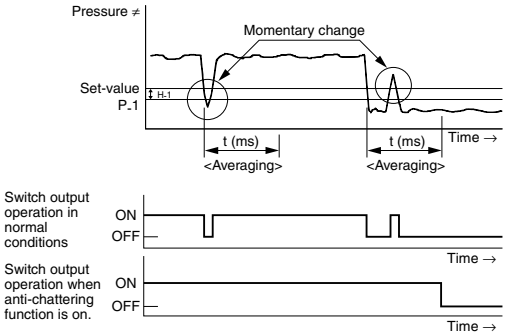

I Display unit switching function (F0)

Display units can be switched with this function.

Display unit / Min. unit setting	PA		GF	bAr	PSi	inH	mmH
	kPa	MPa*	kgf/cm²	bar	psi	inHg	mmHg
ZSE10 (vacuum pressure)	0.1	0.001	0.001	0.001	0.01	0.1	1
ZSE10F (compound pressure)	0.1	0.001	0.001	0.001	0.02	0.1	1
ISE10 (positive pressure)	1	0.001	0.01	0.01	0.1		

* The ZSE10 (vacuum pressure) and ZSE10F (compound pressure) will have different setting and display resolution when the unit is set to MPa.

J Power-saving mode (F80)

Power-saving mode can be selected.
It shifts to the power-saving mode without button operation for 30 seconds. It is set to the normal mode (Power-saving mode is OFF.) when ex-factory. (Decimal points and operation indicator light (only when the switch output is turned ON.) blink in the power-saving mode.)

K Setting of secret code (F81)

Users can select whether a secret code must be entered to release key lock. At the time of shipment from the factory, it is set such that the secret code is not required.