5 Port Solenoid Valve Plug-in Type

S0700 Series

The connection cable and various units for PLC connection in PC wiring systems have been discontinued by the manufacturer. Therefore, while they can no longer be provided, the valve manifold (manifold with built-in valves) can still be ordered. For details, refer to the **Web Catalog**.

Flow rate characteristics

C[dm³/(s·bar)]: **0.39**

b: **0.39**

Cv: **0.11**

Power consumption

0.35 W

Possible to drive cylinders

Up to ø25

(At 300 mm/s)

Slim Compact Bar Base

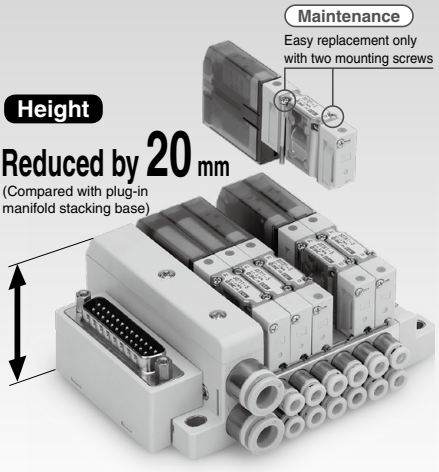

Height

Reduced by 20 mm

(Compared with plug-in manifold stacking base)

Installation volume

Approx. 45%* reduction

Installation area

Approx. 18%* reduction

*: 4-station manifold

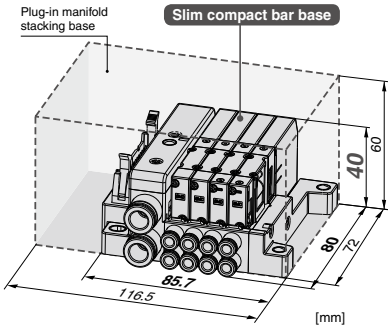

Plug-in Type Stacking Base

■ Fieldbus System (Serial Transmission) Compatible Protocols

DeviceNet, PROFINET, PROFIBUS, CC-Link, EtherNet/IP, EtherCAT, AS-i, ETHERNET POWERLINK

■ EtherNet/IP™ and PROFINET are compatible with wireless systems.

- D-sub connector
- Flat ribbon cable
- Terminal block box
- Lead wire
- Circular connector

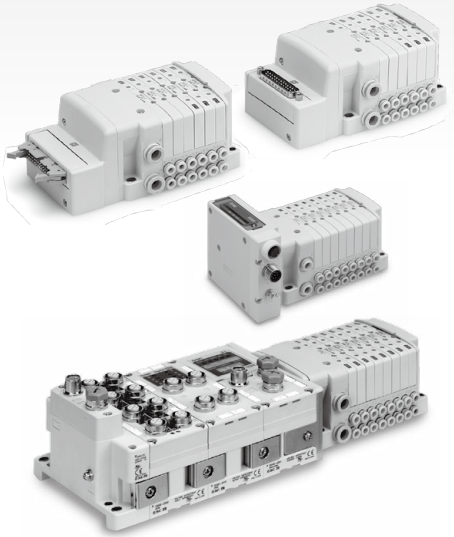

Plug-in Manifold Variations

	S Kit Serial Transmission (Fieldbus System)					
	EX180 For Output	**EX260** For Output	**EX250** For Input/Output	**EX600** For Input/Output	**EX500** Gateway-type	**EX510** Gateway-type
Slim Compact Bar Base	 Page 974	—	—	—	—	 Page 976
Plug-in Type Stacking Base	—	 Page 992	 Page 994	 Page 996	 Page 1000	—
Applicable Network						
DeviceNet	●	●	●	●		●
PROFINET		●		●		
PROFIBUS		●		●	●	●
CC-Link	●	●		●		●
EtherNet/IP		●	●	●	●	
EtherCAT		●				
AS-i			●			
ETHERNET POWERLINK		●				
EtherNet/IP™ compatible wireless base				●		
PROFINET compatible wireless base				●		

4-Position Dual 3-Port Valve

- Two 3-port valves in one body.
- Independently operating 3-port valve at each side of A and B.
- Number of stations occupied for 3-port valve halved.
- Available as 4-position 5-port valve.

A side	B side	Symbol
N.C.	N.C.	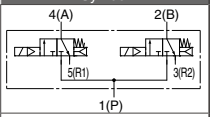
N.O.	N.O.	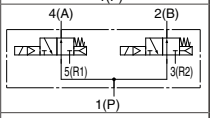
N.C.	N.O.	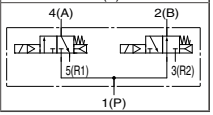

Adopted Direct Manual.

Possible to switch the main valve reliably by direct manual override even when pressure is below the operating pressure range during maintenance.

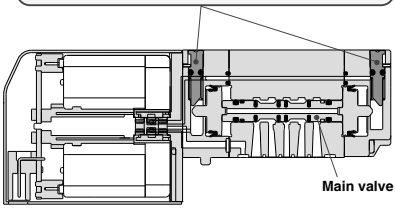

	F Kit D-sub Connector	P Kit Flat Ribbon Cable	T Kit Terminal Block Box	L Kit Lead Wire	M Kit Circular Connector
	MIL Standard	MIL Standard •26 pins, 20 pins			
	 Page 980	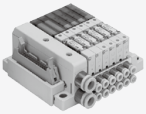 Page 984	—	—	—
	 Page 1006	 Page 1010	 Page 1014	 Page 1018	 Page 1022

Optimum Actuation Size Chart of Air Cylinder

Applicable cylinder speed	Applicable cylinder						
	ø6	ø10	ø16	ø20	ø25	ø32	ø40
100 mm/s or less							
300 mm/s or less							

For horizontal operation. Refer to page 972 for calculation conditions.

5 Port Solenoid Valve Plug Lead Type S0700 Series

For details, refer to page 1047.

•Valve width: 7.4 mm •Power consumption: 0.35 W

Body Ported

- **Flow rate characteristics C[dm³/(s·bar)]: 0.6**
- **Possible to drive cylinders: Up to ø25** (300 mm/s)
- **Weight: 39 g**

Single unit

Manifold

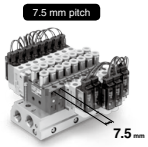

Base Mounted

- **Flow rate characteristics C[dm³/(s·bar)]: 0.39**
- **Possible to drive cylinders: Up to ø25** (300 mm/s)

Single unit

Manifold

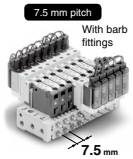

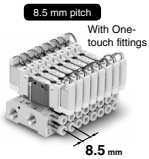

Variations/Options

			Slim Compact Bar Base	Plug-in Type Stacking Base
Base model			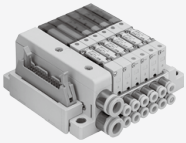 Page 973	 Page 991
Piping spec. Port size	1(P), 3(R)		ø6, ø8, ø1/4", ø5/16"	
	4(A), 2(B)		ø2, ø3.2, ø4, ø1/8", ø5/32"	
Type of wiring	S Kit	**EX510**	●	—
		EX180	●	—
		EX500	—	●
		EX250	—	●
		EX260	—	●
		EX600	—	●
	F Kit	D-sub connector	●	●
	P Kit	Flat ribbon cable	●	●
	T Kit	Terminal block box	—	●
	L Kit	Lead wire	—	●
	M Kit	Circular connector	—	●
Options	Blanking plate		● **Page 1030**	● **Page 1030**
	External pilot [**-R**]		● **Page 1030**	● **Page 1030**
	Direct EXH outlet with built-in silencer [**-S**]		● **Page 1030**	● **Page 1030**
	Individual SUP/EXH spacer		—	● **Page 1031**
	Individual SUP spacer		● **Page 1031**	—
	Individual EXH spacer		● **Page 1031**	—
	SUP block plate		—	● **Page 1031**
	EXH block plate		—	● **Page 1032**
	Back pressure check valve [**-B**]		—	● **Page 1032**
	Blanking plate with output		● **Page 1032**	● **Page 1032**
	Port plug		● **Page 1033**	● **Page 1033**
	DIN rail mounting bracket		● **Page 1033**	● **Page 1033**
	Applicable to DIN rail mounting		● **Page 1033**	● **Page 1033**
	Blanking plug (For One-touch fitting) **KJP-02 KQ2P-23/04/06**		● **Page 1034**	● **Page 1034**
	Silencer (For EXH port)		● **Page 1034**	● **Page 1034**
	Name plate[**-N**] **SS0700-N**-Station (1 to Max. stations)		—	● **Page 1034**
	Dual flow fitting		—	● **Page 1035**
	SUP/EXH block		—	● **Page 1035**
	Double check block (Separated) **VQ1000-FPG-□□**		● **Page 1036**	● **Page 1036**

INDEX

Slim Compact Bar Base

S Kit


EX180


EX510

F Kit

P Kit

Plug-in Type Stacking Base

S Kit


EX250


EX260


EX500


EX600

F Kit

P Kit

T Kit

L Kit

M Kit

S0700 Series
Valve Specifications

Valve Specifications

Model

Type		Type of actuation	Model	Flow rate characteristics						Response time [msec]*1	Weight [g]
				1→4/2 (P→A/B)			4/2→5/3 (A/B→R1/R2)				
				C[dm³/(s·bar)]	b	Cv	C[dm³/(s·bar)]	b	Cv		
Slim compact Bar base Page 973	2-position	Single	S0711	0.39	0.39	0.11	0.37	0.39	0.10	18 or less	36
		Double	S0721	0.39	0.39	0.11	0.37	0.39	0.10	10 or less	41
	4-pos.	Dual 3-port valve	S07$^{A}_{B}$1$_{C}$	0.34	0.34	0.09	0.33	0.33	0.08	18 or less	41
Plug-in type Stacking base Page 991	2-position	Single	S0710	0.39	0.39	0.11	0.37	0.39	0.10	18 or less	30
		Double	S0720	0.39	0.39	0.11	0.37	0.39	0.10	10 or less	38
	4-pos.	Dual 3-port valve	S07$^{A}_{B}$0$_{C}$	0.34	0.34	0.09	0.33	0.33	0.08	18 or less	38

*: Values for cylinder port fitting port size C6.
*1: Based on JIS B 8419-2010 (Supply pressure: 0.5 MPa, with indicator light and surge voltage suppressor, clean air. This will change depending on pressure and air quality.) The value when ON for the double type.

Specifications

Valve specifications	**Valve construction**	Rubber seal	
	Fluid	Air	
	Maximum operating pressure	0.7 MPa	
	Minimum operating pressure	0.2 MPa	
	Ambient and fluid temperature	–10 to 50°C*1	
	Maximum operating cycle	5 Hz	
	Pilot valve exhaust method	Slim compact Bar base	Plug-in type Stacking base
		Common exhaust*2	
	Pilot valve manual override	Push type	
	Lubrication	Not required	
	Impact/Vibration resistance*3	30/100 m/s²	
	Enclosure	IP40	
Electrical specifications	**Coil rated voltage**	24 VDC	
	Allowable voltage fluctuation	±10% of rated voltage	
	Coil insulation type	Class B or equivalent	
	Power consumption (Current) 24 VDC	DC 0.35 W (15 mA)	

*1: Use dry air to prevent condensation when operating at low temperatures.
*2: Valves with the external pilot specifications have a pilot EXH with individual exhaust specifications.
*3: Impact resistance: No malfunction occurred when it is tested with a drop tester in the axial direction and at the right angles to the main valve and armature in both energized and deenergized states every once for each condition.
Vibration resistance: No malfunction occurred in a one-sweep test between 8.3 and 2000 Hz. Test was performed at both energized and de-energized states in the axial direction and at the right angles to the main valve and armature.

Manifold Specifications

Manifold Specifications

Model

Base model		Piping specifications: Port size 1(P), 3(R)	Piping specifications: Port size 4(A), 2(B)	Type of connection	Applicable stations *1	5-station weight [g] *3	Addition per station [g] *3
Slim compact Bar base	SS0751-□□□□  Page 973	C6 (ø6) C8 (ø8) N7 (ø1/4") N9 (ø5/16") Option (Direct EXH outlet with built-in silencer)	C2 (ø2) C3 (ø3.2) C4 (ø4) N1 (ø1/8") N3 (ø5/32")	S kit: Serial transmission (EX510)	Max. 16 stations	270*2	19*5
				S kit: Serial transmission (EX180)	Max. 32 stations	230*2	17
				F kit: D-sub connector	Max. 24 stations	185	17
				P kit: Flat ribbon cable	Max. 24 stations	181	17
Plug-in type Stacking base	SS0750-□□□  Page 991	C6 (ø6) C8 (ø8) N7 (ø1/4") N9 (ø5/16") Option (Direct EXH outlet with built-in silencer)	C2 (ø2) C3 (ø3.2) C4 (ø4) N1 (ø1/8") N3 (ø5/32")	S kit: Serial transmission (EX500)	Max. 16 stations	260*2	20
				S kit: Serial transmission (EX250/260/600)	Max. 24 stations	260*2	20
				F kit: D-sub connector	Max. 24 stations	330	20
				P kit: Flat ribbon cable	Max. 24 stations	325	20
				T kit: Terminal block box	Max. 20 stations	660	20
				L kit: Lead wire	Max. 24 stations	455*4	20
				M kit: Circular connector	Max. 24 stations	390	20

*1: Maximum stations in the case of mixed single and double wiring (special wiring specifications)
*2: Differs depending on the serial unit type.
*3: Weight excluding valve. Refer to page 970 for valve weight.
*4: Weight with lead wire length 0.6 m
*5: Including DIN rail weight

Cylinder Speed Chart

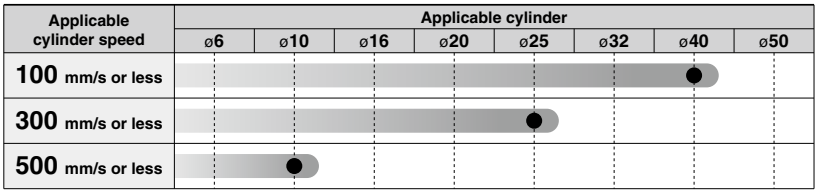

[Common conditions]
- Pressure: 0.5 MPa
- Piping length: 1 m
- Load ratio: 50%
- Stroke: 200 mm

※: Use as a guide for selection.
Please confirm the actual conditions with SMC Model Selection Software.

Symbol

Model	Type of actuation	Symbol
S0710 **S0711**	2-position single	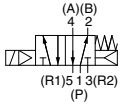
S0720 **S0721**	2-position double	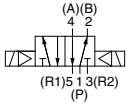
S07A0 **S07A1**	4-position dual 3-port N.C. + N.C. (Exhaust center)	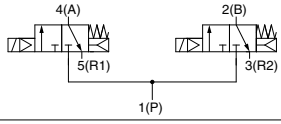
S07B0 **S07B1**	4-position dual 3-port N.O. + N.O. (Pressure center)	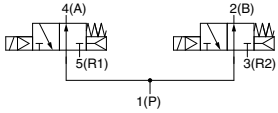
S07C0 **S07C1**	4-position dual 3-port N.C. + N.O.	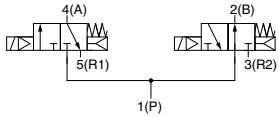

Slim Compact Bar Base

Serial Transmission

S Kit

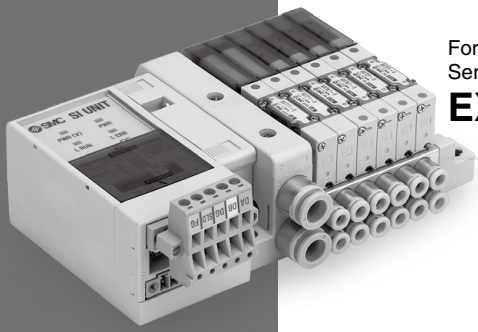

For Output
Serial Transmission System

EX180

Page 974

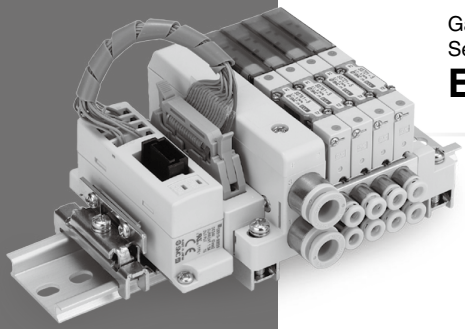

Gateway-type
Serial Transmission System

EX510

Page 976

S0700 Series Slim Compact Bar Base
Kit (Serial Transmission) EX180 (For Output) Serial Transmission System

How to Order Manifold

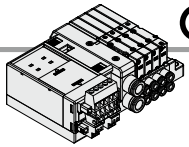

SS0751 – 08 C4 C8 SD V2 □ □ – □

Stations

Symbol	Stations
02	2 stations
⋮	⋮
32*1	32 stations

*1: The maximum number of stations will be different depending on the wiring specifications.

Cylinder port size

Symbol	Port size	
C2	With ø2 One-touch fitting	Metric
C3	With ø3.2 One-touch fitting	
C4	With ø4 One-touch fitting	
N1	With ø1/8" One-touch fitting	Inch
N3	With ø5/32" One-touch fitting	

P, R port size

Symbol	Port size	
C6	With ø6 One-touch fitting	Metric
C8	With ø8 One-touch fitting	
N7	With ø1/4" One-touch fitting	Inch
N9	With ø5/16" One-touch fitting	

*: If an inch size cylinder port is selected, select inch size piping connections for the P and R ports as well.

SI unit output polarity

Symbol	Specifications
Nil	Positive common
N	Negative common

Communication connector

Symbol	Specifications
Nil	T-branch type
A	Straight type

Kit type

0	Without SI unit
V2	CC-Link (32 points)
Q2	DeviceNet® (32 points)
Q3	DeviceNet® (16 points)

*: Please contact SMC for SI unit specifications.

Option

Symbol	Specifications
Nil	None
D	With DIN rail (Rail length: Standard)
D0	Without DIN rail (With bracket)
D□	With DIN rail Designated length (□: Station)
K*1	Special wiring specifications (Except double wiring)
R*2	External pilot
S	Built-in silencer

*1: Indicate the wiring specifications for mixed single and double wirings.
*2: For details, refer to page 1030.
*: When two or more options are specified, indicate them alphabetically.
Example) -KRS
*: **For manifold optional parts, refer to pages 1030 to 1036.**
*: **For manifold exploded view, refer to page 988.**

Refer to pages 1305 to 1309 and the Operation Manual for the details of the EX180 Integrated-type (For Output) Serial Transmission System. Please download the Operation Manual via our website, https://www.smcworld.com

SI Unit Part No.

Symbol	Component module/ Communication connector	Common specification	SI unit part no.	Output stations
V2	CC-Link (32 points) T-branch type	NPN output (Positive common)	EX180-SMJ3	Max. 32*1
V2N		PNP output (Negative common)	EX180-SMJ5	
V2A	CC-Link (32 points) Straight type	NPN output (Positive common)	EX180-SMJ3A	
V2AN		PNP output (Negative common)	EX180-SMJ5A	
Q2	DeviceNet® (32 points) T-branch type	NPN output (Positive common)	EX180-SDN3	Max. 32*1
Q2N		PNP output (Negative common)	EX180-SDN5	
Q2A	DeviceNet® (32 points) Straight type	NPN output (Positive common)	EX180-SDN3A	
Q2AN		PNP output (Negative common)	EX180-SDN5A	
Q3	DeviceNet® (16 points) T-branch type	NPN output (Positive common)	EX180-SDN4	Max. 16*1
Q3N		PNP output (Negative common)	EX180-SDN6	
Q3A	DeviceNet® (16 points) Straight type	NPN output (Positive common)	EX180-SDN4A	
Q3AN		PNP output (Negative common)	EX180-SDN6A	

*1: Single wiring

*: The maximum number of stations is determined by the total number of solenoids.
For mixed single and double wirings, enter -K to the order code options.
*: For the S0700 series, SI unit models EX180-SDN1, EX180-SDN2, or EX180-SMJ1 cannot be selected as S kit (SDQ□, SDV2).

Type of actuation	Single	Double, Dual 3-port
Number of solenoids	1	2

How to Order Valves

S07 1 1 □ – 5

Type of actuation

Symbol	Specifications
1	2-position single
2	2-position double
A	4-position dual 3-port (N.C. + N.C.) [Exhaust center]
B	4-position dual 3-port (N.O. + N.O.) [Pressure center]
C	4-position dual 3-port (N.C. + N.O.)

*: For symbol, refer to page 972.

Base mounted plug-in

Function

Symbol	Specifications
Nil	Standard
R	External pilot*1

*1: Not compatible with dual 3-port valves. The 3(R) port is open to the atmosphere. (Cannot be used for applying pressure or vacuum)

Voltage: 24 VDC

How to Order Manifold Assembly

Example Serial transmission kit

Specify the part numbers for valves and options together beneath the manifold base part number.

SS0751-08C4C8SDQ2 ··· 1 set – Manifold base part no.
- * **S0711-5** ····· 3 sets – Valve part no. (Stations 1 to 3)
- * **S0721-5** ····· 2 sets – Valve part no. (Stations 4 to 5)
- * **S07A1-5** ····· 2 sets – Valve part no. (Stations 6 to 7)
- * **SS0700-10A-3** ····· 1 set – Blanking plate part no. (Station 8)

Prefix the asterisk to the part numbers of the solenoid valve etc.

Write sequentially from the 1st station on the D side. When part numbers written collectively are complicated, specify on the manifold specification sheet.

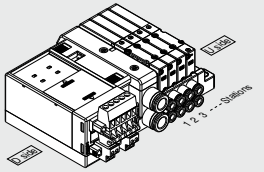

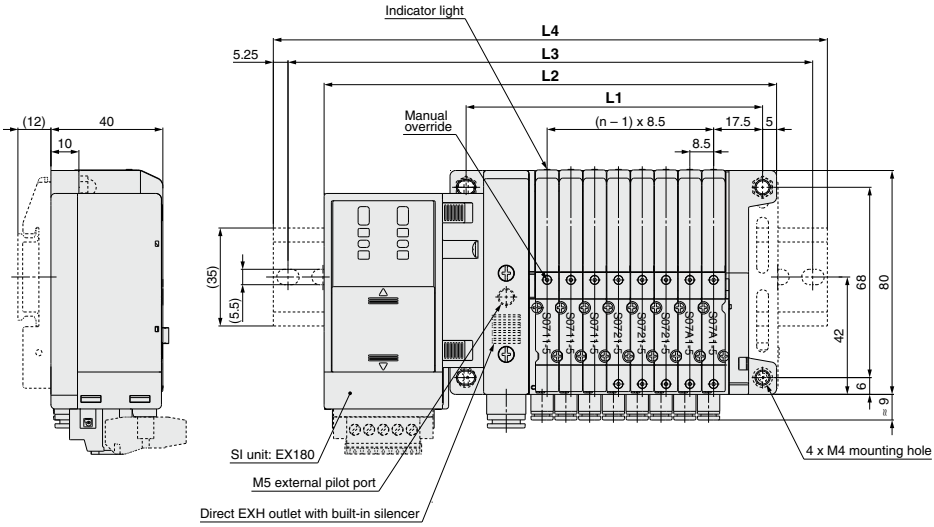

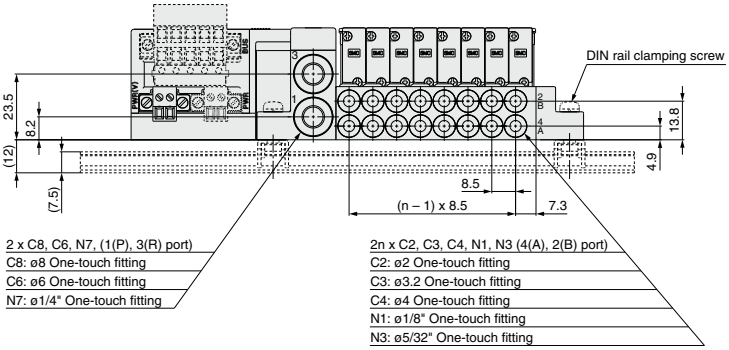

∗: Dotted line indicates DIN rail mounting bracket (-D).

Dimensions

Formula L1 = 8.5n + 38, L2 = 8.5n + 93.7 n: Station (Maximum 32 stations)

L \ n	2	3	4	5	6	7	8	9	10	11	12	13	14	15	16	17	18
L1	55	63.5	72	80.5	89	97.5	106	114.5	123	131.5	140	148.5	157	165.5	174	182.5	191
L2	110.7	119.2	127.7	136.2	144.7	153.2	161.7	170.2	178.7	187.2	195.7	204.2	212.7	221.2	229.7	238.2	246.7
L3	137.5	150	150	162.5	175	175	187.5	200	200	212.5	225	225	237.5	250	250	262.5	275
L4	148	160.5	160.5	173	185.5	185.5	198	210.5	210.5	223	235.5	235.5	248	260.5	260.5	273	285.5

L \ n	19	20	21	22	23	24	25	26	27	28	29	30	31	32
L1	199.5	208	216.5	225	233.5	242	250.5	259	267.5	276	284.5	293	301.5	310
L2	255.2	263.7	272.2	280.7	289.2	297.7	306.2	314.7	323.2	331.7	340.2	348.7	357.2	365.7
L3	275	287.5	300	312.5	312.5	325	337.5	337.5	350	362.5	362.5	375	387.5	387.5
L4	285.5	298	310.5	323	323	335.5	348	348	360.5	373	373	385.5	398	398

S0700 Series Slim Compact Bar Base Kit (Serial Transmission)

EX510 Gateway-type Serial Transmission System

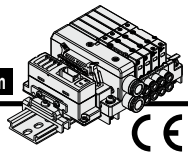

How to Order Manifold

SS0751 – 08 C4 C8 SB □ – □

Stations

Symbol	Stations
02	2 stations
⋮	⋮
16*1	16 stations

*1: The maximum number of stations will be different depending on the wiring specifications.

Cylinder port size

Symbol	Port size	
C2	With ø2 One-touch fitting	Metric
C3	With ø3.2 One-touch fitting	
C4	With ø4 One-touch fitting	
N1	With ø1/8" One-touch fitting	Inch
N3	With ø5/32" One-touch fitting	

Standard station	Max. number of stations for special wiring specifications	Max. number of solenoids
1 to 8 stations	16 stations	16

Type of actuation	Single	Double, Dual 3-port
Number of solenoids	1	2

P, R port size

Symbol	Port size	
C6	With ø6 One-touch fitting	Metric
C8	With ø8 One-touch fitting	
N7	With ø1/4" One-touch fitting	Inch
N9	With ø5/16" One-touch fitting	

*: If an inch size cylinder port is selected, select inch size piping connections for the P and R ports as well.

S kit
EX510 serial wiring

*: For SI unit part number, refer to page 989.

SI unit output polarity

Symbol	Specifications
Nil	Positive common
N	Negative common

Option

Symbol	Specifications
Nil	None
K*1	Special wiring specifications (Except double wiring)
R*2	External pilot
S	Built-in silencer

*1: Indicate the wiring specifications for mixed single and double wirings.
*2: For details, refer to page 1030.
*: When two or more options are specified, indicate them alphabetically.
Example) -KRS
*: **For manifold optional parts, refer to pages 1030 to 1036.**
*: **For manifold exploded view, refer to page 988.**

Refer to pages 1478 to 1504 and the Operation Manual for the details of the EX510 Gateway-type Serial Transmission System. Please download the Operation Manual via our website, https://www.smcworld.com

How to Order Valves

S07 1 1 □ – 5

Type of actuation

Symbol	Specifications
1	2-position single
2	2-position double
A	4-position dual 3-port (N.C. + N.C.) [Exhaust center]
B	4-position dual 3-port (N.O. + N.O.) [Pressure center]
C	4-position dual 3-port (N.C. + N.O.)

*: For symbol, refer to page 972.

Function

Symbol	Specifications
Nil	Standard
R	External pilot*1

*1: Not compatible with dual 3-port valves.
The 3(R) port is open to the atmosphere.
(Cannot be used for applying pressure or vacuum)

Base mounted plug-in

Voltage: 24 VDC

How to Order Manifold Assembly

Example Serial transmission kit

Specify the part numbers for valves and options together beneath the manifold base part number.

SS0751-08C4C8SB ··· **1 set – Manifold base part no.**
* **S0711-5** ····· **3 sets – Valve part no. (Stations 1 to 3)**
* **S0721-5** ····· **2 sets – Valve part no. (Stations 4 to 5)**
* **S07A1-5** ····· **2 sets – Valve part no. (Stations 6 to 7)**
* **SS0700-10A-3** ····· **1 set – Blanking plate part no. (Station 8)**

Prefix the asterisk to the part numbers of the solenoid valve etc.

Write sequentially from the 1st station on the D side. When part numbers written collectively are complicated, specify on the manifold specification sheet.

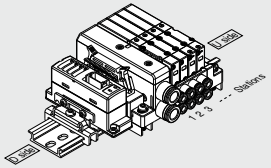

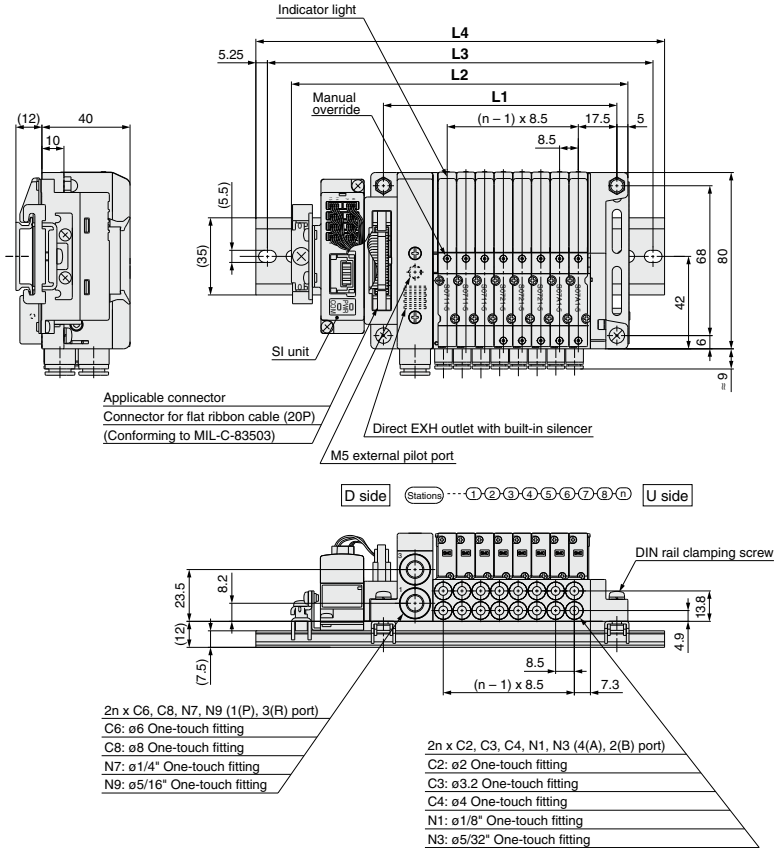

Dimensions

Formula L1 = 8.5n + 38, L2 = 8.5n + 84.7 n: Station (Maximum 16 stations)

L \ n	2	3	4	5	6	7	8	9	10	11	12	13	14	15	16
L1	55	63.5	72	80.5	89	97.5	106	114.5	123	131.5	140	148.5	157	165.5	174
L2	101.7	110.2	118.7	127.2	135.7	144.2	152.7	161.2	169.7	178.2	186.7	195.2	203.7	212.2	220.7
L3	125	137.5	150	150	162.5	175	175	187.5	200	200	212.5	225	225	237.5	250
L4	135.5	148	160.5	160.5	173	185.5	185.5	198	210.5	210.5	223	235.5	235.5	248	260.5

Slim Compact Bar Base

D-sub Connector

F Kit

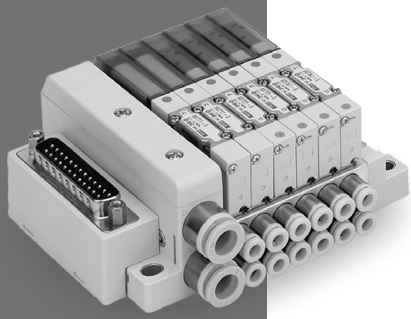

MIL Standard

- 25 pins
- Cable length: 1.5 m, 3 m, 5 m

Page 980

F *S0700 Series* Slim Compact Bar Base Kit (D-sub Connector)

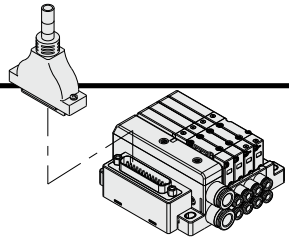

- **The D-sub connector reduces installation labor for electrical connections.**
- **Using the D-sub connector (25P), conforming to MIL standard permits the use of connectors put on the market and gives a wide interchangeability.**

Electrical Wiring Specifications

D-sub connector

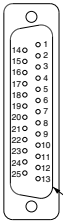

As the standard electrical wiring specifications, double wiring (connected to SOL. A and SOL. B) is adopted for the internal wiring of each station for 12 stations or less, regardless of valve and option types.
Mixed single and double wiring is available as an option. For details, refer to Special Wiring Specifications (Option) below.

D-sub connector assembly wire color (AXT100-DS25-015/030/050)

		Terminal no.	Polarity		Lead wire color	Dot marking
Station 1	SOL.A	1	(–)	(+)	Black	None
	SOL.B	14	(–)	(+)	Yellow	Black
Station 2	SOL.A	2	(–)	(+)	Brown	None
	SOL.B	15	(–)	(+)	Pink	Black
Station 3	SOL.A	3	(–)	(+)	Red	None
	SOL.B	16	(–)	(+)	Blue	White
Station 4	SOL.A	4	(–)	(+)	Orange	None
	SOL.B	17	(–)	(+)	Purple	None
Station 5	SOL.A	5	(–)	(+)	Yellow	None
	SOL.B	18	(–)	(+)	Gray	None
Station 6	SOL.A	6	(–)	(+)	Pink	None
	SOL.B	19	(–)	(+)	Orange	Black
Station 7	SOL.A	7	(–)	(+)	Blue	None
	SOL.B	20	(–)	(+)	Red	White
Station 8	SOL.A	8	(–)	(+)	Purple	White
	SOL.B	21	(–)	(+)	Brown	White
Station 9	SOL.A	9	(–)	(+)	Gray	Black
	SOL.B	22	(–)	(+)	Pink	Red
Station 10	SOL.A	10	(–)	(+)	White	Black
	SOL.B	23	(–)	(+)	Gray	Red
Station 11	SOL.A	11	(–)	(+)	White	Red
	SOL.B	24	(–)	(+)	Black	White
Station 12	SOL.A	12	(–)	(+)	Yellow	Red
	SOL.B	25	(–)	(+)	White	None
	COM.	13	(+)	(–)	Orange	Red
			Positive COM	Negative COM*1		

*1: Mounting valve has no polarity. It can also be used as a negative common.

Special Wiring Specifications (Option) [-K]

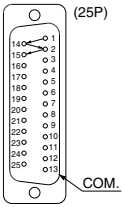

Mixed single and double wiring are available as an option. The maximum number of manifold stations is determined by the number of solenoids. Count one point for a single solenoid type and two points for a double solenoid type. The total number of solenoids (points) must not exceed 24.

1. How to Order valves
Indicate an option symbol, -K, for the manifold part number and be sure to specify the mounting position and number of stations of the single and double wiring on the manifold specification sheet.

2. Wiring specifications
Connector terminal numbers are connected from solenoid station 1 on the A side in the order indicated by the arrows without skipping any terminal numbers.

Cable Assembly

AXT100-DS25-015/030/050

(The D-sub connector cable assemblies can be ordered with manifolds. Refer to How to Order Manifold.)

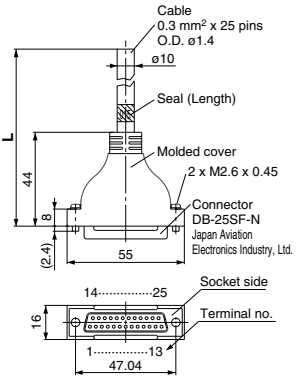

D-sub connector cable assembly

Wire Color by Terminal No.

Terminal no.	Lead wire color	Dot marking
1	Black	None
2	Brown	None
3	Red	None
4	Orange	None
5	Yellow	None
6	Pink	None
7	Blue	None
8	Purple	White
9	Gray	Black
10	White	Black
11	White	Red
12	Yellow	Red
13	Orange	Red
14	Yellow	Black
15	Pink	Black
16	Blue	White
17	Purple	None
18	Gray	None
19	Orange	Black
20	Red	White
21	Brown	White
22	Pink	Red
23	Gray	Red
24	Black	White
25	White	None

D-sub Connector Cable Assembly (Option)

Cable length (**L**)	Assembly part no.	Note
1.5 m	AXT100-DS25-015	Cable 0.3 mm² x 25 cores
3 m	AXT100-DS25-030	
5 m	AXT100-DS25-050	

*: For other commercial connectors, use a 25-pin type with female connector conforming to MIL-C-24308.
*: Cannot be used for movable wiring.

Electrical Characteristics

Item	Property
Conductor resistance Ω/km, 20°C	65 or less
Voltage limit V, 1 min, AC	1000
Insulation resistance MΩ/km, 20°C	5 or more

Connector manufacturers' example

- Fujitsu Limited
- Japan Aviation Electronics Industry, Limited.
- J.S.T. Mfg. Co., Ltd.
- HIROSE ELECTRIC CO., LTD.

*: The minimum bending inner radius of D-sub connector cable is 20 mm.

How to Order Manifold

SS0751 – 08 C4 C8 FD1 – □

Stations

Symbol	Stations
02	2 stations
⋮	⋮
24∗1	24 stations

∗1: The maximum number of stations will be different depending on the wiring specifications.

Cylinder port size

Symbol	Port size	
C2	With ø2 One-touch fitting	Metric
C3	With ø3.2 One-touch fitting	
C4	With ø4 One-touch fitting	
N1	With ø1/8" One-touch fitting	Inch
N3	With ø5/32" One-touch fitting	

P, R port size

Symbol	Port size	
C6	With ø6 One-touch fitting	Metric
C8	With ø8 One-touch fitting	
N7	With ø1/4" One-touch fitting	Inch
N9	With ø5/16" One-touch fitting	

∗: If an inch size cylinder port is selected, select inch size piping connections for the P and R ports as well.

Kit type/Cable length

Kit type	Symbol	Specifications	Standard station	Max. number of stations for special wiring specifications	Max. number of solenoids
F kit	**FD0**	D-sub connector (25P), without cable	2 to 12 stations	24 stations	24
	FD1	D-sub connector (25P), with 1.5 m cable			
	FD2	D-sub connector (25P), with 3.0 m cable			
	FD3	D-sub connector (25P), with 5.0 m cable			

∗: The maximum number of stations is determined by the total number of solenoids.
For mixed single and double wirings, enter -K to the order code options.

Type of actuation	Single	Double, Dual 3-port
Number of solenoids	1	2

Option

Symbol	Specifications
Nil	None
D	With DIN rail (Rail length: Standard)
D0	Without DIN rail (With bracket)
D□∗1	With DIN rail Designated length (□: Station)
K∗2	Special wiring specifications (Except double wiring)
R∗3	External pilot
S	Built-in silencer

∗1: The available number of stations is larger than the number of manifold stations.
∗2: Indicate the wiring specifications for mixed single and double wirings.
∗3: For details, refer to page 1030.
∗: When two or more options are specified, indicate them alphabetically. Example) -DKN
∗: **For manifold optional parts, refer to pages 1030 to 1036.**
∗: **For manifold exploded view, refer to page 988.**

How to Order Valves

S07 1 1 □ – 5

Type of actuation

Symbol	Specifications
1	2-position single
2	2-position double
A	4-position dual 3-port (N.C. + N.C.) [Exhaust center]
B	4-position dual 3-port (N.O. + N.O.) [Pressure center]
C	4-position dual 3-port (N.C. + N.O.)

∗: For symbol, refer to page 972.

Base mounted plug-in

Function

Symbol	Specifications
Nil	Standard
R	External pilot∗1

∗1: Not compatible with dual 3-port valves.

Voltage

Symbol	Specifications
5	24 VDC
6	12 VDC

How to Order Manifold Assembly

Example D-sub connector kit

Specify the part numbers for valves and options together beneath the manifold base part number.

SS0751-08C4C8FD1 ··· **1 set – Manifold base part no.**
∗ **S0711-5** ····· **3 sets – Valve part no. (Stations 1 to 3)**
∗ **S0721-5** ····· **2 sets – Valve part no. (Stations 4 to 5)**
∗ **S07A1-5** ····· **2 sets – Valve part no. (Stations 6 to 7)**
∗ **SS0700-10A-3** ····· **1 set – Blanking plate part no. (Station 8)**

Prefix the asterisk to the part numbers of the solenoid valve etc.

Write sequentially from the 1st station on the D side. When part numbers written collectively are complicated, specify on the manifold specification sheet.

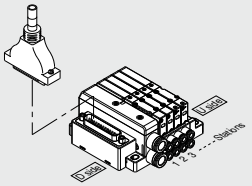

S0700 Series
Kit (D-sub Connector)

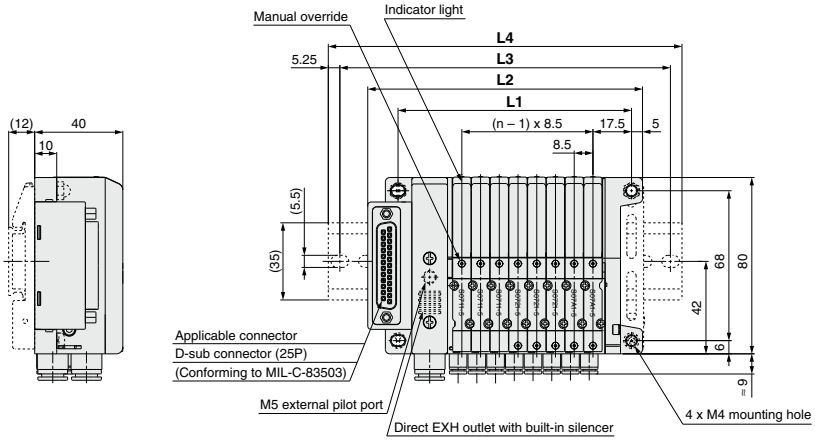

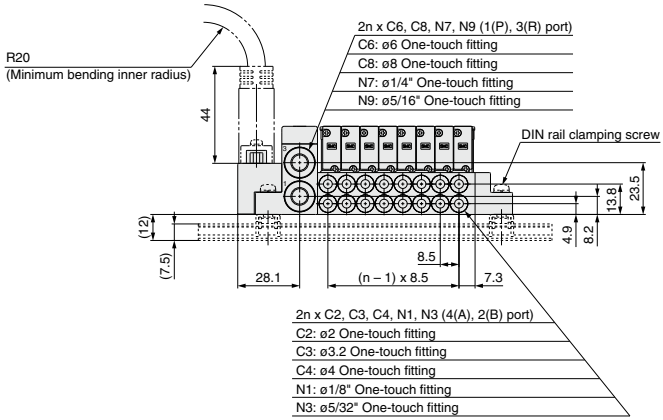

Dimensions

Formula L1 = 8.5n + 38, L2 = 8.5n + 56.7 n: Station (Maximum 24 stations)

L \ n	2	3	4	5	6	7	8	9	10	11	12	13	14	15	16	17	18	19	20	21	22	23	24
L1	55	63.5	72	80.5	89	97.5	106	114.5	123	131.5	140	148.5	157	165.5	174	182.5	191	199.5	208	216.5	225	233.5	242
L2	73.7	82.2	90.7	99.2	107.7	116.2	124.7	133.2	141.7	150.2	158.7	167.2	175.7	184.2	192.7	201.2	209.7	218.2	226.7	235.2	243.7	252.2	260.7
L3	100	112.5	112.5	125	137.5	137.5	150	162.5	162.5	175	187.5	187.5	200	212.5	212.5	225	237.5	237.5	250	262.5	275	275	287.5
L4	110.5	123	123	135.5	148	148	160.5	173	173	185.5	198	198	210.5	223	223	235.5	248	248	260.5	273	285.5	285.5	298

Slim Compact Bar Base

Flat Ribbon Cable

P Kit

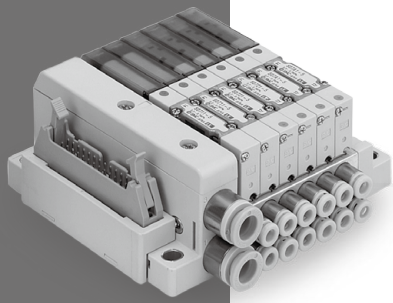

MIL Standard

- 26 pins, 20 pins
- Cable length: 1.5 m, 3 m, 5 m

Page 984

P S0700 Series Slim Compact Bar Base Kit (Flat Ribbon Cable)

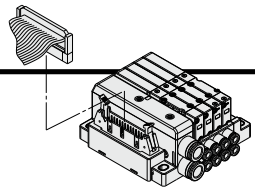

- **Flat ribbon cable connector reduces installation labor for electrical connection.**
- **Using the connector for flat ribbon cable (26P, 20P) conforming to MIL standard permits the use of connectors put on the market and gives a wide interchangeability.**

Electrical Wiring Specifications

Flat ribbon cable connector

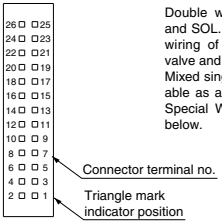

Double wiring (connected to SOL. A and SOL. B) is adopted for the internal wiring of each station, regardless of valve and option types.
Mixed single and double wiring is available as an option. For details, refer to Special Wiring Specifications (Option) below.

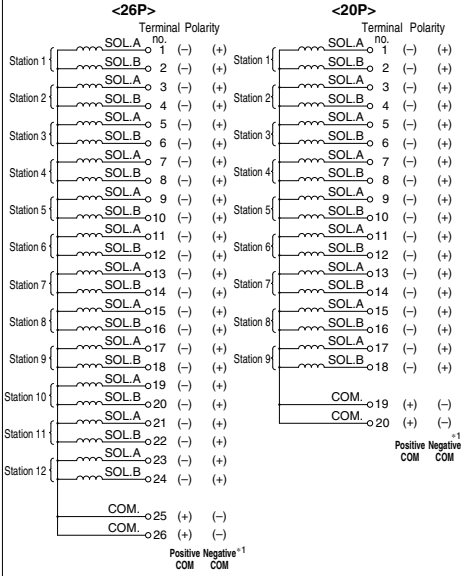

*1: Mounting valve has no polarity. It can also be used as a negative common.

Cable Assembly

AXT100-FC$\begin{smallmatrix}20\\26\end{smallmatrix}$-$\begin{smallmatrix}1\\2\\3\end{smallmatrix}$

(Type 26P flat ribbon cable connector assemblies can be ordered with manifolds. Refer to How to Order Manifold.)

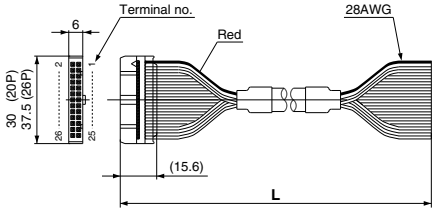

Flat Ribbon Cable Connector Assembly (Option)

Cable length (**L**)	Assembly part no.	
	26P	20P
1.5 m	AXT100-FC26-1	AXT100-FC20-1
3 m	AXT100-FC26-2	AXT100-FC20-2
5 m	AXT100-FC26-3	AXT100-FC20-3

*: For other commercial connectors, use a 20- or 26-pin type with strain relief conforming to MIL-C-83503.
*: Cannot be used for movable wiring.

Connector manufacturers' example

- HIROSE ELECTRIC CO., LTD.
- 3M Japan Limited
- Fujitsu Limited
- Japan Aviation Electronics Industry, Limited.
- J.S.T. Mfg. Co., Ltd.
- Oki Electric Cable Co., Ltd.

Special Wiring Specifications (Option) [-K]

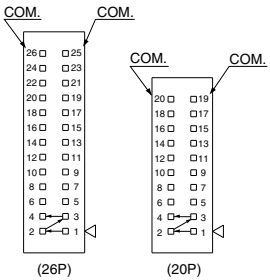

Mixed single and double wiring are available as an option. The maximum number of manifold stations is determined by the number of solenoids. Count one point for a single solenoid type and two points for a double solenoid type. The total number of solenoids (points) must not exceed 24 for 26P, 18 for 20P.

1. How to Order valves
Indicate an option symbol, -K, for the manifold part number and be sure to specify the mounting position and number of stations of the single and double wiring on the manifold specification sheet.

2. Wiring specifications
Connector terminal numbers are connected from solenoid station 1 on the A side in the order indicated by the arrows without skipping any terminal numbers.

How to Order Manifold

SS0751 – 08 C4 C8 PD1 – □

Stations

Symbol	Stations
02	2 stations
⋮	⋮
24	24 stations

∗: The maximum number of stations will be different depending on the wiring specifications.

Cylinder port size

Symbol	Port size	
C2	With ø2 One-touch fitting	Metric
C3	With ø3.2 One-touch fitting	
C4	With ø4 One-touch fitting	
N1	With ø1/8" One-touch fitting	Inch
N3	With ø5/32" One-touch fitting	

P, R port size

Symbol	Port size	
C6	With ø6 One-touch fitting	Metric
C8	With ø8 One-touch fitting	
N7	With ø1/4" One-touch fitting	Inch
N9	With ø5/16" One-touch fitting	

∗: If an inch size cylinder port is selected, select inch size piping connections for the P and R ports as well.

Kit type/Cable length

Kit type	Symbol	Specifications	Standard station	Max. number of stations for special wiring specifications	Max. number of solenoids
P kit	**PD0**	Flat ribbon cable (26P), without cable	2 to 12 stations	24 stations	24
	PD1	Flat ribbon cable (26P), with 1.5 m cable			
	PD2	Flat ribbon cable (26P), with 3.0 m cable			
	PD3	Flat ribbon cable (26P), with 5.0 m cable			
	PDC	Flat ribbon cable (20P), without cable	2 to 9 stations	18 stations	18

∗: The maximum number of stations is determined by the total number of solenoids.
For mixed single and double wirings, enter -K to the order code options.

Type of actuation	Single	Double, Dual 3-port
Number of solenoids	1	2

Option

Symbol	Specifications
Nil	None
D	With DIN rail (Rail length: Standard)
D0	Without DIN rail (With bracket)
D□∗1	With DIN rail Designated length (□: Station)
K∗2	Special wiring specifications (Except double wiring)
R∗3	External pilot
S	Built-in silencer

∗1: The available number of stations is larger than the number of manifold stations.
∗2: Indicate the wiring specifications for mixed single and double wirings.
∗3: For details, refer to page 1030.
∗: When two or more options are specified, indicate them alphabetically. Example) -DKR
∗: **For manifold optional parts, refer to pages 1030 to 1036.**
∗: **For manifold exploded view, refer to page 988.**

How to Order Valves

S07 1 1 □ – 5

Type of actuation

Symbol	Specifications
1	2-position single
2	2-position double
A	4-position dual 3-port (N.C. + N.C.) [Exhaust center]
B	4-position dual 3-port (N.O. + N.O.) [Pressure center]
C	4-position dual 3-port (N.C. + N.O.)

∗: For symbol, refer to page 972.

Base mounted plug-in

Function

Symbol	Specifications
Nil	Standard
R	External pilot∗1

∗1: Not compatible with dual 3-port valves.
The 3(R) port is open to the atmosphere.
(Cannot be used for applying pressure or vacuum)

Voltage

Symbol	Specifications
5	24 VDC
6	12 VDC

How to Order Manifold Assembly

Example **Flat ribbon cable kit**

Specify the part numbers for valves and options together beneath the manifold base part number.

SS0751-08C4C8PD1 ··· **1 set – Manifold base part no.**
∗ **S0711-5** ····· **2 sets – Valve part no. (Stations 1 to 3)**
∗ **S0721-5** ····· **4 sets – Valve part no. (Stations 4 to 5)**
∗ **S07A1-5**····· **1 set – Valve part no. (Stations 6 to 7)**
∗ **SS0700-10A-3** ····· **1 set – Blanking plate part no. (Station 8)**

Prefix the asterisk to the part numbers of the solenoid valve etc.

Write sequentially from the 1st station on the D side. When part numbers written collectively are complicated, specify on the manifold specification sheet.

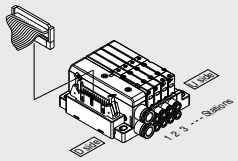

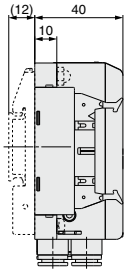

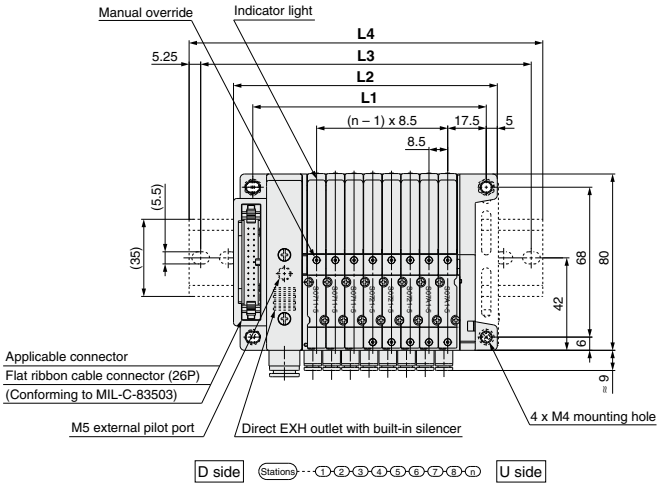

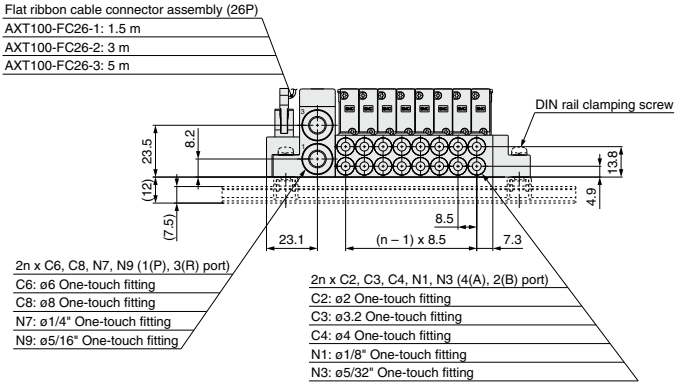

Dimensions

Formula L1 = 8.5n + 38, L2 = 8.5n + 51.7 n: Station (Maximum 24 stations)

L \ n	2	3	4	5	6	7	8	9	10	11	12	13	14	15	16	17	18	19	20	21	22	23	24
L1	55	63.5	72	80.5	89	97.5	106	114.5	123	131.5	140	148.5	157	165.5	174	182.5	191	199.5	208	216.5	225	233.5	242
L2	68.7	77.2	85.7	94.2	102.7	111.2	119.7	128.2	136.7	145.2	153.7	162.2	170.7	179.2	187.7	196.2	204.7	213.2	221.7	230.2	238.7	247.2	255.7
L3	100	100	112.5	125	137.5	137.5	150	150	162.5	175	175	187.5	200	200	212.5	225	225	237.5	250	250	262.5	275	275
L4	110.5	110.5	123	135.5	148	148	160.5	160.5	173	185.5	185.5	198	210.5	210.5	223	235.5	235.5	248	260.5	260.5	273	285.5	285.5

Construction

Single: S0711

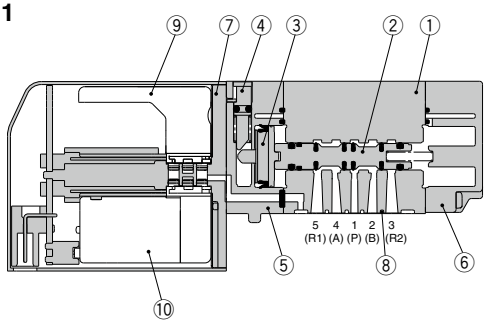

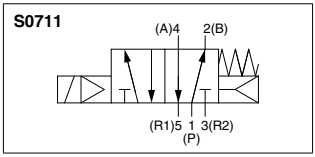

Double: S0721

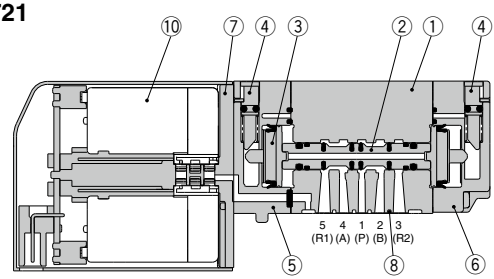

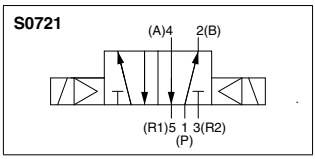

Dual 3-Port: S07$\begin{matrix}\mathbf{A}\\\mathbf{B}\\\mathbf{C}\end{matrix}$1

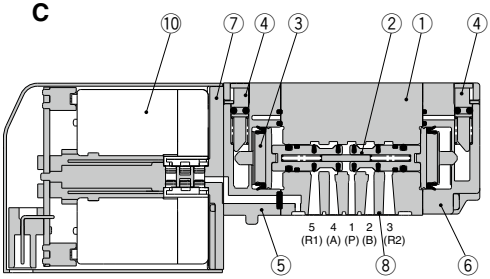

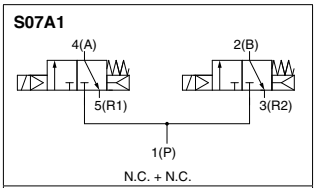

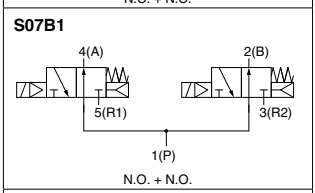

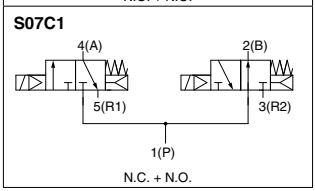

Component Parts

No.	Description	Material
1	**Body**	Zinc die-casted
2	**Spool**	Aluminum
3	**Piston**	Resin
4	**Manual override**	Resin
5	**Adapter plate**	Resin
6	**End plate**	Resin
7	**Pilot spacer**	Resin
8	**Interface gasket**	HNBR
9	**Plate**	Resin
10	**Pilot valve assembly** *1	—

*1: Please consult with SMC for pilot valve replacement.

S0700 Series Slim Compact Bar Base
Manifold Exploded View

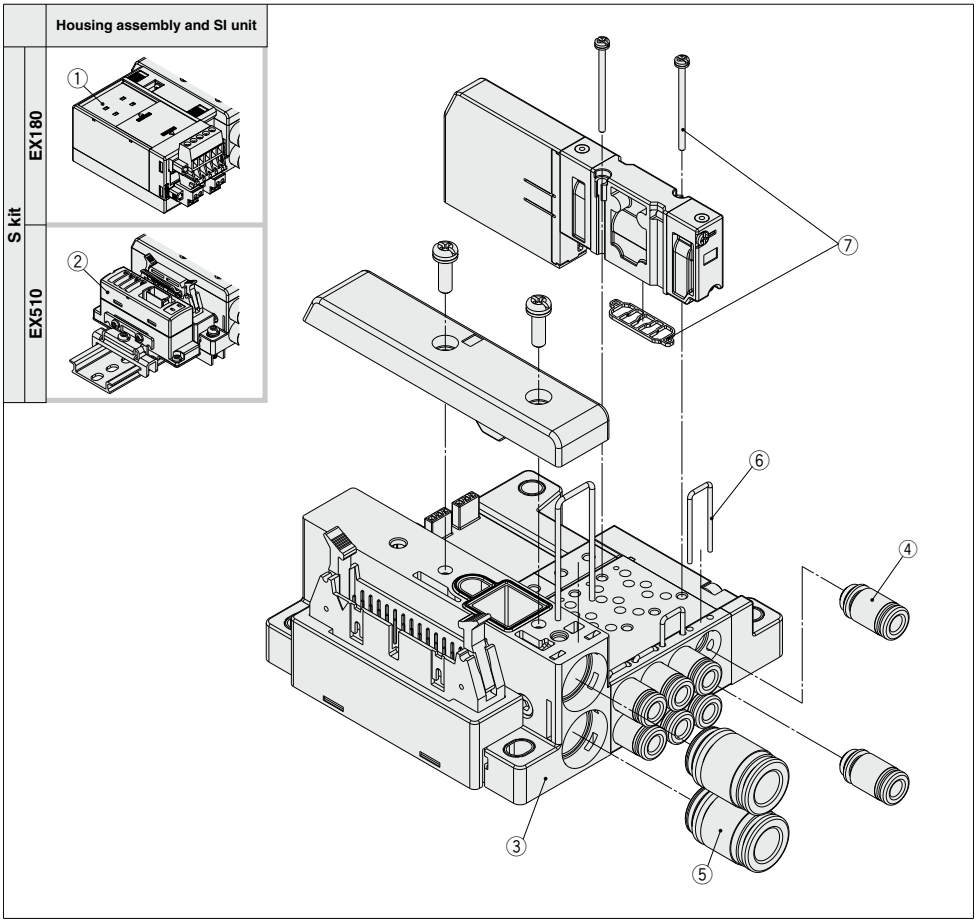

*: It is not possible to increase or decrease the number of stations or change the wiring kit on the slim compact bar base.
To change them, please change the entire base unit.

Manifold Assembly Part No.

No.	Description	Part no.	Note
①	**SI unit**	**EX180-SDN3**	DeviceNet® 32 outputs NPN (positive common) T-branch type communication connector
		EX180-SDN3A	DeviceNet® 32 outputs NPN (positive common) Straight type communication connector
		EX180-SDN4	DeviceNet® 16 outputs NPN (positive common) T-branch type communication connector
		EX180-SDN4A	DeviceNet® 16 outputs NPN (positive common) Straight type communication connector
		EX180-SMJ3	CC-Link 32 outputs NPN (positive common) T-branch type communication connector
		EX180-SMJ3A	CC-Link 32 outputs NPN (positive common) Straight type communication connector
		EX180-SDN5	DeviceNet® 32 outputs PNP (negative common) T-branch type communication connector
		EX180-SDN5A	DeviceNet® 32 outputs PNP (negative common) Straight type communication connector
		EX180-SDN6	DeviceNet® 16 outputs PNP (negative common) T-branch type communication connector
		EX180-SDN6A	DeviceNet® 16 outputs PNP (negative common) Straight type communication connector
		EX180-SMJ5	CC-Link 32 outputs PNP (negative common) T-branch type communication connector
		EX180-SMJ5A	CC-Link 32 outputs PNP (negative common) Straight type communication connector
②	**SI unit**	**EX510-S002A**	NPN (Positive common)
		EX510-S102A	PNP (Negative common)
③	**Base unit**	**SS0751-□□□□**	Refer to How to Order for each kit.

④ Fitting assembly part number for cylinder port

VVQ0000−50A−□

Port size

Symbol	Applicable tube
C2	Applicable tube ø2
C3	Applicable tube ø3
C4	Applicable tube ø4
N1	Applicable tube ø1/8"
N3	Applicable tube ø5/32"

∗: Purchasing order is available in units of 10 pieces.
∗: For One-touch fittings replacement, refer to Specific Product Precautions 2.

⑤ Fitting assembly part number for P, R port

VVQ1000−51A−□

Port size

Symbol	Applicable tube
C6	Applicable tube ø6
C8	Applicable tube ø8
N7	Applicable tube ø1/4"
N9	Applicable tube ø5/16"

∗: Purchasing order is available in units of 10 pieces.
∗: For One-touch fittings replacement, refer to Specific Product Precautions 2.

No.	Description	Part no.
⑥	**Clip**	**SS0700-80A-5**

∗: 1 set includes 10 pieces.

No.	Description	Part no.
⑦	**Gasket, Screw**	**S0700-GS-3**

∗: 1 set includes 10 pieces. (1 gasket, 2 screws)

Plug-in Type Stacking Base

Serial Transmission

S Kit

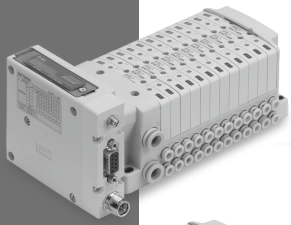

For Output
Serial Transmission System

EX260

Page 992

For Input/Output
Serial Transmission System

EX250

Page 994

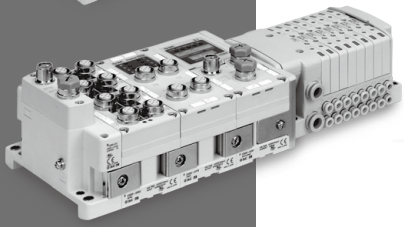

For Input/Output
Serial Transmission System

EX600

Page 996

Gateway Decentralized System 2

EX500

Page 1000

S0700 Series Stacking Base Kit (Serial Transmission)

EX260 (For Output) Serial Transmission System

How to Order Manifold

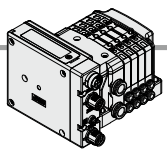

SS0750 – 08 C4 C8 SNAN – B

❶ ❷ ❸ ❹ ❺

❶ Stations

In the case of the 32-output SI unit

Symbol	Stations	Note
01	1 station	Double wiring*1
⋮	⋮	
16	16 stations	
01	1 station	Specified layout*2 (Available up to 32 solenoids)
⋮	⋮	
24	24 stations	

In the case of the 16-output SI unit

Symbol	Stations	Note
01	1 station	Double wiring*1
⋮	⋮	
08	8 stations	
01	1 station	Specified layout*2 (Available up to 16 solenoids)
⋮	⋮	
16	16 stations	

*1: Double wiring : single, double, 3-position and 4-position solenoid valves can be used on all manifold stations.
Up to 24 stations due to the structure of the manifold. Please note the maximum number of stations is 24 for single wiring, too.
*2: Specified layout: Indicate the wiring specifications with the manifold specification sheet.
(Note that double,3-position and 4-position valves cannot be used where single solenoid wiring has been specified.)
*: This also includes the number of blanking plate assembly.

❷ Cylinder port size

Symbol	Port size	
C2	With ø2 One-touch fitting	Metric
C3	With ø3.2 One-touch fitting	
C4	With ø4 One-touch fitting	
CM	Mixed sizes and with port plug*1	
N1	With ø1/8" One-touch fitting	Inch
N3	With ø5/32" One-touch fitting	
NM	Mixed sizes and with port plug*1	

*1: Specify Mixed sizes and with port plug on the manifold specification sheet.

❸ P, R port size

Symbol	Port size	
C6	With ø6 One-touch fitting	Metric
C8	With ø8 One-touch fitting	
N7	With ø1/4" One-touch fitting	Inch
N9	With ø5/16" One-touch fitting	

*: If an inch size cylinder port is selected, select inch size piping connections for the P and R ports as well.

❹ SI Unit specifications

(output polarity, protocol, number of outputs, communication connector)

Symbol (output polarity) Positive common (NPN)	Negative common (NPN)	Protocol	Number of outputs	Communication connector
SD0*1		Without SI unit		
SQA	SQAN	DeviceNet®	32	M12
SQB	SQAN		16	
SNA	SNAN	PROFIBUS DP	32	M12
SNB	SNBN		16	
SNC	SNCN		32	*4 D-sub
SND	SNDN		16	
SVA	SVAN	CC-Link	32	M12
SVB	SVBN		16	
SDA	SDAN	EtherCAT	32	M12
SDB	SDBN		16	
SFA	SFAN	PROFINET	32	M12
SFB	SFBN		16	
SEA	SEAN	EtherNet/IP™	32	M12
SEB	SEBN		16	
—*3	SGAN	Ethernet POWERLINK	32	M12
—*3	SGBN		16	

*1: Without SI Unit, the output polarity is decied by the SI unit used.
*2: DIN rail cannot be mounted without SI Unit.
*3: Positive common (NPN) type is not applicble.
*4: IP40 for the D-sub applicable communication connector specification.
*5: The maximum number of stations is determined by the total number of solenoids. For mixed single and double wirings,enter -K to the order code options.
*6: For SI unit part number, refer to page 1027.

Type of actuation	Single	Double, Dual 3-port
Number of solenoids	1	2

❺ Option

Symbol	Specifications
Nil	None
B*1	With back pressure check valve (All stations)
D	With DIN rail (Rail length: Standard)
D0	Without DIN rail (with bracket)
D□*2	With DIN rail Designated length (□: Station)
K*3	Special wiring specifications (Except double wiring)
N	With name plate
R*4	External pilot
S	Built-in silencer

*1: When installing a back pressure check valve on the required station, enter the part number and specify the station position on the manifold specification sheet.
*2: The available number of stations is larger than the number of manifold stations.
*3: Indicate the wiring specifications for mixed single and double wirings.
*4: For details, refer to page 1030.
*: When two or more options are specified, indicate them alphabetically. Example) -BKN
*: **For manifold optional parts, refer to pages 1030 to 1036.**
*: **For manifold exploded view, refer to page 1026.**
*: **When the SD0 (Without SI unit) is specified, -D, -D□ cannot be selected.**

Refer to pages 1311 to 1339 and the Operation Manual for the details of the EX260 Integrated-type (For Output) Serial Transmission System. Please download the Operation Manual via our website, https://www.smcworld.com

How to Order Valves

S07 1 0 □ – 5

Type of actuation

Symbol	Specifications
1	2-position single
2	2-position double
A	4-position dual 3-port (N.C. + N.C.) [Exhaust center]
B	4-position dual 3-port (N.O. + N.O.) [Pressure center]
C	4-position dual 3-port (N.C. + N.O.)

*: For symbol, refer to page 972.

Function

Symbol	Specifications
Nil	Standard
R	External pilot*1

*1: Not compatible with dual 3-port valves. The 3(R) port is open to the atmosphere. (Cannot be used for applying pressure or vacuum)

Voltage: 24 VDC

Base mounted plug-in

How to Order Manifold Assembly

Example Serial transmission kit

Specify the part numbers for valves and options together beneath the manifold base part number.

SS0750-04C4C8SNAN··· 1 set – Manifold base part no.
* S0720-5 ····· 4 sets – Valve part no. (Stations 1 to 4)

Prefix the asterisk to the part numbers of the solenoid valve etc.

Write sequentially from the 1st station on the D side. When part numbers written collectively are complicated, specify on the manifold specification sheet.

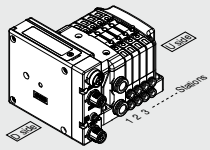

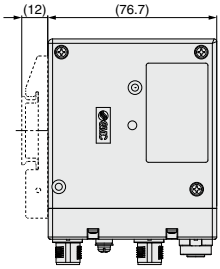

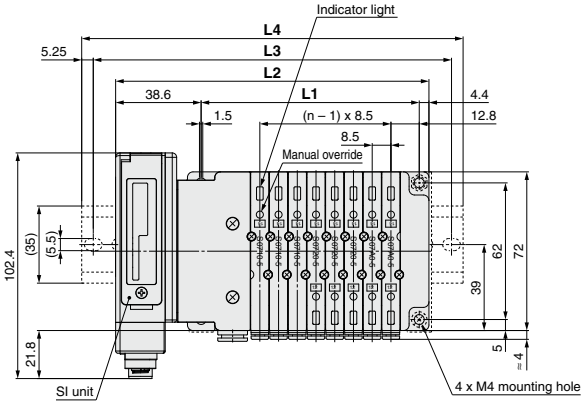

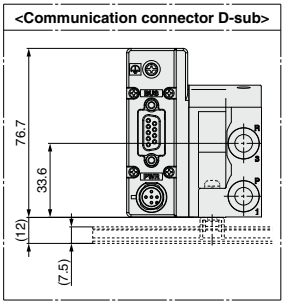

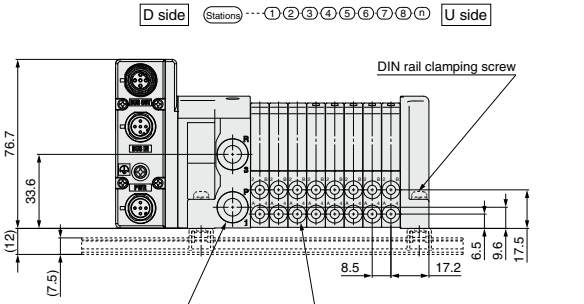

2 x C6, C8, N7, N9 (1(P), 3(R) port)
- C6: ø6 One-touch fitting
- C8: ø8 One-touch fitting
- N7: ø1/4" One-touch fitting
- N9: ø5/16" One-touch fitting

2n x C2, C3, C4, N1, N3 (4(A), 2(B) port)
- C2: ø2 One-touch fitting
- C3: ø3.2 One-touch fitting
- C4: ø4 One-touch fitting
- N1: ø1/8" One-touch fitting
- N3: ø5/32" One-touch fitting

Dimensions

Formula L1 = 8.5n + 31, L2 = 8.5n + 74 n: Station (Maximum 24 stations)

L \ n	1	2	3	4	5	6	7	8	9	10	11	12	13	14	15	16
L1	39.5	48	56.5	65	73.5	82	90.5	99	107.5	116	124.5	133	141.5	150	158.5	167
L2	82.5	91	99.5	108	116.5	125	133.5	142	150.5	159	167.5	176	184.5	193	201.5	210
L3	112.5	112.5	125	137.5	137.5	150	162.5	162.5	175	187.5	187.5	200	212.5	212.5	225	237.5
L4	123	123	135.5	148	148	160.5	173	173	185.5	198	198	210.5	223	223	235.5	248

L \ n	17	18	19	20	21	22	23	24
L1	175.5	184	192.5	201	209.5	218	226.5	235
L2	218.5	227	235.5	244	252.5	261	269.5	278
L3	250	250	262.5	275	275	287.5	300	300
L4	260.5	260.5	273	285.5	285.5	298	310.5	310.5

Plug-in Type

S0700 Series Stacking Base Kit (Serial Transmission)

EX250 (For Input/Output) Serial Transmission System

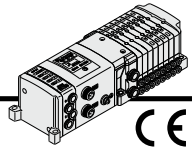

How to Order Manifold

SS0750 – 08 C4 C8 SDQ N □ □ □ – B

❶ ❷ ❸ ❹ ❺ ❻ ❼ ❽ ❾

❶ Stations

Symbol	Stations
01	1 station
⋮	⋮
24*1	24 stations

*1: The maximum number of stations will be different depending on the wiring specifications.

❷ Cylinder port size

Symbol	Port size	
C2	With ø2 One-touch fitting	Metric
C3	With ø3.2 One-touch fitting	
C4	With ø4 One-touch fitting	
CM	Mixed sizes and with port plug*1	
N1	With ø1/8" One-touch fitting	Inch
N3	With ø5/32" One-touch fitting	
NM	Mixed sizes and with port plug*1	

*1: Specify "Mixed sizes and with port plug" on the manifold specification sheet.

❸ P, R port size

Symbol	Port size	
C6	With ø6 One-touch fitting	Metric
C8	With ø8 One-touch fitting	
N7	With ø1/4" One-touch fitting	Inch
N9	With ø5/16" One-touch fitting	

*: If an inch size cylinder port is selected, select inch size piping connections for the P and R ports as well.

❹ Kit type

Kit type		Symbol*1	Specifications	Standard station	Max. number of stations for special wiring specifications	Max. number of solenoids
S kit	For I/O serial transmission	SD0	Without SI unit	1 to 16 stations	24*2 stations	32
		SDQ	DeviceNet®			
		SDZEN	EtherNet/IP™			
		SDTA	AS-Interface, 8 in/8 out, 2 isolated common type	1 to 4 stations	8 stations	8
		SDTB	AS-Interface, 4 in/4 out, 2 isolated common type	1 to 2 stations	4 stations	4
		SDTC	AS-Interface, 8 in/8 out, 1 common type	1 to 4 stations	8 stations	8
		SDTD	AS-Interface, 4 in/4 out, 1 common type	1 to 2 stations	4 stations	4

*1: For SI unit part number, refer to page 1027.
*2: Up to 24 stations due to the structure of the manifold. Please note the maximum number of stations is 24 for single wiring, too.
*: The maximum number of stations is determined by the total number of solenoids.
For mixed single and double wirings, enter -K to the order code options.

Type of actuation	Single	Double, Dual 3-port
Number of solenoids	1	2

❺ SI unit output polarity

SI unit common		EX250		
		DeviceNet®	AS-Interface	EtherNet/IP™
Nil	Positive common	—	—	—
N	Negative common	○	○	○

*: Without SI unit (SD0), the symbol is nil.

❻ Input block (for I/O unit only)

Symbol	Specifications
Nil	SI unit/Input block: None (SD0)
0	Input block: None
1	Input block: 1 pc.
⋮	⋮
8	Input block: 8 pcs.

*: Without SI unit (SD0), the symbol is nil.

❼ Input block type (for I/O unit only)

Symbol	Specifications
Nil	Input block: None
1	M12 2 inputs
2	M12 4 inputs
3	M8 4 inputs (3 pins)

*: Without SI unit (SD0), the symbol is nil.

❽ Input block specification (for I/O unit only)

Symbol	Specifications
Nil	PNP sensor input or without input block
N	NPN sensor input

*: Without SI unit (SD0), the symbol is nil.

❾ Option

Symbol	Specifications
Nil	None
B*1	With back pressure check valve (All stations)
D*5	With DIN rail (Rail length: Standard)
D0*5	Without DIN rail (With bracket)
D□*2 *5	With DIN rail Designated length (□: Station)
K*3	Special wiring specifications (Except double wiring)
N	With name plate
R*4	External pilot
S	Built-in silencer

*1: When installing a back pressure check valve on the required station, enter the part number and specify the station position on the manifold specification sheet.
*2: The available number of stations is larger than the number of manifold stations.
*3: Indicate the wiring specifications for mixed single and double wirings.
*4: For details, refer to page 1030.
*5: When the SD0 (Without SI unit) is specified, -D, -D□ cannot be selected.
*: When two or more options are specified, indicate them alphabetically. Example) -BKN
*: **For manifold optional parts, refer to pages 1030 to 1036.**
*: **For manifold exploded view, refer to page 1026.**

Refer to pages 1341 to 1364 and the Operation Manual for the details of the EX250 Integrated-type (For Output) Serial Transmission System. Please download the Operation Manual via our website, https://www.smcworld.com

How to Order Manifold Assembly

Example Serial transmission kit

Specify the part numbers for valves and options together beneath the manifold base part number.

SS0750-08C4C8SDQN13N··· 1 set – Manifold base part no.
* **S0710-5** ····· 3 sets – Valve part no. (Stations 1 to 3)
* **S0720-5** ····· 2 sets – Valve part no. (Stations 4 to 5)
* **S07A0-5**····· 2 sets – Valve part no. (Stations 6 to 7)
* **SS0700-10A-1** ····· 1 set – Blanking plate part no. (Station 8)

Prefix the asterisk to the part numbers of the solenoid valve etc.

Write sequentially from the 1st station on the D side. When part numbers written collectively are complicated, specify on the manifold specification sheet.

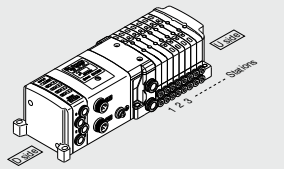

How to Order Valves

S07 1 0 □ – 5

Type of actuation

Symbol	Specifications
1	2-position single
2	2-position double
A	4-position dual 3-port (N.C. + N.C.) [Exhaust center]
B	4-position dual 3-port (N.O. + N.O.) [Pressure center]
C	4-position dual 3-port (N.C. + N.O.)

*: For symbol, refer to page 972.

Base mounted plug-in

Function

Symbol	Specifications
Nil	Standard
R	External pilot*1

*1: Not compatible with dual 3-port valves. The 3(R) port is open to the atmosphere. (Cannot be used for applying pressure or vacuum)

Voltage: 24 VDC

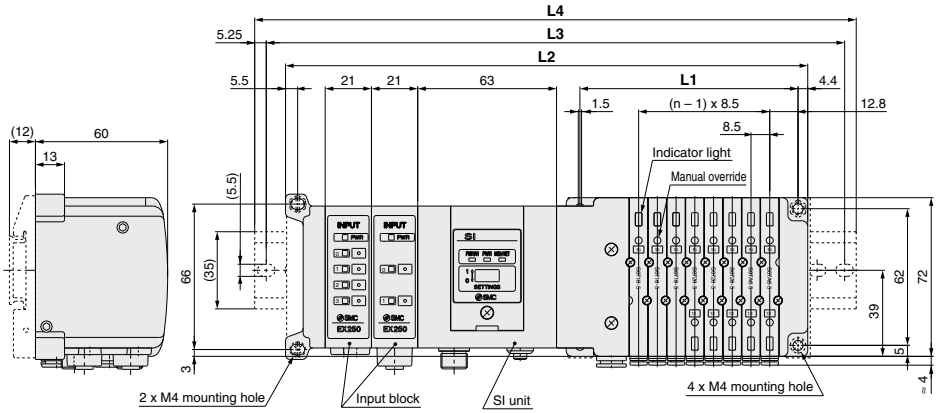

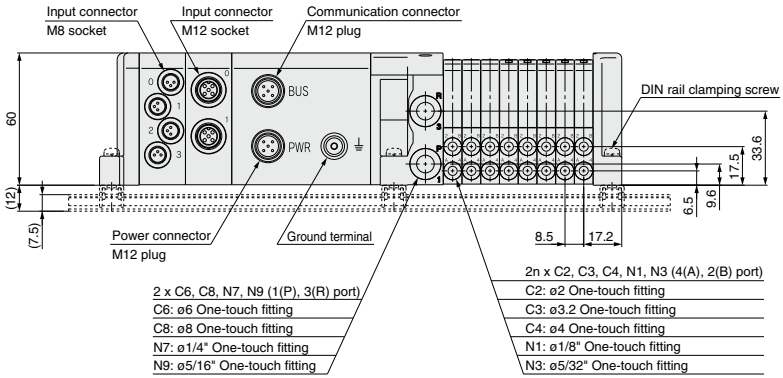

Dimensions

Formula L1 = 8.5n + 31, L2 = 8.5n + 169 (In the case of 2 input blocks, 21 mm is added per 1 pc.) n: Station (Maximum 24 stations)

L \ n	2	3	4	5	6	7	8	9	10	11	12	13	14	15	16
L1	48	56.5	65	73.5	82	90.5	99	107.5	116	124.5	133	141.5	150	158.5	167
L2	186	194.5	203	211.5	220	228.5	237	245.5	254	262.5	271	279.5	288	296.5	305
L3	212.5	225	225	237.5	250	250	262.5	275	275	287.5	300	300	312.5	325	325
L4	223	235.5	235.5	248	260.5	260.5	273	285.5	285.5	298	310.5	310.5	323	335.5	335.5

L \ n	17	18	19	20	21	22	23	24
L1	175.5	184	192.5	201	209.5	218	226.5	235
L2	313.5	322	330.5	339	347.5	356	364.5	373
L3	337.5	350	350	362.5	375	387.5	387.5	400
L4	348	360.5	360.5	373	385.5	398	398	410.5

Plug-in Type

S0700 Series Stacking Base

Kit (Serial Transmission) EX600 (For Input/Output) Serial Transmission System (Fieldbus System)

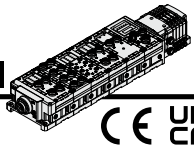

How to Order Manifold

SS0750 – 08 C4 SD6Q 2 N 1 – B

Stations

Symbol	Stations
01	1 station
⋮	⋮
24*1	24 stations

*1: Max. number of stations depends on the wiring specifications.

Cylinder port size

Symbol	Port size	
C2	With ø2 One-touch fitting	Metric
C3	With ø3.2 One-touch fitting	
C4	With ø4 One-touch fitting	
CM	Mixed sizes and with port plug*1	
N1	With ø1/8" One-touch fitting	Inch
N3	With ø5/32" One-touch fitting	
NM	Mixed sizes and with port plug*1	

*1: Indicate the sizes on the manifold specification sheet in the case of CM and NM.

Kit type

Kit type	Symbol	Specifications	Standard station	Max. number of stations for special wiring specifications	Max. number of solenoids
S kit	SD60	Without SI unit	1 to 16 stations	24 stations*1	32
	SD6Q	DeviceNet®			
	SD6N	PROFIBUS DP			
	SD6V	CC-Link			
	SD6F	PROFINET			
	SD6EA	EtherNet/IP™ (2 ports)			
	SD6WE	EtherNet/IP™ compatible wireless base*2			
	SD6WF	PROFINET compatible wireless base*2			
	SD6WS	Wireless remote*2			

*1: Up to 24 stations due to the structure of the manifold. Please note the maximum number of stations is 24 for single wiring, too.
*2: The wireless system is suitable for use only in a country where it is in accordance with the Radio Act and regulations of that country.
*: Max. station number depends on the number of solenoid valve. Add the option symbol -K when the combination of single wiring and double wiring is specified.
- When Without SI unit is specified, valve plate to connect the manifold and SI unit is not mounted. Refer to page 1044 for mounting method.
- I/O unit cannot be chosen without SI unit.

*: For SI unit part number, refer to page 1027.

Type of actuation	Single	Double, Dual 3-port
Number of solenoid valves	1	2

Option

Symbol	Specifications
Nil	None
B*1	With back pressure check valve (All sta.)
D*4	With DIN rail (Rail length: Standard)
D0*4	With DIN rail bracket (Without rail)
D□*2 *4	With DIN rail length specified (□: Sta.)
K*3	Special wiring specifications (Except double wiring)
N	With name plate
R*5	External pilot
S	Built-in silencer

*1: When back pressure check valve is used only for specified station, specify back pressure check valve part number, and specify station number to which the valve is mounted on the manifold specification sheet.
*2: Specified station number shall be longer than manifold station number.
*3: When single wiring and double wiring are mixed, specify wiring type of each station with the manifold specification sheet.
*4: When Without SI unit (SD60) is specified, -D, -D□ cannot be selected.
*5: For details, refer to page 1030.
*: When two or more symbols are specified, indicate them alphabetically. Example) -BKN

I/O unit station number

Nil	None
1	1 station
⋮	⋮
9	9 stations

*: Without SI unit, the symbol is nil.
*: SI unit is not included in I/O unit station number.
*: When I/O unit is selected, it is shipped separately, and assembled by customer. Refer to the attached operation manual for mounting method.

SI unit output polarity

Nil	Positive common
N	Negative common

*: Without SI unit the symbol is nil.

End plate type

Nil	No end plate
2	M12 power supply connector, B-coded
3	7/8 inch power supply connector
4	M12 power supply connector IN/OUT, A-coded Pin arrangement 1
5	M12 power supply connector IN/OUT, A-coded Pin arrangement 2

*: Without SI Unit, the symbol is nil.
*: The pin layout for “4” and “5” pin connector is different.

Refer to pages 1393 to 1440 and the Operation Manual for the details of the EX600 Integrated-type (For Output) Serial Transmission System. Please download the Operation Manual via our website, https://www.smcworld.com

How to Order Manifold Assembly (Example)

Example

Serial transmission kit

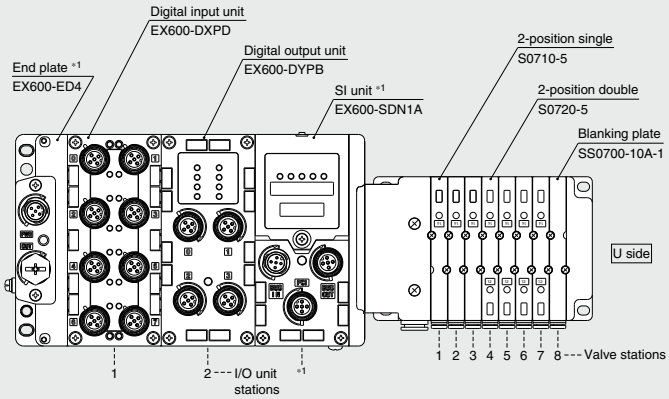

For the I/O unit part number mounted, refer to the **Web Catalog**.

- Digital input unit
- Digital output unit
- Digital I/O unit
- Analog input unit
- Analog output unit
- Analog I/O unit

Serial transmission kit

SS0750-08C4SD6Q4N2	**1 set**	**Manifold base part number**	Enter in order starting from the first station on the D side. If arrangement becomes complicated, specify on a manifold specification sheet.
∗ **S0710-5**	**3 sets**	**Valve part number (Stations 1 to 3)**	
∗ **S0720-5**	**4 sets**	**Valve part number (Stations 4 to 7)**	
∗ **SS0700-10A-1**	**1 set**	**Blanking plate number (Station 8)**	
∗ **EX600-DXPD**	**1 set**	**I/O unit part number (Station 1)**	Enter in order starting from the first station on the D side.
∗ **EX600-DYPB**	**1 set**	**I/O unit part number (Station 2)**	

The asterisk denotes the symbol for assembly.
Prefix it to the part nos. of the solenoid valve, etc.

∗1: Do not enter the SI unit part number and the end plate part number together.

How to Order Valves

S07 1 0 □ – 5

Type of actuation

1	2-position single 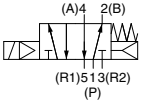	**A**	4-position dual 3-port valve (N.C. + N.C.) [Exhaust center] 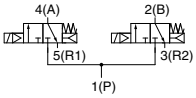
2	2-position double 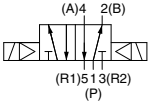	**B**	4-position dual 3-port valve (N.O. + N.O.) [Pressure center] 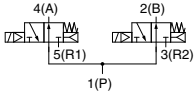
		C	4-position dual 3-port valve (N.C. + N.O.) 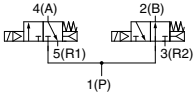

Coil voltage

5	24 VDC

Function

Symbol	Specifications
Nil	Standard
R	External pilot *1

∗1: Not compatible with dual 3-port valves.

Base mounted plug-in

Power Supply with M12 Connector

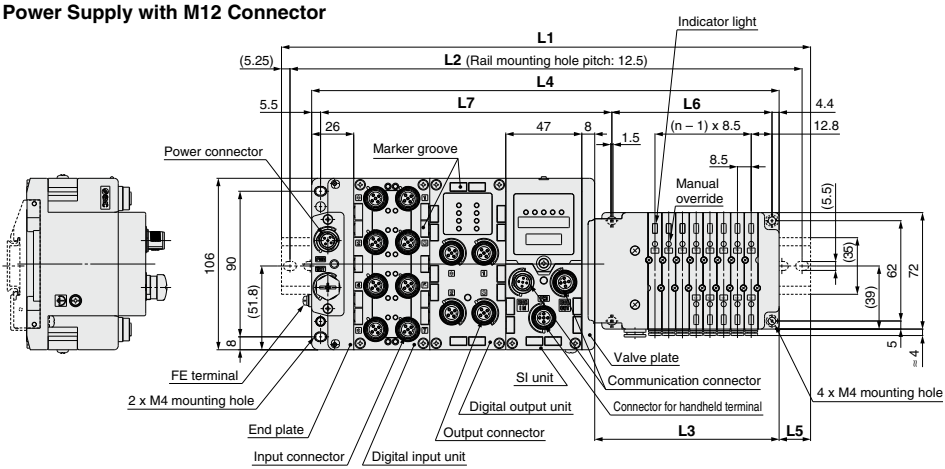

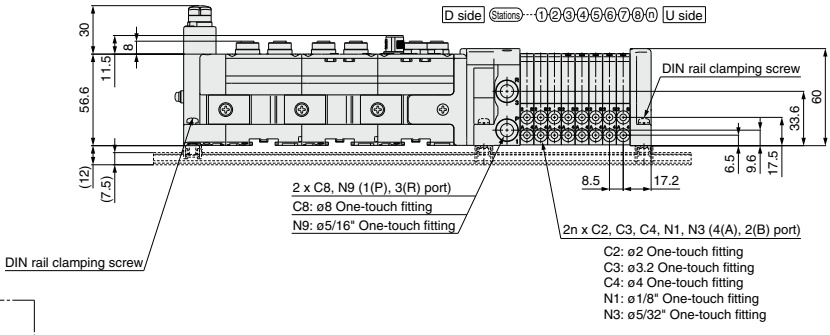

L2 = L1 – 10.5
L3 = 8.5 x n1 + 46
L4 = L3 + 81 + 47 x n2
L5 = (L1 – L4)/2
L6 = 8.5 x n1 + 31
L7 = 47 x n2 + 86.1

L1: DIN Rail Overall Length

I/O unit stations (n2) \ Valve stations (n1)	1	2	3	4	5	6	7	8	9	10	11	12	13	14	15	16	17	18	19	20	21	22	23	24
0	173	185.5	185.5	198	210.5	210.5	223	235.5	235.5	248	260.5	260.5	273	285.5	285.5	298	310.5	310.5	323	335.5	335.5	348	360.5	373
1	223	223	235.5	248	248	260.5	273	273	285.5	298	298	310.5	323	323	335.5	348	360.5	360.5	373	385.5	385.5	398	410.5	410.5
2	260.5	273	285.5	285.5	298	310.5	310.5	323	335.5	348	348	360.5	373	373	385.5	398	398	410.5	423	423	435.5	448	448	460.5
3	310.5	323	335.5	335.5	348	360.5	360.5	373	385.5	385.5	398	410.5	410.5	423	435.5	435.5	448	460.5	460.5	473	485.5	485.5	498	510.5
4	360.5	373	373	385.5	398	398	410.5	423	423	435.5	448	448	460.5	473	473	485.5	498	498	510.5	523	535.5	535.5	548	560.5
5	410.5	410.5	423	435.5	435.5	448	460.5	460.5	473	485.5	485.5	498	510.5	523	523	535.5	548	548	560.5	573	573	585.5	598	598
6	448	460.5	473	473	485.5	498	510.5	510.5	523	535.5	535.5	548	560.5	560.5	573	585.5	585.5	598	610.5	610.5	623	635.5	635.5	648
7	498	510.5	523	523	535.5	548	548	560.5	573	573	585.5	598	598	610.5	623	623	635.5	648	648	660.5	673	673	685.5	698
8	548	560.5	560.5	573	585.5	585.5	598	610.5	610.5	623	635.5	635.5	648	660.5	660.5	673	685.5	698	698	710.5	723	723	735.5	748
9	598	598	610.5	623	623	635.5	648	648	660.5	673	685.5	685.5	698	710.5	710.5	723	735.5	735.5	748	760.5	760.5	773	785.5	785.5

Power Supply with 7/8 Inch Connector

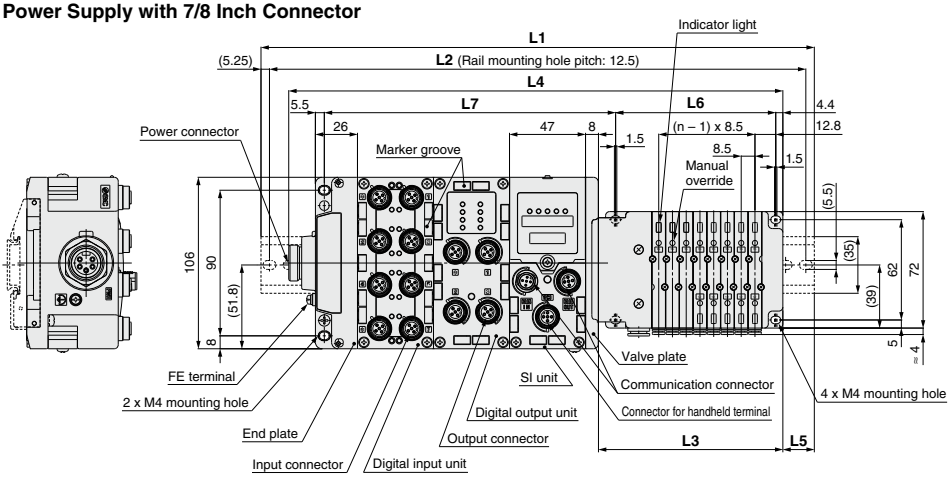

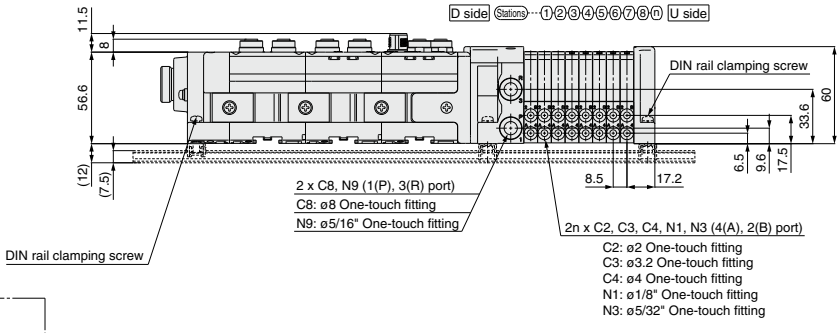

L2 = L1 – 10.5
L3 = 8.5 x n1 + 46
L4 = L3 + 97.5 + 47 x n2
L5 = (L1 – L4)/2
L6 = 8.5 x n1 + 31
L7 = 47 x n2 + 86.1

L1: DIN Rail Overall Length

I/O unit stations (n2) \ Valve stations (n1)	1	2	3	4	5	6	7	8	9	10	11	12	13	14	15	16	17	18	19	20	21	22	23	24
0	185.5	198	210.5	210.5	223	235.5	235.5	248	260.5	260.5	273	285.5	285.5	298	310.5	310.5	323	335.5	335.5	348	360.5	360.5	373	385.5
1	235.5	248	248	260.5	273	273	285.5	298	298	310.5	323	323	335.5	348	348	360.5	373	385.5	385.5	398	410.5	410.5	423	435.5
2	285.5	285.5	298	310.5	310.5	323	335.5	335.5	348	360.5	373	373	385.5	398	398	410.5	423	423	435.5	448	448	460.5	473	473
3	323	335.5	348	360.5	360.5	373	385.5	385.5	398	410.5	410.5	423	435.5	435.5	448	460.5	460.5	473	485.5	485.5	498	510.5	510.5	523
4	373	385.5	398	398	410.5	423	423	435.5	448	448	460.5	473	473	485.5	498	498	510.5	523	523	535.5	548	560.5	560.5	573
5	423	435.5	435.5	448	460.5	460.5	473	485.5	485.5	498	510.5	510.5	523	535.5	548	548	560.5	573	573	585.5	598	598	610.5	623
6	473	473	485.5	498	498	510.5	523	535.5	535.5	548	560.5	560.5	573	585.5	585.5	598	610.5	610.5	623	635.5	635.5	648	660.5	660.5
7	523	523	535.5	548	548	560.5	573	573	585.5	598	598	610.5	623	623	635.5	648	648	660.5	673	673	685.5	698	698	710.5
8	560.5	573	585.5	585.5	598	610.5	610.5	623	635.5	635.5	648	660.5	660.5	673	685.5	685.5	698	710.5	723	723	735.5	748	748	760.5
9	610.5	623	623	635.5	648	648	660.5	673	673	685.5	698	710.5	710.5	723	735.5	735.5	748	760.5	760.5	773	785.5	785.5	798	810.5

Plug-in Type

S0700 Series Stacking Base Kit (Serial Transmission)

EX500 Gateway Decentralized System 2

How to Order Manifold

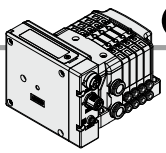

SS0750 – 08 C4 C8 SDA3 N – B

❶ ❷ ❸ ❹ ❺ ❻

❶ Valve stations

	Stations	Note
01	1 station	Double wiring
⋮	⋮	
16	16 stations	
01	1 station	Specified layout*1 (Available up to 32 solenoids)
⋮	⋮	
24	24 stations	

*1: Specified layout: Indicate the wiring specifications on the manifold specification sheet. (Note that 2-position double, 3-position and 4-position valves cannot be used where single wiring has been specified.) In addition, select the option K.

❷ A, B port size

Metric size

C2	ø2 One-touch fitting
C3	ø3.2 One-touch fitting
C4	ø4 One-touch fitting
CM*1	Mixed sizes and port plug

Inch size

N1	ø1/8" One-touch fitting
N3	ø5/32" One-touch fitting
NM*1	Mixed sizes and port plug

*1: Indicate the sizes on the manifold specification sheet.

❸ P, R port size

Metric size

C6	ø6 One-touch fitting
C8	ø8 One-touch fitting

Inch size

N7	ø1/4" One-touch fitting
N9	ø5/16" One-touch fitting

*: If an inch size cylinder port is selected, select inch size piping connections for the P and R ports as well.

❹ SI unit (Number of outputs, Max. number of valve stations)

SD0	Without SI unit
SDA3	32 outputs*1, 2, 1 to 16 stations (24 stations*3)

*1: When using the SI unit with 32 outputs, use the GW unit compatible with the EX500 Gateway Decentralized System 2 (128 points).
*2: 16 outputs can be set by switching the built-in setting switch.
*3: ( ): Maximum number of stations for mixed single and double wiring.
*: For SI unit part number, refer to page 1028.

❺ SI unit (Output polarity)

Nil	(Without SI unit)
N	Negative common

❻ Option

Nil	None
B*1	With back pressure check valve (All stations)
D*5	With DIN bracket, DIN rail with standard length
D0*5	With DIN bracket, without DIN rail
D□*2 *5	With DIN bracket, DIN rail for □ stations
K*3	Special wiring specification (Except double wiring)
N	With name plate
R*4	External pilot
S	Built-in silencer

*1: When a back pressure check valve is used only for specified station, specify the back pressure check valve part number, and specify the station number to which the valve is mounted, on the manifold specification sheet.
*2: □: Specify a longer rail than the length of valve stations.
Example) -D08
In this case, the valves will be mounted on the DIN rail for 8 stations, regardless of the number of manifold stations.
*3: When single wiring and double wiring are mixed, specify wiring type of each station on the manifold specification sheet.
*4: For details, refer to page 1030.
*5: When the SD0 (Without SI unit) is specified, -D, -D□ cannot be selected.
*: When multiple symbols are specified, indicate them alphabetically. Example) -BKN
*: **For manifold optional parts, refer to pages 1030 to 1036.**
*: **For manifold exploded view, refer to page 1026.**

How to Order Manifold Assembly

Example Serial transmission kit

Specify the part numbers for valves and options together beneath the manifold base part number.

SS0750-04C4C8SDA3 ··· 1 set – Manifold base part no.
*** S0720-5 ····· 2 sets – 2-position double part no.**
*** S07A0-5 ····· 2 sets – 4-position dual 3-port part no.**

Prefix the asterisk to the part numbers of the solenoid valve etc.

Write sequentially from the 1st station on the D side. When part numbers written collectively are complicated, specify on the manifold specification sheet.

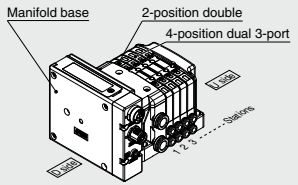

How to Order Valves

S07 1 0 □ – 5

Type of actuation

Symbol	Specifications
1	2-position single
2	2-position double
A	4-position dual 3-port (N.C. + N.C.) [Exhaust center]
B	4-position dual 3-port (N.O. + N.O.) [Pressure center]
C	4-position dual 3-port (N.C. + N.O.)

*: For symbol, refer to page 972.

Base mounted plug-in

Function

Symbol	Specifications
Nil	Standard
R	External pilot*1

*1: Not compatible with dual 3-port valves.
The 3(R) port is open to the atmosphere.
(Cannot be used for applying pressure or vacuum)

Voltage: 24 VDC

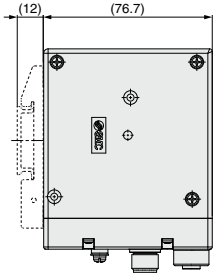

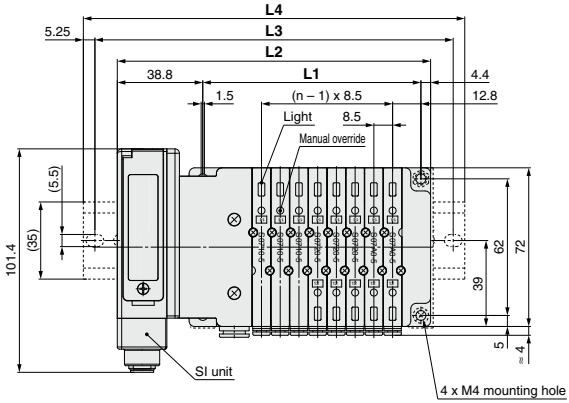

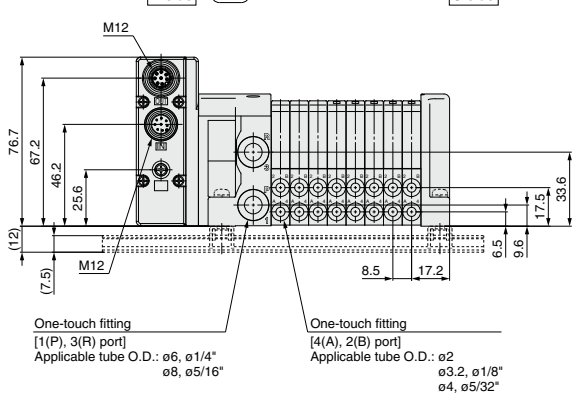

Dimensions

Formula L1 = 8.5n + 31, L2 = 8.5n + 74 n: Station (Maximum 24 stations)

L \ n	1	2	3	4	5	6	7	8	9	10	11	12	13	14	15	16
L1	39.5	48	56.5	65	73.5	82	90.5	99	107.5	116	124.5	133	141.5	150	158.5	167
L2	82.5	91	99.5	108	116.5	125	133.5	142	150.5	159	167.5	176	184.5	193	201.5	210
L3	112.5	112.5	125	137.5	137.5	150	162.5	162.5	175	187.5	187.5	200	212.5	212.5	225	237.5
L4	123	123	135.5	148	148	160.5	173	173	185.5	198	198	210.5	223	223	235.5	248

L \ n	17	18	19	20	21	22	23	24
L1	175.5	184	192.5	201	209.5	218	226.5	235
L2	218.5	227	235.5	244	252.5	261	269.5	278
L3	250	250	262.5	275	275	287.5	300	300
L4	260.5	260.5	273	285.5	285.5	298	310.5	310.5

Plug-in Type Stacking Base

D-sub Connector

F Kit

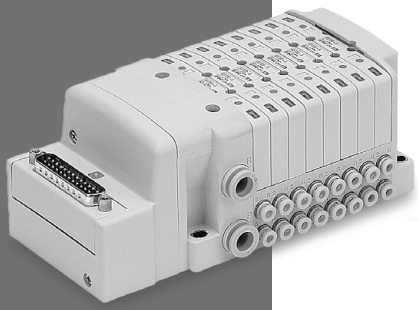

MIL Standard

- 25 pins
- Cable length: 1.5 m, 3 m, 5 m

Connector mounting direction: top or side selectable

Page 1006

Plug-in Type

F S0700 Series Stacking Base Kit (D-sub Connector)

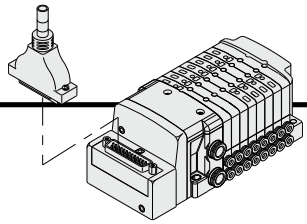

- **The D-sub connector reduces installation labor for electrical connections.**
- **Using the D-sub connector (25P), conforming to MIL standard permits the use of connectors put on the market and gives a wide interchangeability.**
- **Top or side receptacle position can be selected in accordance with the available mounting space.**

Electrical Wiring Specifications

D-sub connector

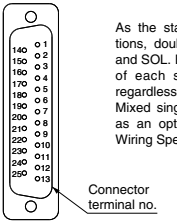

As the standard electrical wiring specifications, double wiring (connected to SOL. A and SOL. B) is adopted for the internal wiring of each station for 12 stations or less, regardless of valve and option types.
Mixed single and double wiring is available as an option. For details, refer to Special Wiring Specifications (Option) below.

D-sub connector assembly wire color (**AXT100-DS25-** 015 / 030 / 050)

		Terminal no.	Polarity		Lead wire color	Dot marking
Station 1	SOL.A	1	(–)	(+)	Black	None
	SOL.B	14	(–)	(+)	Yellow	Black
Station 2	SOL.A	2	(–)	(+)	Brown	None
	SOL.B	15	(–)	(+)	Pink	Black
Station 3	SOL.A	3	(–)	(+)	Red	None
	SOL.B	16	(–)	(+)	Blue	White
Station 4	SOL.A	4	(–)	(+)	Orange	None
	SOL.B	17	(–)	(+)	Purple	None
Station 5	SOL.A	5	(–)	(+)	Yellow	None
	SOL.B	18	(–)	(+)	Gray	None
Station 6	SOL.A	6	(–)	(+)	Pink	None
	SOL.B	19	(–)	(+)	Orange	Black
Station 7	SOL.A	7	(–)	(+)	Blue	None
	SOL.B	20	(–)	(+)	Red	White
Station 8	SOL.A	8	(–)	(+)	Purple	White
	SOL.B	21	(–)	(+)	Brown	White
Station 9	SOL.A	9	(–)	(+)	Gray	Black
	SOL.B	22	(–)	(+)	Pink	Red
Station 10	SOL.A	10	(–)	(+)	White	Black
	SOL.B	23	(–)	(+)	Gray	Red
Station 11	SOL.A	11	(–)	(+)	White	Red
	SOL.B	24	(–)	(+)	Black	White
Station 12	SOL.A	12	(–)	(+)	Yellow	Red
	SOL.B	25	(–)	(+)	White	None
	COM.	13	(+)	(–)	Orange	Red
			Positive COM	Negative COM*1		

*1: Mounting valve has no polarity. It can also be used as a negative common.

Special Wiring Specifications (Option) [-K]

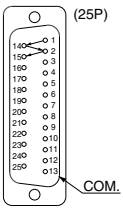

Mixed single and double wiring are available as an option. The maximum number of manifold stations is determined by the number of solenoids. Count one point for a single solenoid type and two points for a double solenoid type. The total number of solenoids (points) must not exceed 24.

1. How to Order valves
Indicate an option symbol, -K, for the manifold part number and be sure to specify the mounting position and number of stations of the single and double wiring on the manifold specification sheet.

2. Wiring specifications
Connector terminal numbers are connected from solenoid station 1 on the A side in the order indicated by the arrows without skipping any terminal numbers.

Cable Assembly

AXT100-DS25- 015 / 030 / 050

(The D-sub connector cable assemblies can be ordered with manifolds. Refer to How to Order Manifold.)

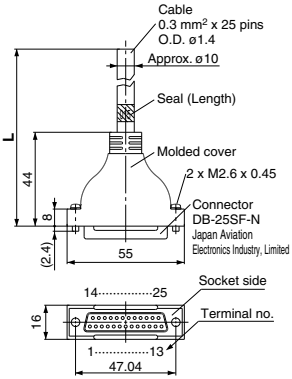

D-sub Connector Cable Assembly (Option)

Cable length (**L**)	Assembly part no.	Note
1.5 m	AXT100-DS25-015	Cable 0.3 mm² x 25 cores
3 m	AXT100-DS25-030	
5 m	AXT100-DS25-050	

*: For other commercial connectors, use a 25-pin type with female connector conforming to MIL-C-24308.
*: Cannot be used for movable wiring.

D-sub connector cable assembly Wire Color by Terminal No.

Terminal no.	Lead wire color	Dot marking
1	Black	None
2	Brown	None
3	Red	None
4	Orange	None
5	Yellow	None
6	Pink	None
7	Blue	None
8	Purple	White
9	Gray	Black
10	White	Black
11	White	Red
12	Yellow	Red
13	Orange	Red
14	Yellow	Black
15	Pink	Black
16	Blue	White
17	Purple	None
18	Gray	None
19	Orange	Black
20	Red	White
21	Brown	White
22	Pink	Red
23	Gray	Red
24	Black	White
25	White	None

Electrical Characteristics

Item	Property
Conductor resistance Ω/km, 20°C	65 or less
Voltage limit V, 1 min, AC	1000
Insulation resistance MΩ/km, 20°C	5 or more

*: The minimum bending inner radius of D-sub connector cable is 20 mm.

Connector manufacturers' example

- Fujitsu Limited
- Japan Aviation Electronics Industry, Limited
- J.S.T. Mfg. Co., Ltd.
- HIROSE ELECTRIC CO., LTD.

How to Order Manifold

SS0750 – 08 C4 C8 FD1 – B

Stations

Symbol	Stations
01	1 station
⋮	⋮
24*1	24 stations

*1: The maximum number of stations will be different depending on the wiring specifications.

Cylinder port size

Symbol	Port size	
C2	With ø2 One-touch fitting	Metric
C3	With ø3.2 One-touch fitting	
C4	With ø4 One-touch fitting	
CM	Mixed sizes and with port plug*1	
N1	With ø1/8" One-touch fitting	Inch
N3	With ø5/32" One-touch fitting	
NM	Mixed sizes and with port plug*1	

*1: Indicate the sizes on the manifold specification sheet in the case of CM and NM.

P, R port size

Symbol	Port size	
C6	With ø6 One-touch fitting	Metric
C8	With ø8 One-touch fitting	
N7	With ø1/4" One-touch fitting	Inch
N9	With ø5/16" One-touch fitting	

*: If an inch size cylinder port is selected, select inch size piping connections for the P and R ports as well.

Kit type/Cable length

Kit type	Symbol	Specifications	Standard station	Max. number of stations for special wiring specifications	Max. number of solenoids
F kit	FD0	D-sub connector (25P), without cable	1 to 12 stations	24 stations	24
	FD1	D-sub connector (25P), with 1.5 m cable			
	FD2	D-sub connector (25P), with 3.0 m cable			
	FD3	D-sub connector (25P), with 5.0 m cable			

*: The maximum number of stations is determined by the total number of solenoids. For mixed single and double wirings, enter -K to the order code options.

Type of actuation	Single	Double, Dual 3-port
Number of solenoids	1	2

Option

Symbol	Specifications
Nil	None
B*1	With back pressure check valve (All sta.)
D	With DIN rail (Rail length: Standard)
D0	Without DIN rail (With bracket)
D□*2	With DIN rail Designated length (□: Station)
K*3	Special wiring specifications (Except double wiring)
N	With name plate
R*4	External pilot
S	Built-in silencer

*1: When installing a back pressure check valve on the required station, enter the part number and specify the station position on the manifold specification sheet.
*2: The available number of stations is larger than the number of manifold stations.
*3: Indicate the wiring specifications for mixed single and double wirings.
*4: For details, refer to page 1030.
*: When two or more options are specified, indicate them alphabetically. Example) -BKN
*: **For manifold optional parts, refer to pages 1030 to 1036.**
*: **For manifold exploded view, refer to page 1026.**

How to Order Valves

S07 1 0 □ – 5

Type of actuation

Symbol	Specifications
1	2-position single
2	2-position double
A	4-position dual 3-port (N.C. + N.C.) [Exhaust center]
B	4-position dual 3-port (N.O. + N.O.) [Pressure center]
C	4-position dual 3-port (N.C. + N.O.)

*: For symbol, refer to page 972.

Base mounted plug-in

Voltage

Symbol	Specifications
5	24 VDC
6	12 VDC

Function

Symbol	Specifications
Nil	Standard
R	External pilot*1

*1: Not compatible with dual 3-port valves. The 3(R) port is open to the atmosphere. (Cannot be used for applying pressure or vacuum)

How to Order Manifold Assembly

Example D-sub connector kit

Specify the part numbers for valves and options together beneath the manifold base part number.

SS0750-08C4C8FD1 ··· **1 set – Manifold base part no.**
* **S0710-5** ····· **3 sets – Valve part no. (Stations 1 to 3)**
* **S0720-5** ····· **2 sets – Valve part no. (Stations 4 to 5)**
* **S07A0-5**····· **2 sets – Valve part no. (Stations 6 to 7)**
* **SS0700-10A-1** ····· **1 set – Blanking plate part no. (Station 8)**

Prefix the asterisk to the part numbers of the solenoid valve etc.

Write sequentially from the 1st station on the D side. When part numbers written collectively are complicated, specify on the manifold specification sheet.

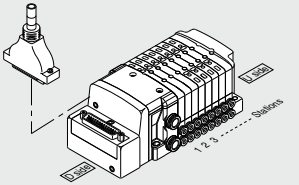

S0700 Series
Kit (D-sub Connector)

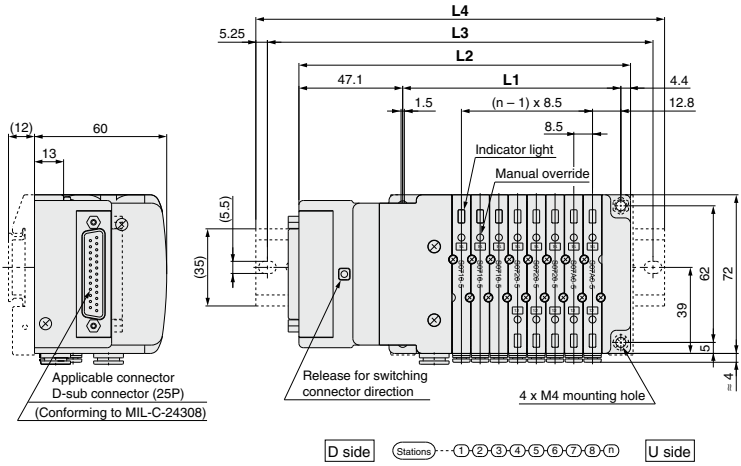

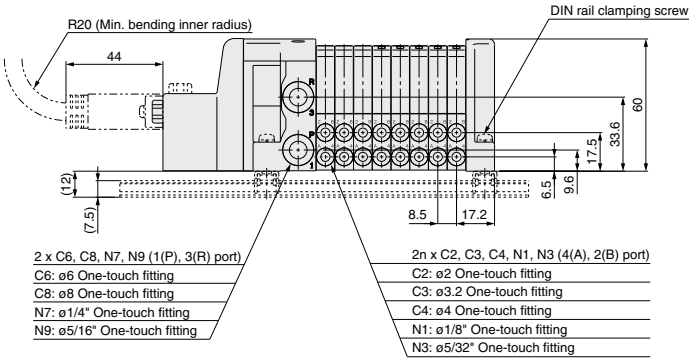

Dimensions

Formula L1 = 8.5n + 31, L2 = 8.5n + 82.5 n: Station (Maximum 24 stations)

L \ n	2	3	4	5	6	7	8	9	10	11	12	13	14	15	16	17	18	19	20	21	22	23	24
L1	48	56.5	65	73.5	82	90.5	99	107.5	116	124.5	133	141.5	150	158.5	167	175.5	184	192.5	201	209.5	218	226.5	235
L2	99.5	108	116.5	125	133.5	142	150.5	159	167.5	176	184.5	193	201.5	210	218.5	227	235.5	244	252.5	261	269.5	278	286.5
L3	125	137.5	137.5	150	162.5	162.5	175	187.5	187.5	200	212.5	212.5	225	237.5	250	250	262.5	275	275	287.5	300	300	312.5
L4	135.5	148	148	160.5	173	173	185.5	198	198	210.5	223	223	235.5	248	260.5	260.5	273	285.5	285.5	298	310.5	310.5	323

Plug-in Type Stacking Base

Flat Ribbon Cable

P Kit

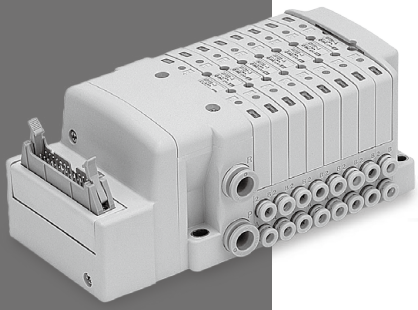

MIL Standard

- 26 pins, 20 pins
- Cable length: 1.5 m, 3 m, 5 m

Connector mounting direction: top or side selectable

Page 1010

Plug-in Type

P S0700 Series Stacking Base Kit (Flat Ribbon Cable)

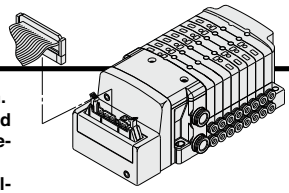

- **Flat ribbon cable connector reduces installation labor for electrical connection.**
- **Using the connector for flat ribbon cable (26P, 20P) conforming to MIL standard permits the use of connectors put on the market and gives a wide interchangeability.**
- **Top or side receptacle position can be selected in accordance with the available mounting space.**

Electrical Wiring Specifications

Flat ribbon cable connector

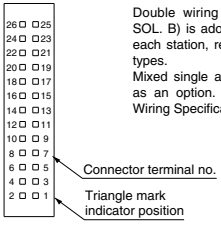

Double wiring (connected to SOL. A and SOL. B) is adopted for the internal wiring of each station, regardless of valve and option types.
Mixed single and double wiring is available as an option. For details, refer to Special Wiring Specifications (Option) below.

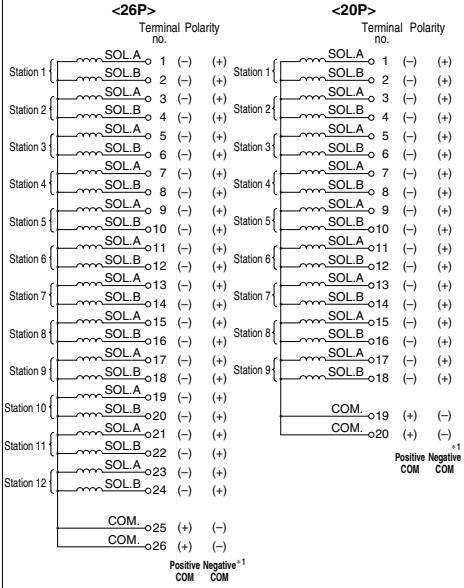

*1: Mounting valve has no polarity. It can also be used as a negative common.

Cable Assembly

AXT100-FC$^{20}_{26}$-$^{1}_{2}$$^{}_{3}$

(Type 26P flat ribbon cable connector assemblies can be ordered with manifolds. Refer to How to Order Manifold.)

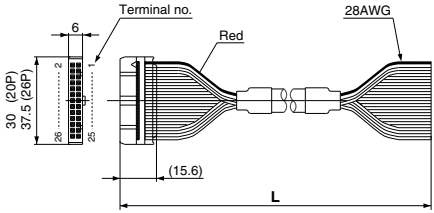

Flat Ribbon Cable Connector Assembly (Option)

Cable length (**L**)	Assembly part no.	
	26P	20P
1.5 m	AXT100-FC26-1	AXT100-FC20-1
3 m	AXT100-FC26-2	AXT100-FC20-2
5 m	AXT100-FC26-3	AXT100-FC20-3

*: For other commercial connectors, use a 20- or 26-pin type with strain relief conforming to MIL-C-83503.
*: Cannot be used for movable wiring.

Connector manufacturers' example

- HIROSE ELECTRIC CO., LTD.
- 3M Japan Limited
- Fujitsu Limited
- Japan Aviation Electronics Industry, Limited
- J.S.T. Mfg. Co., Ltd.
- Oki Electric Cable Co., Ltd.

Special Wiring Specifications (Option) [-K]

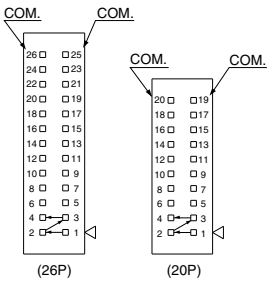

Mixed single and double wiring are available as an option. The maximum number of manifold stations is determined by the number of solenoids. Count one point for a single solenoid type and two points for a double solenoid type. The total number of solenoids (points) must not exceed 24 for 26P, 18 for 20P.

1. How to Order valves
Indicate an option symbol, -K, for the manifold part number and be sure to specify the mounting position and number of stations of the single and double wiring on the manifold specification sheet.

2. Wiring specifications
Connector terminal numbers are connected from solenoid station 1 on the A side in the order indicated by the arrows without skipping any terminal numbers.

How to Order Manifold

SS0750 – 08 C4 C8 PD1 – B

Stations

Symbol	Stations
01	1 station
⋮	⋮
24	24 stations

∗: The maximum number of stations will be different depending on the wiring specifications.

Cylinder port size

Symbol	Port size	
C2	With ø2 One-touch fitting	Metric
C3	With ø3.2 One-touch fitting	
C4	With ø4 One-touch fitting	
CM	Mixed sizes and with port plug∗1	
N1	With ø1/8" One-touch fitting	Inch
N3	With ø5/32" One-touch fitting	
NM	Mixed sizes and with port plug∗1	

∗1: Indicate the sizes on the manifold specification sheet in the case of CM and NM.

P, R port size

Symbol	Port size	
C6	With ø6 One-touch fitting	Metric
C8	With ø8 One-touch fitting	
N7	With ø1/4" One-touch fitting	Inch
N9	With ø5/16" One-touch fitting	

∗: If an inch size cylinder port is selected, select inch size piping connections for the P and R ports as well.

Option

Symbol	Specifications
Nil	None
B∗1	With back pressure check valve (All sta.)
D	With DIN rail (Rail length: Standard)
D0	Without DIN rail (With bracket)
D□∗2	With DIN rail Designated length (□: Station)
K∗3	Special wiring specifications (Except double wiring)
N	With name plate
R∗4	External pilot
S	Built-in silencer

∗1: When installing a back pressure check valve on the required station, enter the part number and specify the station position on the manifold specification sheet.
∗2: The available number of stations is larger than the number of manifold stations.
∗3: Indicate the wiring specifications for mixed single and double wirings.
∗4: For details, refer to page 1030.
∗: When two or more options are specified, indicate them alphabetically. Example) -BKN
∗: **For manifold optional parts, refer to pages 1030 to 1036.**
∗: **For manifold exploded view, refer to page 1026.**

Kit type/Cable length

Kit type	Symbol	Specifications	Standard station	Max. number of stations for special wiring specifications	Max. number of solenoids
P kit	**PD0**	Flat ribbon cable (26P), without cable	1 to 12 stations	24 stations	24
	PD1	Flat ribbon cable (26P), with 1.5 m cable			
	PD2	Flat ribbon cable (26P), with 3.0 m cable			
	PD3	Flat ribbon cable (26P), with 5.0 m cable			
	PDC	Flat ribbon cable (20P), without cable	1 to 9 stations	18 stations	18

∗: The maximum number of stations is determined by the total number of solenoids. For mixed single and double wirings, enter -K to the order code options.

Type of actuation	Single	Double, Dual 3-port
Number of solenoids	1	2

How to Order Valves

S07 1 0 □ – 5

Type of actuation

Symbol	Specifications
1	2-position single
2	2-position double
A	4-position dual 3-port (N.C. + N.C.) [Exhaust center]
B	4-position dual 3-port (N.O. + N.O.) [Pressure center]
C	4-position dual 3-port (N.C. + N.O.)

∗: For symbol, refer to page 972.

Base mounted plug-in

Function

Symbol	Specifications
Nil	Standard
R	External pilot∗1

∗1: Not compatible with dual 3-port valves. The 3(R) port is open to the atmosphere. (Cannot be used for applying pressure or vacuum)

Voltage

Symbol	Specifications
5	24 VDC
6	12 VDC

How to Order Manifold Assembly

Example **Flat ribbon cable kit**

Specify the part numbers for valves and options together beneath the manifold base part number.

SS0750-08C4C8PD1 ··· 1 set – Manifold base part no.
∗ **S0710-5** ····· 2 sets – Valve part no. (Stations 1 to 3)
∗ **S0720-5** ····· 4 sets – Valve part no. (Stations 4 to 5)
∗ **S07A0-5** ····· 1 set – Valve part no. (Stations 6 to 7)
∗ **SS0700-10A-1** ····· 1 set – Blanking plate part no. (Station 8)

Prefix the asterisk to the part numbers of the solenoid valve etc.

Write sequentially from the 1st station on the D side. When part numbers written collectively are complicated, specify on the manifold specification sheet.

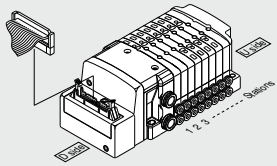

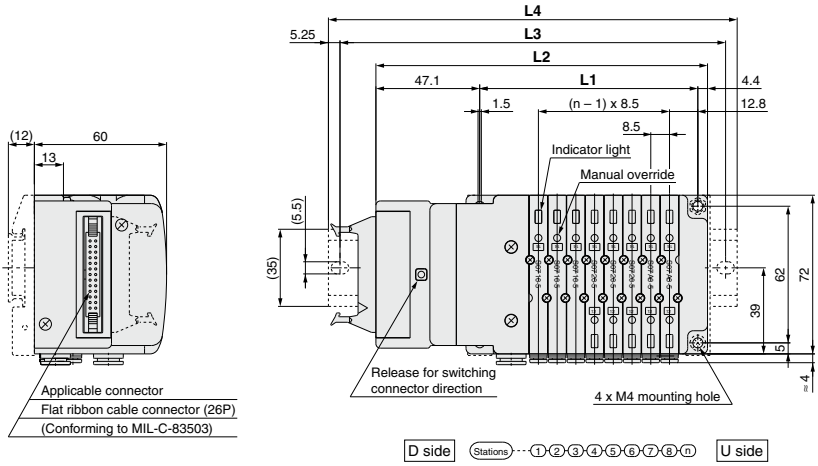

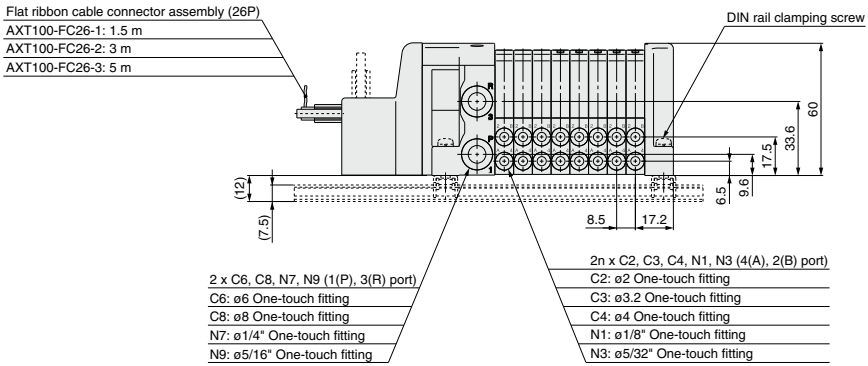

Dimensions

Formula L1 = 8.5n + 31, L2 = 8.5n + 82.5 n: Station (Maximum 24 stations)

L \ n	2	3	4	5	6	7	8	9	10	11	12	13	14	15	16	17	18	19	20	21	22	23	24
L1	48	56.5	65	73.5	82	90.5	99	107.5	116	124.5	133	141.5	150	158.5	167	175.5	184	192.5	201	209.5	218	226.5	235
L2	99.5	108	116.5	125	133.5	142	150.5	159	167.5	176	184.5	193	201.5	210	218.5	227	235.5	244	252.5	261	269.5	278	286.5
L3	125	137.5	137.5	150	162.5	162.5	175	187.5	187.5	200	212.5	212.5	225	237.5	250	250	262.5	275	275	287.5	300	300	312.5
L4	135.5	148	148	160.5	173	173	185.5	198	198	210.5	223	223	235.5	248	260.5	260.5	273	285.5	285.5	298	310.5	310.5	323

Plug-in Type Stacking Base

Terminal Block Box

T Kit

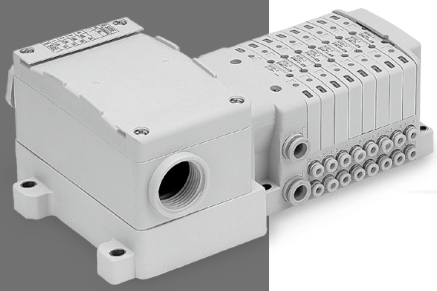

With Terminal Block Box

Page 1014

Plug-in Type

T S0700 Series Stacking Base Kit (Terminal Block Box)

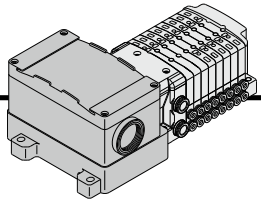

● **This kit has a small terminal box inside a junction box. The electrical entry port (G3/4) permits connection of conduit fittings.**

Terminal Block Connection

Step 1. How to remove terminal block cover

Loosen the 4 mounting screws (M4) and open the terminal block cover.

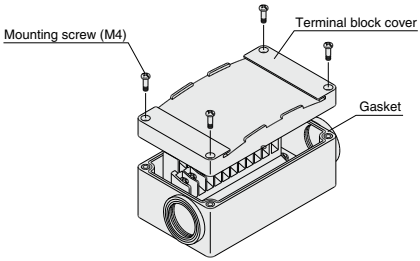

Step 2. The diagram below shows the terminal block wiring schematic. All stations are provided with double solenoid wiring.

Connect each wire to the power supply side, according to the markings provided inside the terminal block.

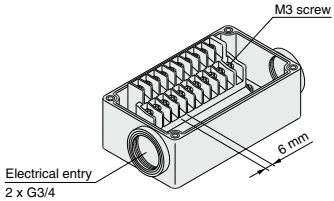

Step 3. How to replace terminal block cover

Securely tighten the screws with the torque shown in the table below, after confirming that the gasket is installed correctly.

Proper tightening torque [N·m]
0.7 to 1.2

- Applicable crimped terminal: 1.25-3S,1.25Y-3,1.25Y-3N,1.25Y-3.5
- Drip proof plug assembly (for G3/4): AXT100-B06A

Electrical Wiring Specifications

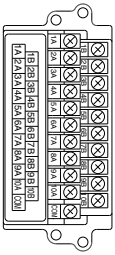

Double wiring (connected to SOL. A and SOL. B) is adopted for the internal wiring of each station, regardless of valve and option types. Mixed single and double wiring is available as an option.

*1: Mounting valve has no polarity. It can also be used as a negative common.

Standard wiring

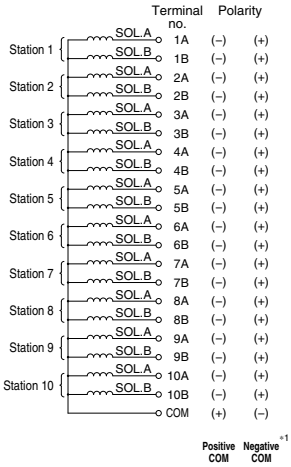

Special Wiring Specifications (Option) [-K]

Mixed single and double wiring are available as an option. The maximum number of manifold stations is determined by the number of solenoids. Count one point for a single solenoid type and two points for a double solenoid type. The total number of solenoids (points) must not exceed 20.

1. How to Order valves

Indicate an option symbol, -K, for the manifold part number and be sure to specify the mounting position and number of stations of the single and double wiring on the manifold specification sheet.

2. Wiring specifications

Connector terminal numbers are connected from solenoid station 1 on the A side in the order indicated by the arrows without skipping any terminal numbers.

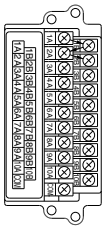

How to Order Manifold

SS0750 – 08 C4 C8 TD0 – B

Stations

Symbol	Stations
01	1 station
⋮	⋮
20*1	20 stations

*1: The maximum number of stations will be different depending on the wiring specifications.

Cylinder port size

Symbol	Port size	
C2	With ø2 One-touch fitting	Metric
C3	With ø3.2 One-touch fitting	
C4	With ø4 One-touch fitting	
CM	Mixed sizes and with port plug*1	
N1	With ø1/8" One-touch fitting	Inch
N3	With ø5/32" One-touch fitting	
NM	Mixed sizes and with port plug*1	

*1: Specify "Mixed sizes and with port plug" on the manifold specification sheet.

P, R port size

Symbol	Port size	
C6	With ø6 One-touch fitting	Metric
C8	With ø8 One-touch fitting	
N7	With ø1/4" One-touch fitting	Inch
N9	With ø5/16" One-touch fitting	

*: If an inch size cylinder port is selected, select inch size piping connections for the P and R ports as well.

Kit type

Kit type	Symbol	Specifications	Standard station	Max. number of stations for special wiring specifications	Max. number of solenoids
T kit	TD0	Terminal block	1 to 10 stations	20 stations	20

*: The maximum number of stations is determined by the total number of solenoids.
For mixed single and double wirings, enter -K to the order code options.

Type of actuation	Single	Double, Dual 3-port
Number of solenoids	1	2

Option

Symbol	Specifications
Nil	None
B*1	With back pressure check valve (All stations)
D	With DIN rail (Rail length: Standard)
D0	Without DIN rail (With bracket)
D□*2	With DIN rail Designated length (□: Station)
K*3	Special wiring specifications (Except double wiring)
N	With name plate
R*4	External pilot
S	Built-in silencer

*1: When installing a back pressure check valve on the required station, enter the part number and specify the station position on the manifold specification sheet.
*2: The available number of stations is larger than the number of manifold stations.
*3: Indicate the wiring specifications for mixed single and double wirings.
*4: For details, refer to page 1030.
*: When two or more options are specified, indicate them alphabetically. Example) -BKN
*: **For manifold optional parts, refer to pages 1030 to 1036.**
*: **For manifold exploded view, refer to page 1026.**

How to Order Valves

S07 1 0 □ – 5

Type of actuation

Symbol	Specifications
1	2-position single
2	2-position double
A	4-position dual 3-port (N.C. + N.C.) [Exhaust center]
B	4-position dual 3-port (N.O. + N.O.) [Pressure center]
C	4-position dual 3-port (N.C. + N.O.)

*: For symbol, refer to page 972.

Base mounted plug-in

Function

Symbol	Specifications
Nil	Standard
R	External pilot*1

*1: Not compatible with dual 3-port valves. The 3(R) port is open to the atmosphere. (Cannot be used for applying pressure or vacuum)

Voltage

Symbol	Specifications
5	24 VDC
6	12 VDC

How to Order Manifold Assembly

Example Terminal block box kit

Specify the part numbers for valves and options together beneath the manifold base part number.

SS0750-08C4C8TD0··· 1 set – Manifold base part no.
- * **S0710-5** ····· 3 sets – Valve part no. (Stations 1 to 3)
- * **S0720-5** ····· 2 sets – Valve part no. (Stations 4 to 5)
- * **S07A0-5**····· 2 sets – Valve part no. (Stations 6 to 7)
- * **SS0700-10A-1** ····· 1 set – Blanking plate part no. (Station 8)

Prefix the asterisk to the part numbers of the solenoid valve etc.

Write sequentially from the 1st station on the D side. When part numbers written collectively are complicated, specify on the manifold specification sheet.

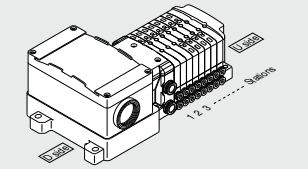

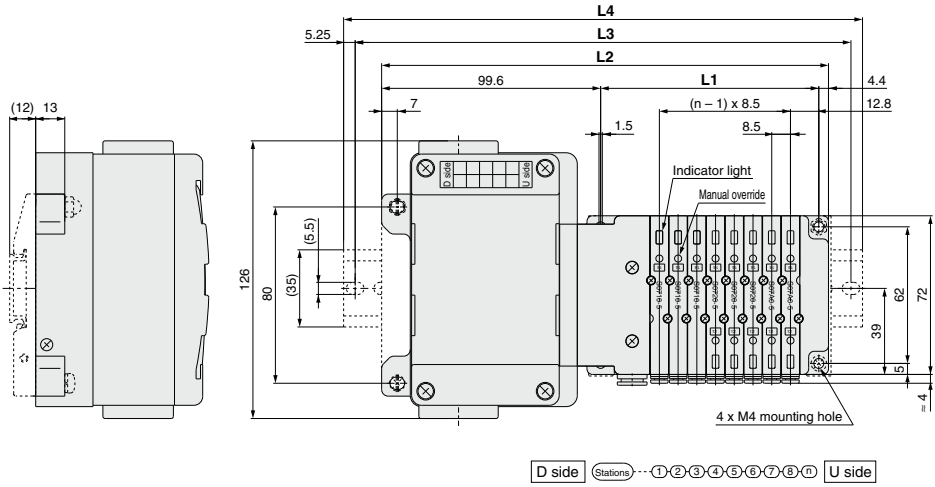

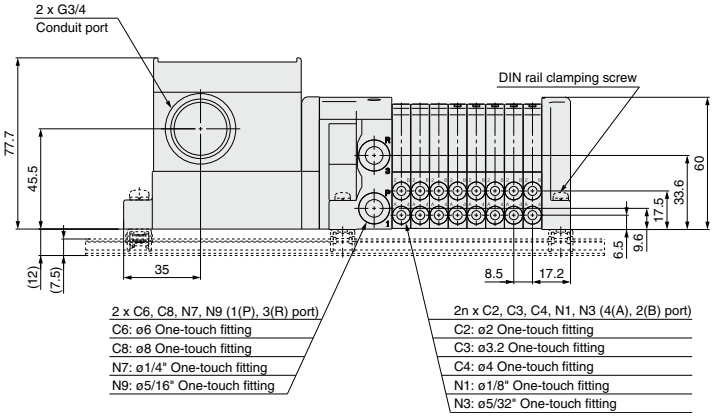

Dimensions

Formula L1 = 8.5n + 31, L2 = 8.5n + 135 n: Station (Maximum 20 stations)

L \ n	2	3	4	5	6	7	8	9	10	11	12	13	14	15	16	17	18	19	20
L1	48	56.5	65	73.5	82	90.5	99	107.5	116	124.5	133	141.5	150	158.5	167	175.5	184	192.5	201
L2	152	160.5	169	177.5	186	194.5	203	211.5	220	228.5	237	245.5	254	262.5	271	279.5	288	296.5	305
L3	175	187.5	200	200	212.5	225	225	237.5	250	250	262.5	275	275	287.5	300	300	312.5	325	325
L4	185.5	198	210.5	210.5	223	235.5	235.5	248	260.5	260.5	273	285.5	285.5	298	310.5	310.5	323	335.5	335.5

Plug-in Type Stacking Base

Lead Wire

L Kit

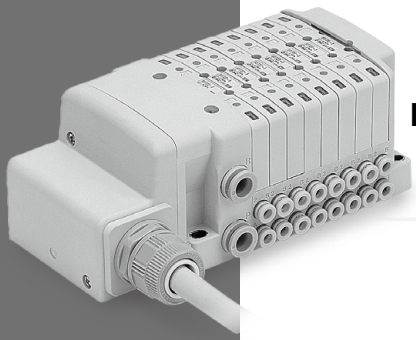

Lead Wire Direct Entry Type

Page 1018

Plug-in Type

L S0700 Series Stacking Base Kit (Lead Wire)

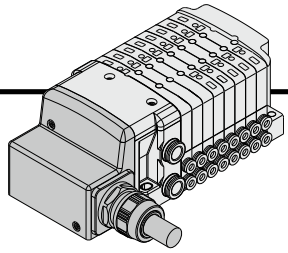

● **Direct electrical entry type**

Electrical Wiring Specifications

Lead wire specifications

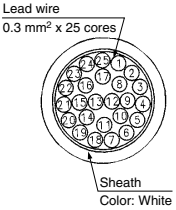

As the standard electrical wiring specifications, double wiring (connected to SOL. A and SOL. B) is adopted for the internal wiring of each station for 12 stations or less, regardless of valve and option types.
Mixed single and double wiring is available as an option. For details, refer to Special Wiring Specifications (Option) below.

		Terminal no.	Polarity (Positive COM)	Polarity (Negative COM*1)	Lead wire color	Dot marking
Station 1	SOL.A	1	(–)	(+)	Black	None
	SOL.B	14	(–)	(+)	Yellow	Black
Station 2	SOL.A	2	(–)	(+)	Brown	None
	SOL.B	15	(–)	(+)	Pink	Black
Station 3	SOL.A	3	(–)	(+)	Red	None
	SOL.B	16	(–)	(+)	Blue	White
Station 4	SOL.A	4	(–)	(+)	Orange	None
	SOL.B	17	(–)	(+)	Purple	None
Station 5	SOL.A	5	(–)	(+)	Yellow	None
	SOL.B	18	(–)	(+)	Gray	None
Station 6	SOL.A	6	(–)	(+)	Pink	None
	SOL.B	19	(–)	(+)	Orange	Black
Station 7	SOL.A	7	(–)	(+)	Blue	None
	SOL.B	20	(–)	(+)	Red	White
Station 8	SOL.A	8	(–)	(+)	Purple	White
	SOL.B	21	(–)	(+)	Brown	White
Station 9	SOL.A	9	(–)	(+)	Gray	Black
	SOL.B	22	(–)	(+)	Pink	Red
Station 10	SOL.A	10	(–)	(+)	White	Black
	SOL.B	23	(–)	(+)	Gray	Red
Station 11	SOL.A	11	(–)	(+)	White	Red
	SOL.B	24	(–)	(+)	Black	White
Station 12	SOL.A	12	(–)	(+)	Yellow	Red
	SOL.B	25	(–)	(+)	White	None
	COM.	13	(+)	(–)	Orange	Red

*1: Mounting valve has no polarity. It can also be used as a negative common.

Lead wire length

SS0750 – 08C4LD 0

Lead wire length

0	0.6 m
1	1.5 m
2	3.0 m

Electrical Characteristics

Item	Property
Conductor resistance Ω/km, 20°C	65 or less
Voltage limit V, 1 min, AC	1000
Insulation resistance MΩ/km, 20°C	5 or more

*: Cannot be used for movable wiring. The minimum bending inner radius of cable is 20 mm.

Special Wiring Specifications (Option) [-K]

Mixed single and double wiring are available as an option. The maximum number of manifold stations is determined by the number of solenoids. Count one point for a single solenoid type and two points for a double solenoid type. The total number of solenoids (points) must not exceed 24.

1. How to Order valves

Indicate an option symbol, -K, for the manifold part number and be sure to specify the mounting position and number of stations of the single and double wiring on the manifold specification sheet.

2. Wiring specifications

Connector terminal numbers are connected from solenoid station 1 on the A side in the order indicated by the arrows without skipping any terminal numbers.

How to Order Manifold

SS0750 – 08 C4 C8 LD0 – B

Stations

Symbol	Stations
01	1 station
⋮	⋮
24	24 stations

∗: The maximum number of stations will be different depending on the wiring specifications.

Cylinder port size

Symbol	Port size	
C2	With ø2 One-touch fitting	Metric
C3	With ø3.2 One-touch fitting	
C4	With ø4 One-touch fitting	
CM	Mixed sizes and with port plug∗1	
N1	With ø1/8" One-touch fitting	Inch
N3	With ø5/32" One-touch fitting	
NM	Mixed sizes and with port plug∗1	

∗1: Specify "Mixed sizes and with port plug" on the manifold specification sheet.

P, R port size

Symbol	Port size	
C6	With ø6 One-touch fitting	Metric
C8	With ø8 One-touch fitting	
N7	With ø1/4" One-touch fitting	Inch
N9	With ø5/16" One-touch fitting	

∗: If an inch size cylinder port is selected, select inch size piping connections for the P and R ports as well.

Kit type/Cable length

Kit type	Symbol	Specifications	Standard station	Max. number of stations for special wiring specifications	Max. number of solenoids
L kit	LD0	Lead wire, with 0.6 m cable	1 to 12 stations	24 stations	24
	LD1	Lead wire, with 1.5 m cable			
	LD2	Lead wire, with 3.0 m cable			

∗: The maximum number of stations is determined by the total number of solenoids.
For mixed single and double wirings, enter -K to the order code options.

Type of actuation	Single	Double, Dual 3-port
Number of solenoids	1	2

Option

Symbol	Specifications
Nil	None
B∗1	With back pressure check valve (All stations)
D	With DIN rail (Rail length: Standard)
D0	Without DIN rail (With bracket)
D□∗2	With DIN rail Designated length (□: Station)
K∗3	Special wiring specifications (Except double wiring)
N	With name plate
R∗4	External pilot
S	Built-in silencer

∗1: When installing a back pressure check valve on the required station, enter the part number and specify the station position on the manifold specification sheet.
∗2: The available number of stations is larger than the number of manifold stations.
∗3: Indicate the wiring specifications for mixed single and double wirings.
∗4: For details, refer to page 1030.
∗: When two or more options are specified, indicate them alphabetically. Example) -BKN
∗: **For manifold optional parts, refer to pages 1030 to 1036.**
∗: **For manifold exploded view, refer to page 1026.**

How to Order Valves

S07 1 0 □ – 5

Type of actuation

Symbol	Specifications
1	2-position single
2	2-position double
A	4-position dual 3-port (N.C. + N.C.) [Exhaust center]
B	4-position dual 3-port (N.O. + N.O.) [Pressure center]
C	4-position dual 3-port (N.C. + N.O.)

∗: For symbol, refer to page 972.

Base mounted plug-in

Voltage

Symbol	Specifications
5	24 VDC
6	12 VDC

Function

Symbol	Specifications
Nil	Standard
R	External pilot∗1

∗1: Not compatible with dual 3-port valves. The 3(R) port is open to the atmosphere. (Cannot be used for applying pressure or vacuum)

How to Order Manifold Assembly

Example Lead wire kit

Specify the part numbers for valves and options together beneath the manifold base part number.

SS0750-08C4C8LD0··· 1 set – Manifold base part no.
∗ **S0710-5** ····· 3 sets – Valve part no. (Stations 1 to 3)
∗ **S0720-5** ····· 2 sets – Valve part no. (Stations 4 to 5)
∗ **S07A0-5**····· 2 sets – Valve part no. (Stations 6 to 7)
∗ **SS0700-10A-1** ····· 1 set – Blanking plate part no. (Station 8)

Prefix the asterisk to the part numbers of the solenoid valve etc.

Write sequentially from the 1st station on the D side. When part numbers written collectively are complicated, specify on the manifold specification sheet.

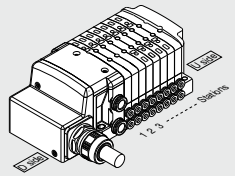

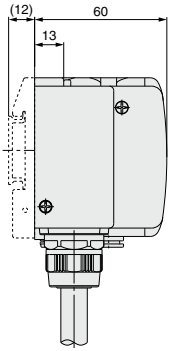

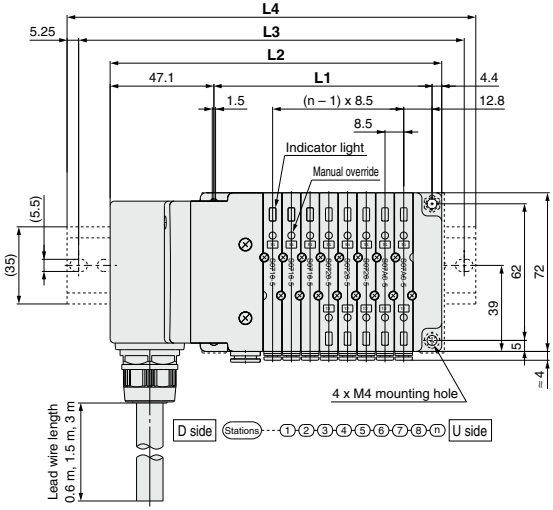

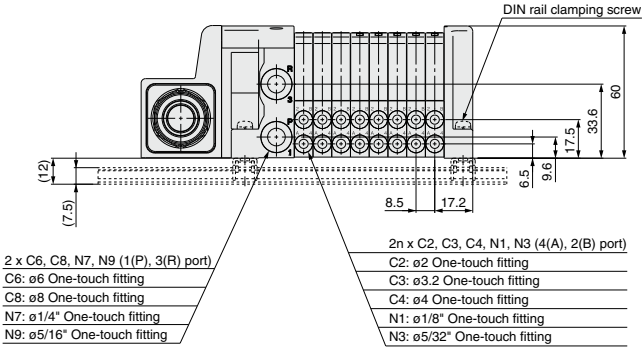

Dimensions

Formula L1 = 8.5n + 31, L2 = 8.5n + 82.5 n: Station (Maximum 24 stations)

L \ n	2	3	4	5	6	7	8	9	10	11	12	13	14	15	16	17	18	19	20	21	22	23	24
L1	48	56.5	65	73.5	82	90.5	99	107.5	116	124.5	133	141.5	150	158.5	167	175.5	184	192.5	201	209.5	218	226.5	235
L2	99.5	108	116.5	125	133.5	142	150.5	159	167.5	176	184.5	193	201.5	210	218.5	227	235.5	244	252.5	261	269.5	278	286.5
L3	125	137.5	137.5	150	162.5	162.5	175	187.5	187.5	200	212.5	212.5	225	237.5	250	250	262.5	275	275	287.5	300	300	312.5
L4	135.5	148	148	160.5	173	173	185.5	198	198	210.5	223	223	235.5	248	260.5	260.5	273	285.5	285.5	298	310.5	310.5	323

Plug-in Type Stacking Base

Circular Connector

M Kit

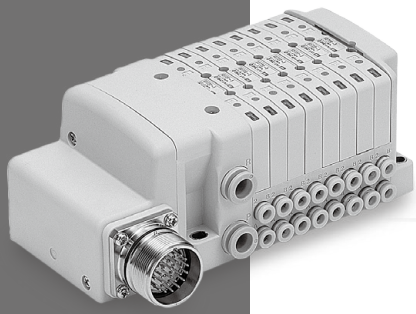

Circular Connector 26 Pins

Page 1022

Plug-in Type

M S0700 Series Stacking Base Kit (Circular Connector)

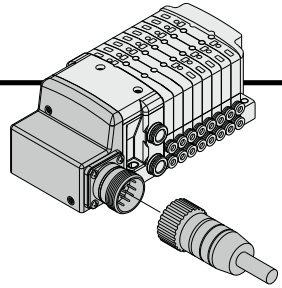

● **Simplification and labor savings for wiring work can be achieved by using a circular connector for the electrical connection.**

Electrical Wiring Specifications

Circular connector

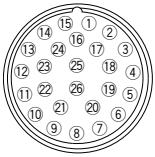

Double wiring (connected to SOL. A and SOL. B) is adopted for the internal wiring of each station, regardless of valve and option types.
Mixed single and double wiring is available as an option. For details, refer to Special Wiring Specifications (Option) below.

		Terminal no.	Polarity	
Station 1	SOL.A	1	(–)	(+)
	SOL.B	2	(–)	(+)
Station 2	SOL.A	3	(–)	(+)
	SOL.B	4	(–)	(+)
Station 3	SOL.A	5	(–)	(+)
	SOL.B	6	(–)	(+)
Station 4	SOL.A	7	(–)	(+)
	SOL.B	8	(–)	(+)
Station 5	SOL.A	9	(–)	(+)
	SOL.B	10	(–)	(+)
Station 6	SOL.A	11	(–)	(+)
	SOL.B	12	(–)	(+)
Station 7	SOL.A	13	(–)	(+)
	SOL.B	14	(–)	(+)
Station 8	SOL.A	15	(–)	(+)
	SOL.B	16	(–)	(+)
Station 9	SOL.A	17	(–)	(+)
	SOL.B	18	(–)	(+)
Station 10	SOL.A	19	(–)	(+)
	SOL.B	20	(–)	(+)
Station 11	SOL.A	21	(–)	(+)
	SOL.B	22	(–)	(+)
Station 12	SOL.A	23	(–)	(+)
	SOL.B	24	(–)	(+)
	COM.	25	(+)	(–)
	COM.	26	(+)	(–)
			Positive COM	Negative COM *1

*1: Mounting valve has no polarity. It can also be used as a negative common.

Special Wiring Specifications (Option) [-K]

Mixed single and double wiring are available as an option. The maximum number of manifold stations is determined by the number of solenoids. Count one point for a single solenoid type and two points for a double solenoid type. The total number of solenoids (points) must not exceed 24.

1. How to Order valves

Indicate an option symbol, -K, for the manifold part number and be sure to specify the mounting position and number of stations of the single and double wiring on the manifold specification sheet.

2. Wiring specifications

Connector terminal numbers are connected from solenoid station 1 on the A side in the order indicated by the arrows without skipping any terminal numbers.

Cable Assembly

AXT100-MC26-015 / 030 / 050

(Circular connector assembly (26P type) can be included in a specific manifold model number. Refer to How to Order Manifold.)

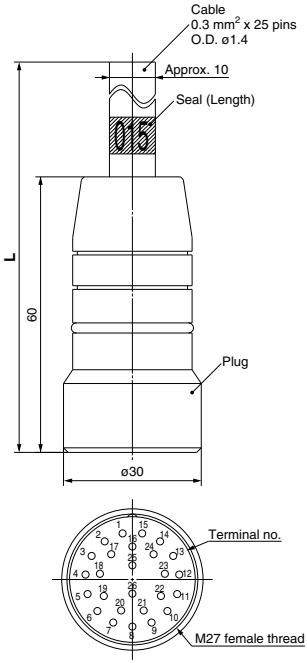

Circular Connector Cable Assembly (Option)

Cable length (L)	Assembly part no. 26P
1.5 m	AXT100-MC26-015
3 m	AXT100-MC26-030
5 m	AXT100-MC26-050

*: Cannot be used for movable wiring.

How to Order Manifold

SS0750 – 08 C4 C8 MD1 – B

Stations

Symbol	Stations
01	1 station
⋮	⋮
24*1	24 stations

*1: The maximum number of stations will be different depending on the wiring specifications.

Cylinder port size

Symbol	Port size	
C2	With ø2 One-touch fitting	Metric
C3	With ø3.2 One-touch fitting	
C4	With ø4 One-touch fitting	
CM	Mixed sizes and with port plug*1	
N1	With ø1/8" One-touch fitting	Inch
N3	With ø5/32" One-touch fitting	
NM	Mixed sizes and with port plug*1	

*1: Specify Mixed sizes and with port plug on the manifold specification sheet.

P, R port size

Symbol	Port size	
C6	With ø6 One-touch fitting	Metric
C8	With ø8 One-touch fitting	
N7	With ø1/4" One-touch fitting	Inch
N9	With ø5/16" One-touch fitting	

*: If an inch size cylinder port is selected, select inch size piping connections for the P and R ports as well.

Kit type/Cable length

Kit type	Symbol	Specifications	Standard station	Max. number of stations for special wiring specifications	Max. number of solenoids
M kit	MD0	Circular connector (26P), without cable	1 to 12 stations	24 stations	24
	MD1	Circular connector (26P), with 1.5 m cable			
	MD2	Circular connector (26P), with 3.0 m cable			
	MD3	Circular connector (26P), with 5.0 m cable			

*: The maximum number of stations is determined by the total number of solenoids. For mixed single and double wirings, enter -K to the order code options.

Type of actuation	Single	Double, Dual 3-port
Number of solenoids	1	2

Option

Symbol	Specifications
Nil	None
B*1	With back pressure check valve (All stations)
D	With DIN rail (Rail length: Standard)
D0	Without DIN rail (With bracket)
D□*2	With DIN rail Designated length (□: Station)
K*3	Special wiring specifications (Except double wiring)
N	With name plate
R*4	External pilot
S	Built-in silencer

*1: When installing a back pressure check valve on the required station, enter the part number and specify the station position on the manifold specification sheet.
*2: The available number of stations is larger than the number of manifold stations.
*3: Indicate the wiring specifications for mixed single and double wirings.
*4: For details, refer to page 1030.
*: When two or more options are specified, indicate them alphabetically. Example) -BKN
*: **For manifold optional parts, refer to pages 1030 to 1036.**
*: **For manifold exploded view, refer to page 1026.**

How to Order Manifold Assembly

Example **Circular connector kit**

Specify the part numbers for valves and options together beneath the manifold base part number.

SS0750-08C4C8MD1··· **1 set – Manifold base part no.**
* **S0710-5** ····· **3 sets – Valve part no. (Stations 1 to 3)**
* **S0720-5** ····· **2 sets – Valve part no. (Stations 4 to 5)**
* **S07A0-5**····· **2 sets – Valve part no. (Stations 6 to 7)**
* **SS0700-10A-1** ····· **1 set – Blanking plate part no. (Station 8)**

Prefix the asterisk to the part numbers of the solenoid valve etc.

Write sequentially from the 1st station on the D side. When part numbers written collectively are complicated, specify on the manifold specification sheet.

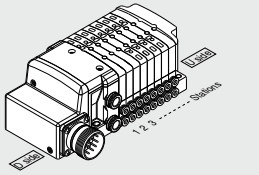

How to Order Valves

S07 1 0 □ – 5

Type of actuation

Symbol	Specifications
1	2-position single
2	2-position double
A	4-position dual 3-port (N.C. + N.C.) [Exhaust center]
B	4-position dual 3-port (N.O. + N.O.) [Pressure center]
C	4-position dual 3-port (N.C. + N.O.)

*: For symbol, refer to page 972.

Base mounted plug-in

Function

Symbol	Specifications
Nil	Standard
R	External pilot*1

*1: Not compatible with dual 3-port valves. The 3(R) port is open to the atmosphere. (Cannot be used for applying pressure or vacuum)

Voltage

Symbol	Specifications
5	24 VDC
6	12 VDC

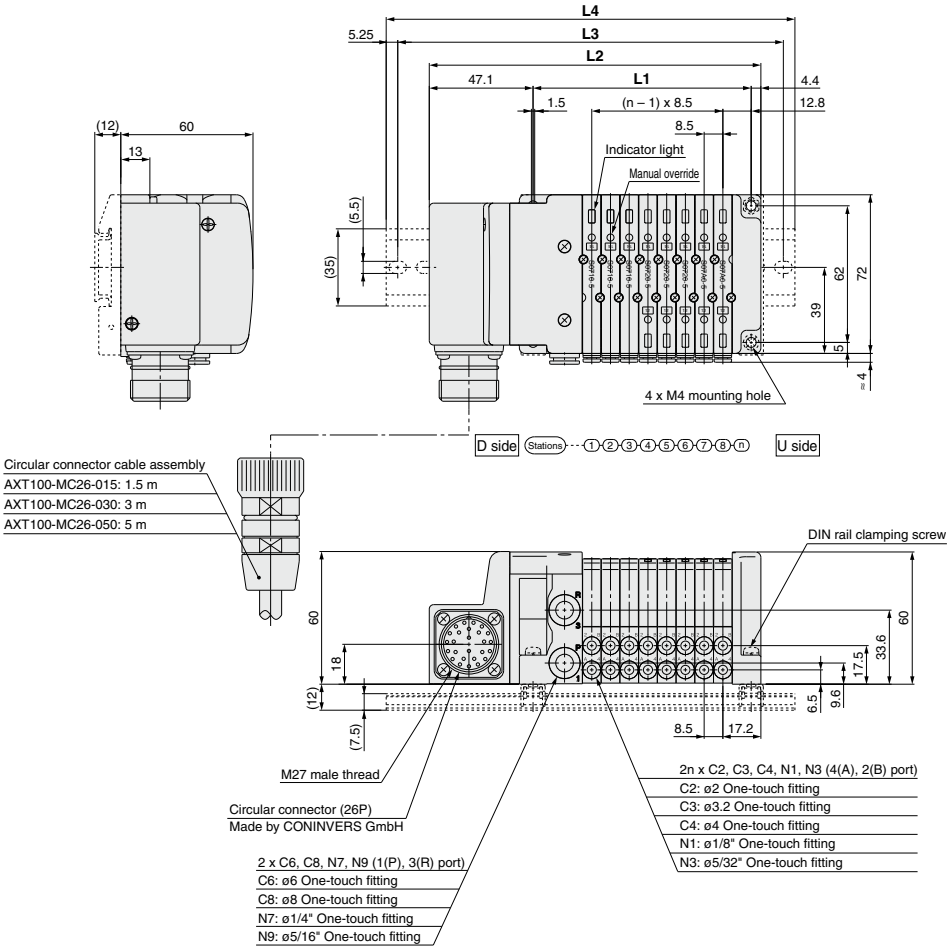

Dimensions

Formula L1 = 8.5n + 31, L2 = 8.5n + 82.5 n: Station (Maximum 24 stations)

L \ n	2	3	4	5	6	7	8	9	10	11	12	13	14	15	16	17	18	19	20	21	22	23	24
L1	48	56.5	65	73.5	82	90.5	99	107.5	116	124.5	133	141.5	150	158.5	167	175.5	184	192.5	201	209.5	218	226.5	235
L2	99.5	108	116.5	125	133.5	142	150.5	159	167.5	176	184.5	193	201.5	210	218.5	227	235.5	244	252.5	261	269.5	278	286.5
L3	125	137.5	137.5	150	162.5	162.5	175	187.5	187.5	200	212.5	212.5	225	237.5	250	250	262.5	275	275	287.5	300	300	312.5
L4	135.5	148	148	160.5	173	173	185.5	198	198	210.5	223	223	235.5	248	260.5	260.5	273	285.5	285.5	298	310.5	310.5	323

Construction

Single: S0710

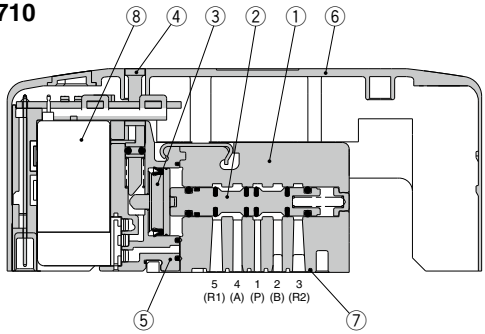

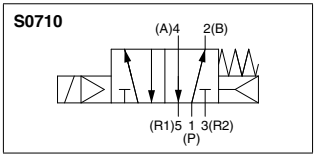

Double: S0720

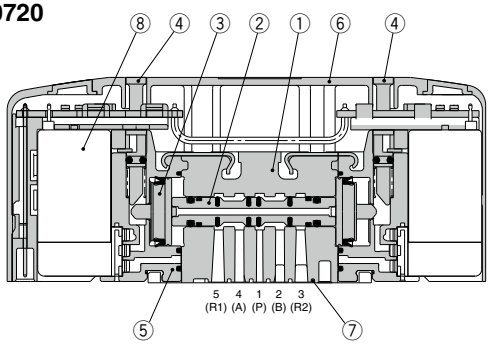

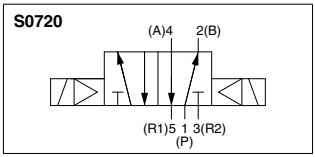

Dual 3-Port: S07B0 (A / B / C)

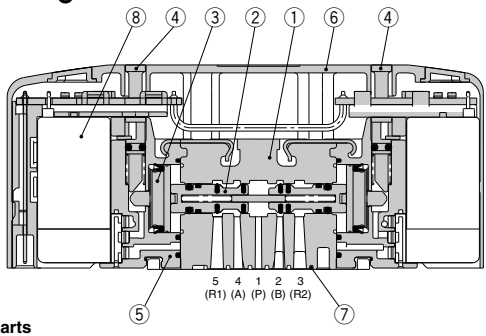

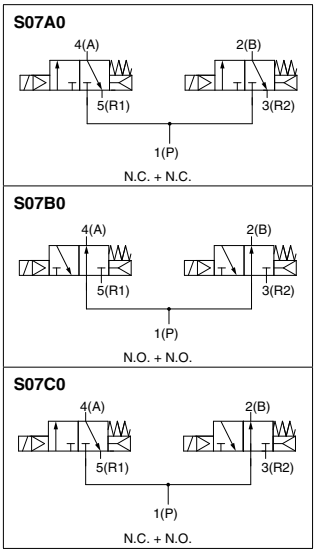

Component Parts

No.	Description	Material
1	**Body**	Zinc die-casted
2	**Spool**	Aluminum
3	**Piston**	Resin
4	**Manual override**	Resin
5	**Adapter plate**	Resin
6	**Cover**	Resin
7	**Interface gasket**	HNBR
8	**Pilot valve assembly** *1	—

*1: Please consult with SMC for pilot valve replacement.

Manifold Exploded View

		Housing assembly and SI unit	D-side end plate assembly	Manifold block assembly	U-side end plate assembly
S kit	EX260	①			
S kit	EX250	②③④			
S kit	EX600	⑤⑥⑦⑧⑨			
S kit	EX500	⑩			
F kit		⑪			
P kit		⑫			
T kit		⑬			
L kit		⑭			
M kit		⑮			

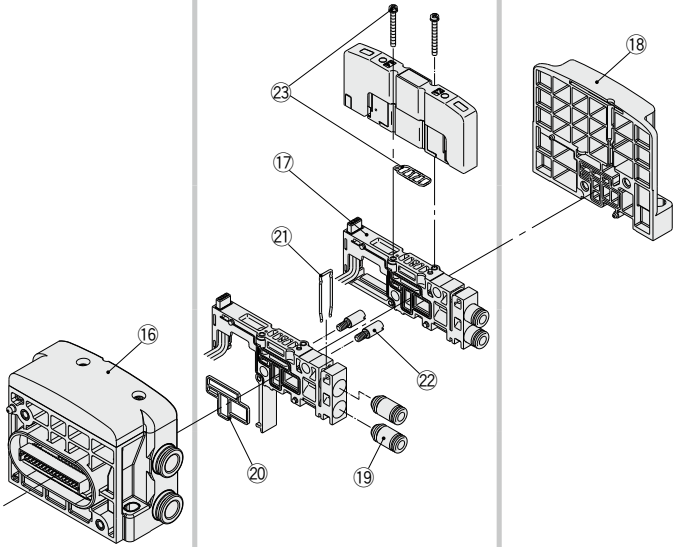

Manifold Assembly Part No.

<Housing Assembly and SI Unit, Input Block>

No.	Description	Part no.	Note
①	EX260 SI unit	EX260-SDN1	DeviceNet® M12 connector, 32 outputs, PNP (Negative common)
		EX260-SDN2	DeviceNet® M12 connector, 32 outputs, NPN (Positive common)
		EX260-SDN3	DeviceNet® M12 connector, 16 outputs, PNP (Negative common)
		EX260-SDN4	DeviceNet® M12 connector, 16 outputs, NPN (Positive common)
		EX260-SPR1	PROFIBUS DP M12 connector, 32 outputs, PNP (Negative common)
		EX260-SPR2	PROFIBUS DP M12 connector, 32 outputs, NPN (Positive common)
		EX260-SPR3	PROFIBUS DP M12 connector, 16 outputs, PNP (Negative common)
		EX260-SPR4	PROFIBUS DP M12 connector, 16 outputs, NPN (Positive common)
		EX260-SPR5	PROFIBUS DP D-sub connector, 32 outputs, PNP (Negative common)
		EX260-SPR6	PROFIBUS DP D-sub connector, 32 outputs, NPN (Positive common)
		EX260-SPR7	PROFIBUS DP D-sub connector, 16 outputs, PNP (Negative common)
		EX260-SPR8	PROFIBUS DP D-sub connector, 16 outputs, NPN (Positive common)
		EX260-SMJ1	CC-Link M12 connector, 32 outputs, PNP (Negative common)
		EX260-SMJ2	CC-Link M12 connector, 32 outputs, NPN (Positive common)
		EX260-SMJ3	CC-Link M12 connector, 16 outputs, PNP (Negative common)
		EX260-SMJ4	CC-Link M12 connector, 16 outputs, NPN (Positive common)
		EX260-SEC1	EtherCAT M12 connector, 32 outputs, PNP (Negative common)
		EX260-SEC2	EtherCAT M12 connector, 32 outputs, NPN (Positive common)
		EX260-SEC3	EtherCAT M12 connector 16 outputs, PNP (Negative common)
		EX260-SEC4	EtherCAT M12 connector, 16 outputs, NPN (Positive common)
		EX260-SPN1	PROFINET M12 connector, 32 outputs, PNP (Negative common)
		EX260-SPN2	PROFINET M12 connector, 32 outputs, NPN (Positive common)
		EX260-SPN3	PROFINET M12 connector, 16 outputs, PNP (Negative common)
		EX260-SPN4	PROFINET M12 connector, 16 outputs, NPN (Positive common)
		EX260-SEN1	EtherNet/IP™ M12 connector, 32 outputs, PNP (Negative common)
		EX260-SEN2	EtherNet/IP™ M12 connector, 32 outputs, NPN (Positive common)
		EX260-SEN3	EtherNet/IP™ M12 connector 16 outputs, PNP (Negative common)
		EX260-SEN4	EtherNet/IP™ M12 connector, 16 outputs, NPN (Positive common)
		EX260-SPL1	Ethernet POWERLINK M12 connector, 32 outputs, PNP (Negative common)
		EX260-SPL3	Ethernet POWERLINK M12 connector, 16 outputs, PNP (Negative common)
②	EX250 SI unit	EX250-SDN1	DeviceNet® PNP (Negative common)
		EX250-SAS3	AS-Interface, 8 in/8 out, 2 isolated common type, PNP (Negative common)
		EX250-SAS5	AS-Interface, 4 in/4 out, 2 isolated common type, PNP (Negative common)
		EX250-SAS7	AS-Interface, 8 in/8 out, 1 common type, PNP (Negative common)
		EX250-SAS9	AS-Interface, 4 in/4 out, 1 common type, PNP (Negative common)
		EX250-SEN1	EtherNet/IP™ PNP (Negative common)
③	EX250 input block	EX250-IE1	M12 2 inputs
		EX250-IE2	M12 4 inputs
		EX250-IE3	M8 4 inputs
④	EX250 end plate assembly	EX250-EA1	Direct mounting
		EX250-EA2	DIN rail mounting
⑤	EX600 SI unit	EX600-SDN1A	DeviceNet® PNP (Negative common)
		EX600-SDN2A	DeviceNet® NPN (Positive common)
		EX600-SMJ1	CC-Link PNP (Negative common)
		EX600-SMJ2	CC-Link NPN (Positive common)
		EX600-SPR1A	PROFIBUS DP PNP (Negative common)
		EX600-SPR2A	PROFIBUS DP NPN (Positive common)
		EX600-SEN3	EtherNet/IP™ (2 ports) PNP (Negative common)
		EX600-SEN4	EtherNet/IP™ (2 ports) NPN (Positive common)
		EX600-SPN1	PROFINET PNP (Negative common)
		EX600-SPN2	PROFINET NPN (Positive common)
		EX600-WEN1*1	Wireless base module EtherNet/IP™ PNP (Negative common)
		EX600-WEN2*1	Wireless base module EtherNet/IP™ NPN (Positive common)
		EX600-WPN1*1	Wireless base module PROFINET PNP (Negative common)
		EX600-WPN2*1	Wireless base module PROFINET NPN (Positive common)
		EX600-WSV1*1	Wireless remote module PNP (Negative common)
		EX600-WSV2*1	Wireless remote module NPN (Positive common)
⑥	EX600 digital input unit	EX600-DXNB	NPN input, M12 connector, 5 pins (4 pcs.), 8 inputs
		EX600-DXPB	PNP input, M12 connector, 5 pins (4 pcs.), 8 inputs
		EX600-DXNC	NPN input, M8 connector, 3 pins (8 pcs.), 8 inputs
		EX600-DXNC1	NPN input, M8 connector, 3 pins (8 pcs.), 8 inputs, with open circuit detection
		EX600-DXPC	PNP input, M8 connector, 3 pins (8 pcs.), 8 inputs
		EX600-DXPC1	PNP input, M8 connector, 3 pins (8 pcs.), 8 inputs, with open circuit detection
		EX600-DXND	NPN input, M12 connector, 5 pins (8 pcs.), 16 inputs
		EX600-DXPD	PNP input, M12 connector, 5 pins (8 pcs.), 16 inputs
		EX600-DXNE	NPN input, D-sub connector, 25 pins, 16 inputs
		EX600-DXPE	PNP input, D-sub connector, 25 pins, 16 inputs
		EX600-DXNF	NPN input, Spring type terminal block, 32 pins, 16 inputs
		EX600-DXPF	PNP input, Spring type terminal block, 32 pins, 16 inputs

*1: The wireless system is suitable for use only in a country where it is in accordance with the Radio Act and regulations of that country.

Manifold Assembly Part No.

<Housing Assembly and SI Unit, Input Block>

No.	Description	Part no.	Note
⑥	EX600 digital output unit	EX600-DYNB	NPN output, M12 connector, 5 pins (4 pcs.), 8 outputs
		EX600-DYPB	PNP output, M12 connector, 5 pins (4 pcs.), 8 outputs
		EX600-DYNE	NPN output, D-sub connector, 25 pins,16 outputs
		EX600-DYPE	PNP output, D-sub connector, 25 pins, 16 outputs
		EX600-DYNF	NPN output, Spring type terminal block, 32 pins, 16 outputs
		EX600-DYPF	PNP output, Spring type terminal block, 32 pins, 16 outputs
	EX600 digital I/O unit	EX600-DMNE	NPN input/output, D-sub connector, 25 pins, 8 inputs/outputs
		EX600-DMPE	PNP input/output, D-sub connector, 25 pins, 8 inputs/outputs
		EX600-DMNF	NPN input/output, Spring type terminal block, 32 pins, 8 inputs/outputs
		EX600-DMPF	PNP input/output, Spring type terminal block, 32 pins, 8 inputs/outputs
	EX600 analog input unit	EX600-AXA	M12 connector, 5 pins (2 pcs.), 2-channel input
	EX600 analog output unit	EX600-AYA	M12 connector, 5 pins (2 pcs.), 2-channel output
	EX600 analog I/O unit	EX600-AMB	M12 connector, 5 pins (4 pcs.), 2-channel input/output
⑦	EX600 end plate	EX600-ED2	M12 power supply connector, B-coded
		EX600-ED2-2	M12 power supply connector, B-coded, with DIN rail mounting bracket
		EX600-ED3	7/8 inch power supply connector
		EX600-ED3-2	7/8 inch power supply connector, with DIN rail mounting bracket
		EX600-ED4	M12 power supply connector IN/OUT, A-coded, Pin arrangement 1
		EX600-ED4-2	M12 power supply connector IN/OUT, A-coded, Pin arrangement 1, with DIN rail mounting bracket
		EX600-ED5	M12 power supply connector IN/OUT, A-coded, Pin arrangement 2
		EX600-ED5-2	M12 power supply connector IN/OUT, A-coded, Pin arrangement 2, with DIN rail mounting bracket
⑧	EX600 valve plate	EX600-ZMV1	Enclosed parts: Round head screw (M4 x 6) 2 pcs, Round head screw (M3 x 8) 4 pcs.
⑨	EX600 bracket for end plate	EX600-ZMA2	This bracket is used for the end plate of DIN rail mounting.
⑩	EX500 SI unit	EX500-S103	EX500 Gateway Decentralized System 2 Negative common (PNP)
⑪	D-sub connector housing assembly	VVQC1000-F25-1	F kit, 25 pins
⑫	Flat ribbon cable housing assembly	VVQC1000-P26-1	P kit, 26 pins
		VVQC1000-P20-1	P kit, 20 pins
⑬	Terminal block box housing assembly	VVQC1000-T0-1	T kit
⑭	Lead wire housing assembly	VVQC1000-L25-0-1	L kit, Lead wire length 0.6 m
		VVQC1000-L25-1-1	L kit, Lead wire length 1.5 m
		VVQC1000-L25-2-1	L kit, Lead wire length 3.0 m
⑮	Circular connector housing assembly	VVQC1000-M26-1	M kit, 26 pins

⑯D-side end plate assembly part no.

SS0700 − 3 [A] − 1 − [C8] − [ ]

Number of outputs

Symbol	Specifications
A	24 outputs or less
B	25 outputs or more

Port size

Symbol	Port size
C8	With ø8 One-touch fitting
N9	With ø5/16" One-touch fitting

Option

Symbol	Specifications
Nil	Common EXH
R	External pilot
S	Direct EXH outlet with built-in silencer

∗: When both options are specified, indicate as -RS.

⑰Manifold block assembly

Tie-rod (2 pcs.) and lead wire assembly for extensions are attached.

SS0700 − 1A − [PD] [05] − [C3] − [ ]

Wiring specifications

Symbol	Specifications
PD	Double wiring
PS	Single wiring
P0	None

Stations

Symbol	Stations
02	2 stations
⋮	⋮
24	24 stations

Port size

Symbol	Port size
C2	With ø2 One-touch fitting
C3	With ø3.2 One-touch fitting
C4	With ø4 One-touch fitting
N1	With ø1/8" One-touch fitting
N3	With ø5/32" One-touch fitting
C0	Without One-touch fitting

Option

Symbol	Specifications
Nil	None
B	With back pressure check valve

⑱U-side end plate assembly part no.

SS0700 − 2A − 2

⑲Fitting assembly part no.

VVQ0000 − 50A − [C4]

Port size

Symbol	Applicable tube
C2	Applicable tube ø2
C3	Applicable tube ø3
C4	Applicable tube ø4
N1	Applicable tube ø1/8"
N3	Applicable tube ø5/32"

∗: Purchasing order is available in units of 10 pieces.
∗: For One-touch fittings replacement, refer to Specific Product Precautions.

<Replacement Parts for Manifold Block>

Replacement Parts

No.	Description	Part no.	Qty.
⑳	Gasket	SS0700-80A-2	10∗1
㉑	Clip	SS0700-80A-4	10∗1
㉒	Tie-rod assembly	SS0700-TR-□	2∗2

∗1: 1 set includes 10 pieces.
∗2: 1 set includes 2 pieces. Please order when eliminating manifold stations. When adding stations, tie-rods are attached to the manifold block assembly. Therefore, it is not necessary to order.
□: Stations 02 to 24

<Replacement Parts for Valve>

Replacement Parts

No.	Description	Part no.	Qty.
㉓	Gasket, Screw	S0700-GS-5	10

∗: Above part number consists of 10 units. Each unit has one gasket and two screws.

How to Add Manifold Stations (Plug-in Type/Lead Wire Connection Type)

What to order

• Manifold block assembly (Refer to ⑰ on page 1028.)

Steps for adding stations

① Loosen hexagon bolts from the end plate at the U-side and remove the end plate.

② Connect the tie rod for increasing the station number, open the junction cover, mount the manifold block assembly and U-side end plate and tighten them by hexagon bolts.
(Tightening torque: 0.85 to 0.95 N·m)

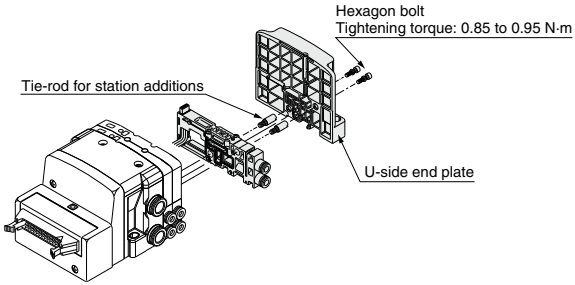

③ Connect the round type terminal of red lead wire to the common terminal inside the junction cover.

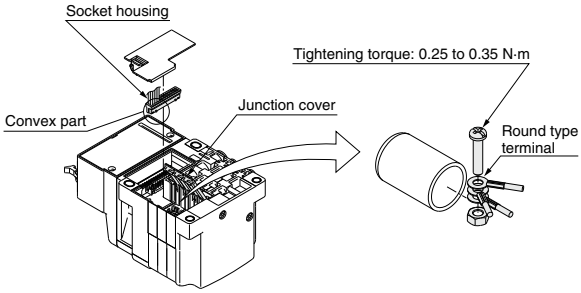

④ Take out the socket housing and connect the black and white lead wires.
The connection layout is common to all kits.

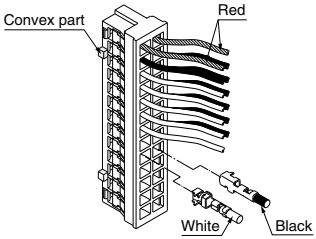

Terminal no.

COM.	Red	1A	1B	Red	COM.	
SOL.A Station 2	Black	2A	2B	Black	Station 1	SOL.A
SOL.B Station 3	White	3A	3B	Black	Station 3	SOL.A
SOL.B Station 4	White	4A	4B	Black	Station 4	SOL.A
SOL.B Station 5	White	5A	5B	Black	Station 5	SOL.A
SOL.B Station 6	White	6A	6B	Black	Station 6	SOL.A
		7A	7B			
		8A	8B			
		9A	9B			
		10A	10B			
		11A	11B			
		12A	12B			
		13A	13B			

Note) This drawing shows a special wiring specification (K) manifold with single wiring for stations 1 and 2 and double wiring for stations 3 to 6.

Manifold Optional Parts

Slim Compact Bar Base | Plug-in Type Stacking Base

Blanking plate assembly

SS0700-10A-1/SS0700-10A-3

It is used by attaching on the manifold base for being prepared for removing a valve for maintenance reasons or planning to mount a valve, etc.

Weight: 25 g

Applicable manifold		Part no.	Weight
Slim compact Bar base	SS0751	SS0700-10A-3	8 g
Plug-in type Stacking base	SS0750	SS0700-10A-1	25 g

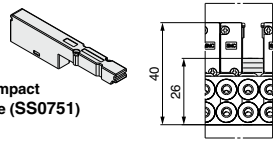

Slim compact Bar base (SS0751)

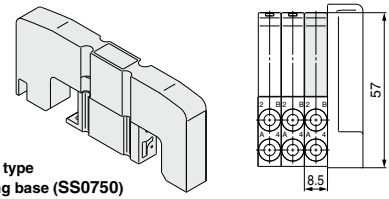

Plug-in type Stacking base (SS0750)

Slim Compact Bar Base | Plug-in Type Stacking Base

External pilot [-R]

This can be used when the air pressure is 0.1 to 0.2 MPa lower than the minimum operating pressure of the solenoid valves or used for vacuum specifications. Add -R to the part numbers of manifolds and valves to indicate the external pilot specifications. An M5 port will be installed on the top side of the manifold's SUP/EXH block.

●How to Order Valves (Example)
S071□ R -5
External pilot

●How to Order Manifold (Example)
∗: Indicate -R for an option.
SS075□-08C4FD1-R
External pilot

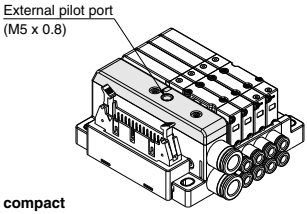

Slim compact Bar base (SS0751)

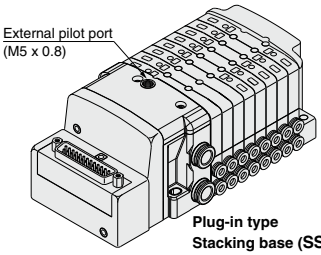

Plug-in type Stacking base (SS0750)

∗: Not compatible with dual 3-port valves.
∗: When the internal pilot type and external pilot type of valves are mixed up on the manifold, order the manifold suitable for the specifications of the external pilot valve.
∗: Valves with the external pilot have a pilot EXH with individual exhaust specifications and EXH can be pressurized. However, the pressure supplied from EXH should be 0.4 MPa or lower.

Slim Compact Bar Base | Plug-in Type Stacking Base

Direct EXH outlet with built-in silencer [-S]

This is a type with an exhaust port atop the manifold end plate. The built-in silencer exhibits an excellent noise suppression effect. (Noise reduction: 30 dB)

∗: A large quantity of drainage generated in the air source results in exhaust of air together with drainage.
∗: When ordering this option incorporated with a manifold, suffix -S to the end of the manifold part number.
∗: For precautions on handling and how to replace elements, refer to Specific Product Precautions.

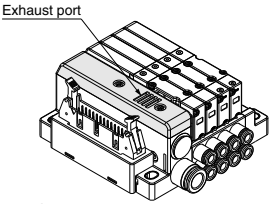

Slim compact Bar base (SS0751)

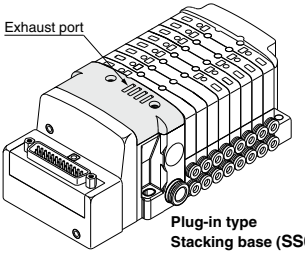

Plug-in type Stacking base (SS0750)

Plug-in Type
Stacking Base

Individual SUP/EXH spacer

SS0700-PR-1

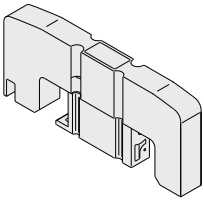

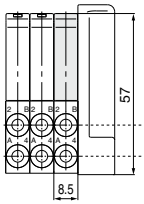

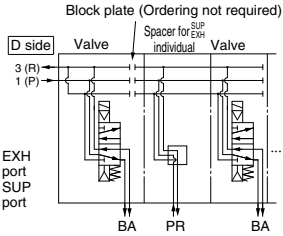

If this spacer is installed instead of a valve, it is possible to add SUP and EXH ports. In this condition, the A port should be an SUP port and the B port an EXH port.

∗: Specify the spacer mounting position and SUP/EXH passage shut off positions on the manifold specification sheet.
∗: The spacer comes with a SUP block plate and an EXH block plate.
∗: Electrical wiring is also connected to the spacer mounting position.
∗: Do not install any back pressure check valve on the manifold station, on which the spacer is to be mounted. When installing the back pressure check valve on other manifold station, be sure to specify the manifold station position on the manifold specification sheet instead of ordering by specifying the manifold option symbol B.

Slim Compact
Bar Base

Individual SUP spacer

SS0700-P-3-C4

•Port size

Symbol	Applicable tube
C2	Applicable tube ø2
C3	Applicable tube ø3
C4	Applicable tube ø4
N1	Applicable tube ø1/8"
N3	Applicable tube ø5/32"

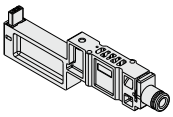

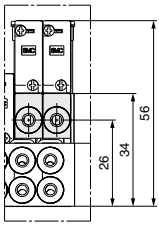

Mounted on the manifold block to make an independent supply port when each solenoid valve uses different operating pressure.

Weight: 15 g

Slim Compact
Bar Base

Individual EXH spacer

SS0700-R-3-C4

•Port size

Symbol	Applicable tube
C2	Applicable tube ø2
C3	Applicable tube ø3
C4	Applicable tube ø4
N1	Applicable tube ø1/8"
N3	Applicable tube ø5/32"

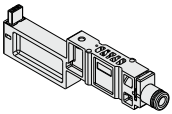

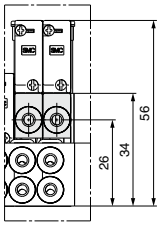

Mounted on the manifold block to make an independent exhaust port when the exhaust from one valve affects valves on other stations in the air circuit.

Weight: 15 g

Plug-in Type
Stacking Base

SUP block plate

SS0700-B-P

When different pressures, high and low, are supplied to one manifold, a SUP block plate is inserted between the stations under different pressures.

∗: Specify the number of stations on the manifold specification sheet.

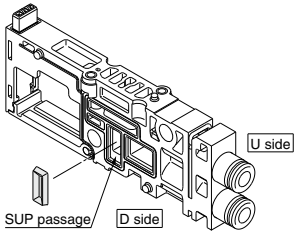

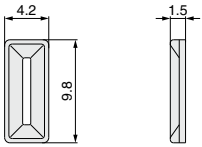

<Block indication label>

When using block plates for SUP passage, indication label for confirmation of the blocking position from outside is attached. (One label of each)

∗: When ordering a block plate for SUP incorporated with the manifold, a block indication label is attached to the manifold.

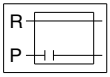

SUP passage blocked

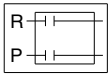

SUP/EXH passage blocked

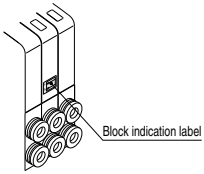

Weight: 0.3 g

Plug-in Type
Stacking Base

EXH block plate

SS0700-B-R

When valve exhaust affects the other stations on the circuit, insert EXH block plate in between stations to separate valve exhaust.

*: Specify the number of stations on the manifold specification sheet.

<Block indication label>

When using block plates for EXH passage, indication label for confirmation of the blocking position from outside is attached. (One label of each)

*: When ordering a block plate for EXH incorporated with the manifold, a block indication label is attached to the manifold.

Weight: 0.3 g

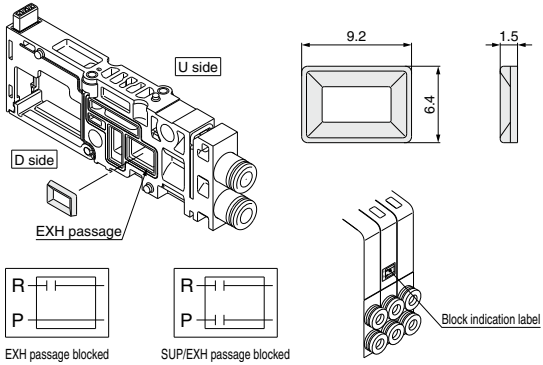

Plug-in Type
Stacking Base

Back pressure check valve [-B]

SS0700-7A-1

It prevents cylinder malfunction caused by other valve exhaust. Insert it into R (EXH) port on the manifold side of a valve which is affected. It is effective when a single action cylinder is used, etc.

*: When a check valve for back pressure prevention is desired, and is to be installed only in certain manifold stations, clearly write the part number and specify the number of stations on the manifold specification sheet.

*: When ordering this option incorporated with a manifold, suffix -B to the end of the manifold part number.

Weight: 0.1 g

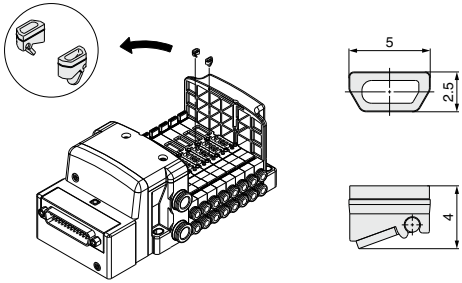

⚠ Caution

1. The manifold installed type back pressure check valve assembly is assembly parts with a check valve structure. However, since slight air leakage against the back pressure is allowed due to its structure, adverse effects of the back pressure due to increase in exhaust resistance cannot be prevented if the manifold exhaust port and other exhaust ports are put together for piping or if the piping diameter is narrowed. As a result, this may cause the actuator and air operated equipment to malfunction. So, be careful not to restrict the exhaust air.
2. When a back pressure check valve is mounted, the effective area of the valve will decrease by about 20%.
3. When operating the cylinder by the external force, the cylinder is difficult to operate if the back pressure check valve is mounted.

Slim Compact Bar Base | Plug-in Type Stacking Base

Blanking plate with output

SS0700-1C-□

•Type

3C	Slim compact Bar base
1C	Plug-in type Stacking base

•Lead wire length [mm]

Nil	600
10	1000
15	1500
20	2000
25	2500
30	3000

Blanking plate with a connector for individually outputting electricity to drive a single valve or equipment that are not on the manifold base.

*: Electric current should be 0.5 A or less. (Including the mounted valves) When the current is output from two positions at the same time, the current should be 0.25 A or less.

*: Please consult with SMC for the max. allowable current for serial transmission kit.

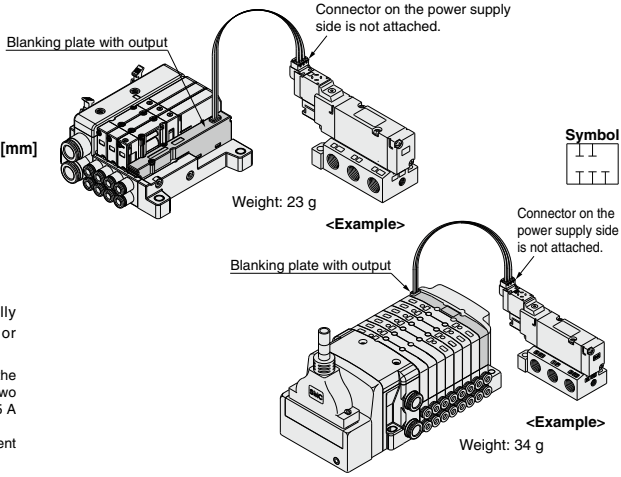

Slim Compact Bar Base | Plug-in Type Stacking Base

Port plug

VVQ0000-CP

The plug is used to block the cylinder port when using a 5-port valve as a 3-port valve.

*: When ordering a plug incorporated with a manifold, indicate CM for the port size in the manifold part number, as well as, the mounting position and number of stations and cylinder port mounting positions, A and B on the manifold specification sheet.

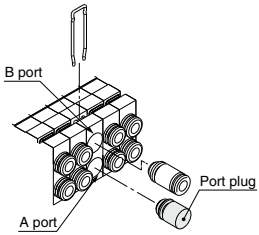

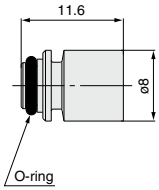

Slim Compact Bar Base | Plug-in Type Stacking Base

DIN rail mounting bracket

Slim compact bar base
SS0700-57A-3

Plug-in type stacking base
SS0700-57A-□

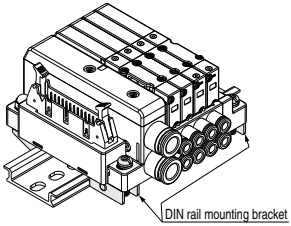

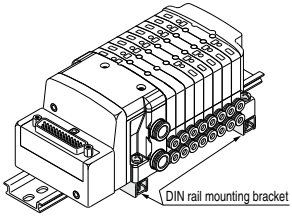

Symbol	Specifications
Nil	S (EX260/EX500/ EX600), F, P, L, M kit
S	S (EX250) kit
T	T kit

It is used for mounting a manifold on a DIN rail. The DIN rail mounted bracket is fixed to the manifold end plate. (The specification is the same as that for the option -D.)
1 set of DIN rail mounting bracket is included for 1 manifold (2 or 3 DIN rail mounting brackets (S, T kit)).

*: When ordering this option incorporated with a manifold, suffix D to the end of the manifold part number.

Slim Compact Bar Base | Plug-in Type Stacking Base

Applicable to DIN rail mounting

Each manifold can be mounted on a DIN rail.
Order it by indicating a manifold mounting symbol for DIN rail mounting [-D].
Standard DIN rail which is approx. 30 mm longer than the manifold with the specified number of stations is attached.
The following options are also available.

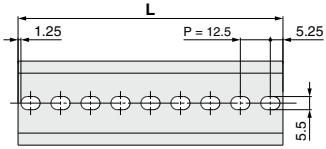

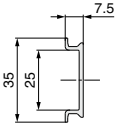

●DIN rail length longer than the standard (for stations to be added later, etc.)

In the manifold part number, specify -D for the manifold mounting symbol and add the number of required stations after the symbol.

Example) **SS0750-08C4FD0-D09K**

- 8-station manifold
- Optional symbol (alphabetically)
- DIN rail for 9 stations

●How to Order DIN rail only

DIN rail part number
AXT100-DR-n

*: For n, enter a number from the No. line in the table below.
For L dimension, refer to the dimensions of each kit.

L Dimension

L = 12.5 x n + 10.5

No.	1	2	3	4	5	6	7	8	9	10
L dimension	23	35.5	48	60.5	73	85.5	98	110.5	123	135.5

No.	11	12	13	14	15	16	17	18	19	20
L dimension	148	160.5	173	185.5	198	210.5	223	235.5	248	260.5

No.	21	22	23	24	25	26	27	28	29	30
L dimension	273	285.5	298	310.5	323	335.5	348	360.5	373	385.5

No.	31	32	33	34	35	36	37	38	39	40
L dimension	398	410.5	423	435.5	448	460.5	473	485.5	498	510.5

Slim Compact Bar Base | Plug-in Type Stacking Base

Blanking plug (For One-touch fittings)

KJP-02
KQ2P-23
KQ2P-04
KQ2P-06

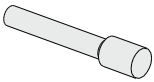

It is inserted into an unused cylinder port and SUP/EXH ports.
Purchasing order is available in units of 10 pieces.

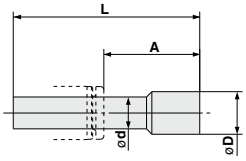

Dimensions [mm]

Applicable fitting size ød	Model	A	L	D	Weight: g
2	**KJP-02**	8.2	17	3	0.1
3.2	**KQ2P-23**	16	31.5	3.2	1
4	**KQ2P-04**	16	32	6	1
6	**KQ2P-06**	18	35	8	1

Slim Compact Bar Base | Plug-in Type Stacking Base

Silencer (For EXH port)

This silencer is to be inserted into the EXH port (One-touch fitting) of the common exhaust type.

AN15-C08

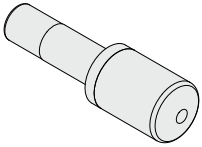

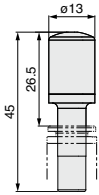

Specifications

Model	Effective area [mm²] (Cv factor)	Noise reduction [dB]
AN15-C08	20 (1.1)	30

Plug-in Type Stacking Base

Name plate [-N]

SS0700-N-Station (1 to max. stations)

It is a transparent resin plate for placing a label that indicates solenoid valve function, etc.
Insert it into the groove on the side of the end plate and bend it as shown in the figure.

*: When ordering this option incorporated with a manifold, suffix -N to the end of the manifold part number.

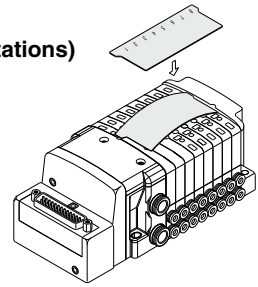

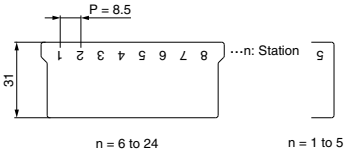

Plug-in Type
Stacking Base

Dual flow fitting

SS0700-52A-C6

Port size

C6	ø6

To drive a large bore cylinder, two valve stations are operated simultaneously to double the air flow. This fitting is used on the cylinder ports in this situation. Available sizes are ø6 One-touch fittings.

∗: A dedicated clip necessary to mount the dual flow fitting on the manifold is attached.
∗: When ordering the dual flow fitting mounted on the manifold, please specify CM (NM) for the port size of the manifold part number and the station positions on the manifold specification sheet.

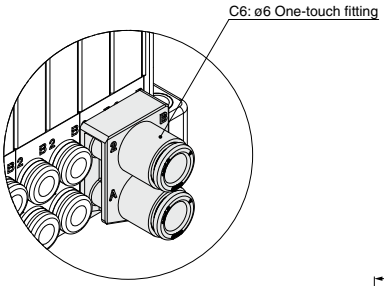

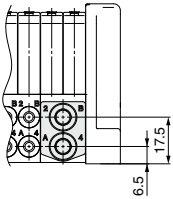

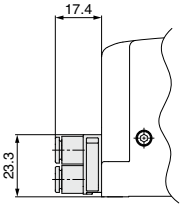

Plug-in Type
Stacking Base

SUP/EXH block

SS0700-PR-1-C6□-□

P, R port size
(When the port size is a different diameter, the P port size is shown.)

C0	Without One-touch fitting (With a clip)
C6	With ø6 One-touch fitting
C8	With ø8 One-touch fitting
N7	With ø1/4" One-touch fitting
N9	With ø5/16" One-touch fitting

Option

Nil	Internal pilot, Common exhaust (Standard)
R	External pilot
S	Direct exhaust (Built-in silencer)
RS	External pilot + Direct exhaust

R port size
(P and R port sizes are different diameters.)

Nil	Same diameter and built-in silencer S
C6	With ø6 One-touch fitting
C8	With ø8 One-touch fitting
N7	With ø1/4" One-touch fitting
N9	With ø5/16" One-touch fitting

It is added to the manifold to increase SUP/EXH capacity.

∗: SUP/EXH blocks are not included in the number of manifold stations.
∗: Specify the mounting position on the manifold specification sheet.

Description/Model \ Stations		1	2	3	4
Valve	Single	●	●	●	
	⋮				
Option	SUP/EXH block SS0700-PR-1-C6-□				●

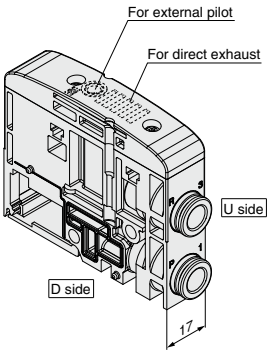

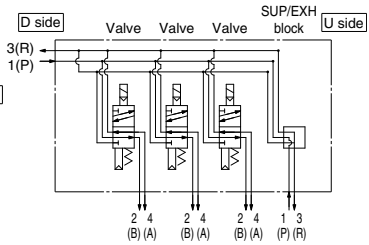

Slim Compact Bar Base | Plug-in Type Stacking Base

Double check block (Separated)

VQ1000-FPG-□□

It is used on the outlet side piping to keep the cylinder in the intermediate position for long periods of time. Combining the double check block with a built-in pilot type double check valve and a 2-position single/double solenoid valve will permit this block to be used for preventing the dropping at the cylinder stroke end when the SUP residual pressure is released.

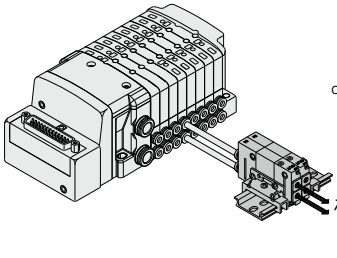

<Check Valve Working Principle>

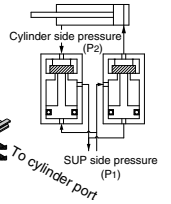

VVQ1000-FPG-02 1 set
∗: VQ1000-FPG-C6M5-D 2 pcs.

Specifications

Max. operating pressure	0.8 MPa
Min. operating pressure	0.15 MPa
Ambient and fluid temperature	−5 to 50°C
Flow rate characteristics: C	0.60 dm³/(s·bar)
Max. operating frequency	180 c.p.m

∗: Based on JIS B 8375-1981 (Supply pressure: 0.5 MPa)

Dimensions

Single unit

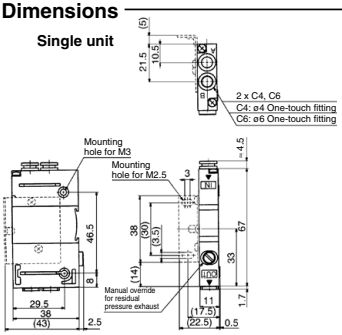

Manifold

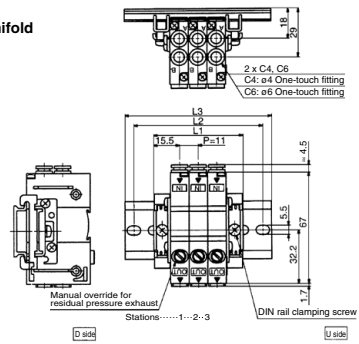

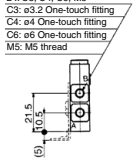

Dimensions Formula L1 = 11n + 20 n: Station (Max. 24 stations)

L \ n	1	2	3	4	5	6	7	8	9	10	11	12
L1	31	42	53	64	75	86	97	108	119	130	141	152
L2	50	62.5	75	87.5	100	112.5	125	125	137.5	150	162.5	175
L3	60.5	73	85.5	98	110.5	123	135.5	135.5	148	160.5	173	185.5

L \ n	13	14	15	16	17	18	19	20	21	22	23	24
L1	163	174	185	196	207	218	229	240	251	262	273	284
L2	187.5	187.5	200	212.5	225	237.5	250	250	262.5	275	287.5	300
L3	198	198	210.5	223	235.5	248	260.5	260.5	273	285.5	298	310.5

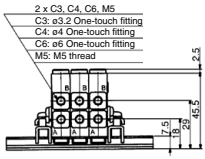

How to Order

Single unit, double check block

VQ1000−FPG−C4 M5−F

IN side port size

C4	ø4 One-touch fitting
C6	ø6 One-touch fitting

OUT side port size

M5	M5 thread
C3	ø3.2 One-touch fitting
C4	ø4 One-touch fitting
C6	ø6 One-touch fitting

Option

Nil	None
F	With bracket
D	DIN rail mounting (For manifold)
N	With name plate

∗: When two or more symbols are specified, indicate them alphabetically. Example) -DN

<Example>

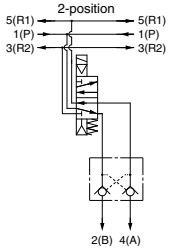

Manifold (DIN rail mounting)

VVQ1000−FPG−06

When ordering a double check block, order the DIN rail mounting [-D]

Stations

01	1 station
⋮	⋮
16	16 stations

<Example>

VVQ1000-FPG-06···6-station manifold
∗: VQ1000-FPG-C4M5-D: 3 sets } Double check block
∗: VQ1000-FPG-C6M5-D: 3 sets } Double check block

Bracket Assembly

Part no.	Tightening torque
VQ1000-FPG-FB	0.22 to 0.25 N·m

⚠Caution

- Air leakage from the pipe between the valve and cylinder or from the fittings will prevent the cylinder from stopping for long periods of time. Check the leakage using neutral household detergent, such as dish washing soap.
  Also, check the cylinder's tube gasket, piston seal and rod seal for air leakage.
- Since One-touch fittings allow slight air leakage, screw piping (with M5 thread) is recommended when stopping the cylinder in the middle for long periods of time.
- M5 fitting assembly is attached, not incorporated into the double check block. After screwing in the M5 fittings, mount the assembly on the double check block. {Tightening torque: 0.8 to 1.2 N·m}
- If the exhaust of the double check block is restricted too much, the cylinder may not operate properly and may not stop intermediately.
- Set the cylinder load so that the cylinder pressure will be within two times that of the supply pressure.

S0700 Series
Specific Product Precautions 1

Be sure to read this before handling the products. For safety instructions and 3/4/5-port solenoid valve precautions, refer to the "Handling Precautions for SMC Products" and the "Operation Manual" on the SMC website: https://www.smcworld.com

Manual Override

⚠ Warning

The manual override is used for switching the main valve.

Push type (Tool required)

Push down on the manual override button with a small screwdriver until it stops.

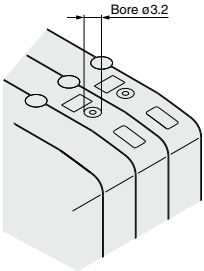

How to Mount Valve

⚠ Caution

Tighten the bolts firmly to stop the gasket from coming away from the valve using the appropriate torque as shown on the following table.

Proper tightening torque [N·m]
0.17 to 0.23

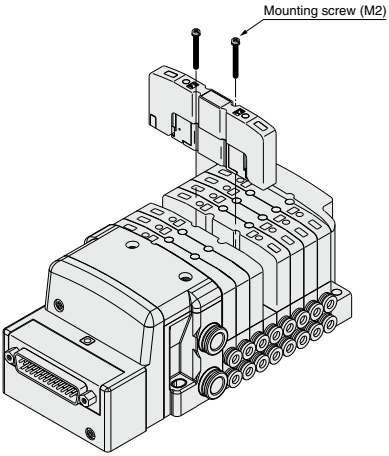

How to Mount/Remove DIN Rail

⚠ Caution

Removal

1) Loosen the clamping screw of the end plate on both sides.
2) Lift side (a) of the manifold base and slide the end plate in the direction of ② shown in the figure to remove.

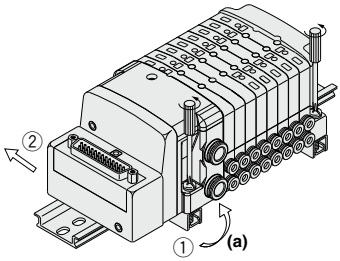

Mounting

1) Hook side (b) of the manifold base on the DIN rail.
2) Press down side (a) and mount the end plate on the DIN rail. Tighten the clamping screw on side (a) of the end plate. The proper tightening torque for screws is 0.4 to 0.6 N·m.

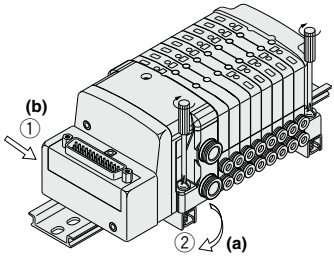

How to Change Connector Entry Direction

⚠ Caution

<Plug-in manifold stacking base>

The connector entry direction can be changed from the top to the side by simply pressing the manual release button.
It is not necessary to use the manual release button when switching from the side to the top.

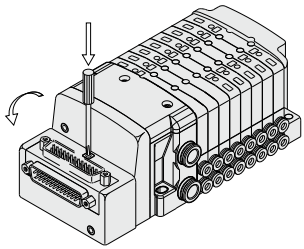

S0700 Series
Specific Product Precautions 2

Be sure to read this before handling the products. For safety instructions and 3/4/5-port solenoid valve precautions, refer to the "Handling Precautions for SMC Products" and the "Operation Manual" on the SMC website: https://www.smcworld.com

Built-in Silencer Element

⚠ Caution

<Plug-in type only>

A silencer element is incorporated in the end plate on both sides of the base. A dirty and choked element may reduce cylinder speed or cause a malfunction. Clean or replace the dirty element.

Element Part No.

Type	Element part no.
Slim compact plug-in manifold bar base SS0751	SS0700-83A
Plug-in manifold stacking base SS0750	SS0700-82A

∗: Above part number is for a set of ten elements.

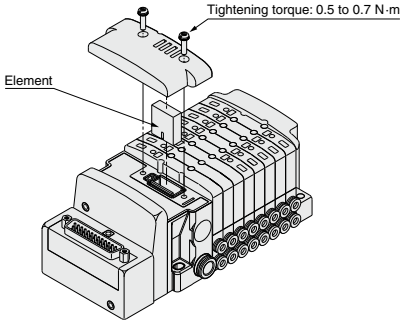

Remove the cover from the side of the end plate and remove the old element with a flat blade screwdriver, etc.

How to Replace Cylinder Port Fittings

⚠ Warning

The cylinder port fittings are a cassette for easy replacement. The fittings are blocked by a clip inserted from the top of the valve.
Remove the clip with a flat blade screwdriver to remove fittings. For replacement, insert the fitting assembly until it strikes against the inside wall and then re-insert the clip to the specified position.

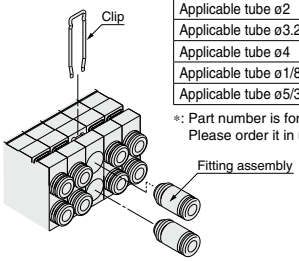

Applicable tube O.D.	One-touch fitting part no.
Applicable tube ø2	VVQ0000-50A-C2
Applicable tube ø3.2	VVQ0000-50A-C3
Applicable tube ø4	VVQ0000-50A-C4
Applicable tube ø1/8"	VVQ0000-50A-N1
Applicable tube ø5/32"	VVQ0000-50A-N3

∗: Part number is for one fitting assembly.
Please order it in units of 10 pieces.

Internal Wiring Specifications

⚠ Caution

Light/surge voltage suppressor

No polarity by adopting non-polar light.

Single

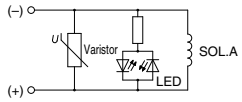

Double, Dual 3-port

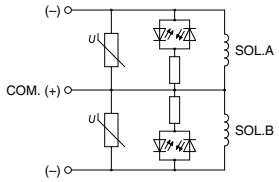

∗: Coil surge voltage generated when OFF is about –60 V. Please contact SMC separately for further suppression of the coil surge voltage.

Slim type plug-in manifold
A: Red
B: Green

Plug-in manifold
Indicator light
A side

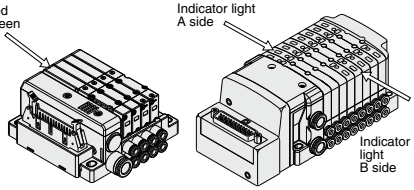

Surge Voltage Intrusion

⚠ Caution

The surge voltage created when the power supply is cut off could apply to the de-energized load equipment through the output circuit. In cases where the energized load equipment has a larger capacity (power consumption) and is connected to the same power supply as the product, the surge voltage could malfunction and/or damage the internal circuit element of the product and the internal device of the output equipment. To avoid this situation, place a diode which can suppress the surge voltage between the COM lines of the load equipment and output equipment.

S0700 Series
Specific Product Precautions 3

Be sure to read this before handling the products. For safety instructions and 3/4/5-port solenoid valve precautions, refer to the "Handling Precautions for SMC Products" and the "Operation Manual" on the SMC website: https://www.smcworld.com

Serial EX500/EX250/EX260 Precautions

⚠ Warning

1. **These products are intended for use in general factory automation equipment.**
   Avoid using these products in machinery/equipment which affects human safety, and in cases where malfunction or failure can result in extensive damage.
2. **Do not use in an explosive atmosphere, environment with inflammable gases, or corrosive atmosphere. This can cause injury or fire, etc.**
3. **Work such as transporting, installing, piping, wiring, operation, control and maintenance should be performed by personnel with specialized knowledge. There is a danger of electrocution, injury or fire, etc.**
4. **Install an external emergency stop circuit that can promptly stop operation and shut off the power supply.**
5. **Do not remodel these products, as there is a danger of injury and damage.**

⚠ Caution

1. **Read the operation manual carefully, strictly observe the precautions and operate within the range of the specifications.**
2. **Do not drop these products or submit them to strong impacts. This can cause damage, failure or malfunction, etc.**
3. **In locations with poor electrical conditions, take steps to ensure a steady flow of the rated power supply. Use of a voltage outside of the specifications can cause malfunction, damage to the unit, electrocution or fire, etc.**
4. **Do not touch connector terminals or internal substrates when current is being supplied. There is a danger of malfunction, damage to the unit or electrocution if connector terminals or internal substrates are touched when current is being supplied.**
   Be sure that the power supply is OFF when adding or removing manifold valves or input blocks, etc., or when connecting or disconnecting connectors.
5. **Operate at an ambient temperature that is within the specifications. Even when the ambient temperature range is within the specifications, do not use in locations where there are rapid temperature changes.**
6. **Keep wire scraps and other extraneous material from getting inside these products. This can cause fire, failure or malfunction, etc.**
7. **This product is not constructed to withstand water or oil penetration. Therefore it should be fitted with a protective cover when used in environments where it could be exposed to water or oil splash.**
8. **Observe the proper tightening torque.**
   There is a possibility of damaging threads if tightening exceeds the tightening torque range.
9. **Adjustment/Operation**
   DIP switches and rotary switches should be set with a small watchmakers' screwdriver.

⚠ Caution

10. **Provide adequate protection when operating in locations such as the following:**
    - Where noise is generated by static electricity, etc.
    - Where there is a strong electric field
    - Where there is a danger of exposure to radiation
    - When in close proximity to power supply lines
11. **When these products are installed in equipment, provide adequate protection against noise by using noise filters, etc.**
12. **Since these products are components that are used after installation in other equipment, the customer should confirm conformity to EMC directives for the finished product.**
13. **Do not remove the name plate.**
14. **Perform periodic inspections and confirm normal operation. It may otherwise be impossible to guarantee safety due to unexpected malfunction or erroneous operation.**
15. **For the EX260-SPN□, the side of the SI unit may become hot.**
    It may cause burns.
16. **Do not use this product in places where there are cyclic temperature changes.**
    In case that the cyclic temperature is beyond normal temperature changes, the inside product is likely to be adversely affected.
17. **Do not use in direct sunlight.**
    Do not use in direct sunlight. It may cause a malfunction or damage.
18. **Do not use in places where there is radiated heat around it.**
    Such a place is likely to cause a malfunction.

Safety Instructions on Power Supply

⚠ Caution

1. **Operation is possible with a single power supply or a separate power supply. However, be sure to provide two wiring systems (one for solenoid valves, and one for input and control units).**
2. **When applicable to UL, use a Class 2 power supply unit conforming to UL1310 for direct current power supply.**

S0700 Series
Specific Product Precautions 4

Be sure to read this before handling the products. For safety instructions and 3/4/5-port solenoid valve precautions, refer to the "Handling Precautions for SMC Products" and the "Operation Manual" on the SMC website: https://www.smcworld.com

Serial EX500/EX250/EX260 Precautions

Safety Instructions on Cable

⚠ Caution

1. **Be careful of miswiring. This can cause malfunction, damage and fire in the unit.**
2. **Do not connect cables during energizing.**
   This could damage or cause malfunction to the SI unit.
3. **To prevent noise and surge in signal lines, keep all wiring separate from power lines and high voltage lines. Otherwise, this can cause malfunction.**
4. **Check wiring insulation, as defective insulation can cause damage to the unit due to excessive voltage or current.**
5. **Do not bend or pull cables repeatedly, and do not place heavy objects on them or allow them to be pinched. This can cause broken lines.**

Serial EX510 Precautions

Design/Selection

⚠ Warning

1. **Use within the allowable voltage range.**
   Using beyond the allowable voltage range is likely to cause the units and connecting devices to be damaged or to malfunction.
2. **Do not use beyond the specification range.**
   Using beyond the specification range is likely to cause a fire, malfunction, or breakdown in the units and connecting devices. Check the specifications before handling.
3. **Establish a backup system beforehand, which employs fail-safe concepts such as multiple equipment and devices to prevent breakage or malfunction of this product.**
4. **Provide an external emergency stop circuit that will immediately stop an operation and cut off the power supply.**
5. **When using for an interlock circuit:**
   - Provide a double interlock which is operated by another system (such mechanical protection function).
   - Perform an inspection to check that it is working properly because it can cause possible injuries.

⚠ Caution

1. **Keep the surrounding space free for maintenance.**
   When designing a system, take into consideration the amount of free space needed for performing maintenance.
2. **When applicable to UL, use a Class 2 power supply unit conforming to UL1310 for direct current power supply.**
3. **This product is one of the components to be equipped into a final equipment. Confirm the adaptability to the EMC directive as the whole equipment by customers themselves.**
4. **The power supply for the Gateway unit should be 0 V as the standard for both power supply for outputs as well as inputs and for the control unit of the Gateway.**

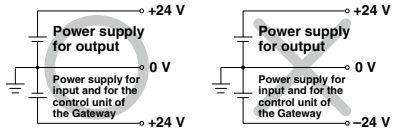

Mounting

⚠ Caution

1. **Do not drop, bump, or apply excessive impact.**
   Otherwise, the unit can become damaged, malfunction, or fail to function.
2. **Hold the body while handling this product.**
   Otherwise, the unit can become damaged, malfunction, or fail to function.
3. **Observe the tightening torque range.**
   Tightening outside of the allowable torque range will likely damage the product.
4. **Do not install a unit in a place where it can be used as a scaffold.**
   Applying any excessive load such as stepping on the unit by mistake or placing a foot on it, will cause it to break.

S0700 Series
Specific Product Precautions 5

Be sure to read this before handling the products. For safety instructions and 3/4/5-port solenoid valve precautions, refer to the "Handling Precautions for SMC Products" and the "Operation Manual" on the SMC website: https://www.smcworld.com

Serial EX510 Precautions

Wiring

⚠ Warning

1. **Avoid miswiring.**
   If miswired, there is a probability of damaging units or connecting devices.
2. **Do not wire while energizing the product.**
   It is likely to damage the units or connecting devices.
3. **Avoid wiring the power line and high pressure line in parallel.**
   Noise or surge produced by signal line resulting from the power line or high pressure line could cause a malfunction. Wiring of the reduced wiring system and the power line or high pressure line should be separated from each other.
4. **Check the wiring insulation.**
   Inferior insulation (contact with other circuit, insulation between terminals, etc.) will likely cause damage to the units or connecting devices due to excessive voltage or the influx of current.

⚠ Caution

1. **Take measures to avoid applying repeated bending force or pulling force to the cable.**
   Also, pay attention not to place any heavy matter on the cable or clipping. It is likely to cause a broken wire.
2. **Check the grounding to maintain the safety of the reduced wiring system and for anti-noise performance.**
   Grounding should be close to units and keep the grounding distance short.

Operating Environment

⚠ Warning

1. **Do not use this product in the presence of dust, particles, water, chemicals, and oil.**
   Use with such materials is likely to cause a malfunction or breakage.
2. **Do not use this product in the presence of a magnetic field.**
   Use in such an environment is likely to cause a malfunction.
3. **Do not use this product in an atmosphere containing an inflammable gas, explosive gas, or corrosive gas.**
   Use in such an atmosphere is likely to cause a fire, explosion, or corrosion. This wire-reduced system is not explosion-proof.
4. **Do not use this product in places where there are cyclic temperature changes.**
   In case that the cyclic temperature is beyond normal temperature changes, the internal unit is likely to be adversely affected.
5. **Do not use this product in places where there is radiated heat around it.**
   Such a place is likely to cause a malfunction or breakage.
6. **Do not use this product near sources that generate a surge which exceeds the benchmark test, even though this product is CE/UKCA-marked certified.**
   The internal circuit components are likely to deteriorate or become damaged when there are equipment (solenoid type lifter, high frequency guided furnace, motor, etc.) which generate a large surge around the reduced wiring system. Take measures to prevent an electrical surge and avoid having the wires touch each other.

Operating Environment

⚠ Warning

7. **Use the product type that has an integrated surge absorption element when directly driving a load which generates surge voltage by relay or solenoid valves.**
8. **The reduced wiring system should be installed in places with no vibration or shock.**
   Such a place is likely to cause a malfunction or breakage.
9. **Do not use in direct sunlight.**
   Do not use in direct sunlight. It may cause a malfunction or damage.
10. **Use this product within the specified ambient temperature range.**
    This may cause a malfunction.

Adjustment/Operation

⚠ Warning

1. **Do not short-circuit a load.**
   If a load is short-circuited, excessive current can cause damage to the connected devices. The fuse of the input unit will melt. The output and SI unit will activate its overcurrent protection function. However, they cannot cover all modes, so damage is likely to occur.
2. **Do not manipulate or perform settings with wet hands.**
   Performing such activity will likely cause an electrical shock.

⚠ Caution

1. **DIP switches and rotary switches should be set with a small watchmakers' screwdriver.**

Maintenance

⚠ Warning

1. **Do not disassemble, modify (including circuit board replacement) or repair this product.**
   Such actions are likely to cause injuries or breakage.
2. **Perform periodic inspection.**
   Confirm that wiring or screws are not loose.
   Otherwise, unpredicted malfunction in the system composition devices is likely to occur.
3. **When an inspection is performed.**
   - Turn off the power supply.
   - Stop the supplied fluid and discharge the fluid in the piping and confirm the release to the atmosphere before performing an inspection. It is likely to cause injuries.

⚠ Caution

1. **Do not wipe this product with chemicals such as benzine or thinner.**
   Using such chemicals is likely to cause damage.

S0700 Series
Specific Product Precautions 6

Be sure to read this before handling the products. For safety instructions and 3/4/5-port solenoid valve precautions, refer to the "Handling Precautions for SMC Products" and the "Operation Manual" on the SMC website: https://www.smcworld.com

Serial EX600 Precautions

Design/Selection

⚠ Warning

1. **Use this product within the specification range.**
   Using beyond the specified specifications range can cause fire, malfunction, or damage to the system.
   Check the specifications when operating.
2. **When using for an interlock circuit:**
   - **Provide a multiple interlock system which is operated by another system (such as mechanical protection function).**
   - **Perform an inspection to confirm that it is working properly.**

   This may cause possible injury due to malfunction.

⚠ Caution

1. **When applicable to UL, use a Class 2 power supply unit conforming to UL1310 for direct current power supply.**
2. **Use this product within the specified voltage range.**
   Using beyond the specified voltage range is likely to cause the units and connecting devices to be damaged or to malfunction.
3. **The power supply for the unit should be 0 V as the standard for both power supply for output as well as power supply for control/input.**

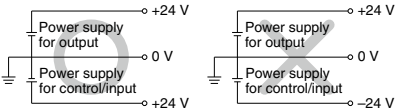

4. **Do not install a unit in a place where it can be used as a foothold.**
   Applying any excessive load such as stepping on the unit by mistake or placing a foot on it, will cause it to break.
5. **Keep the surrounding space free for maintenance.**
   When designing a system, take into consideration the amount of free space needed for performing maintenance.
6. **Do not remove the name plate.**
   Improper maintenance or incorrect use of operation manual can cause failure and malfunction. Also, there is a risk of losing conformity with safety standards.
7. **Beware of inrush current when the power supply is turned on.**
   Some connected loads can apply an initial charge current which will trigger the over current protection function, causing the unit to malfunction.

Mounting

⚠ Caution

1. **When handling and assembling units:**
   - **Do not touch the sharp metal parts of the connector or plug.**
   - **Do not apply excessive force to the unit when disassembling.**
     The connecting portions of the unit are firmly joined with seals.
   - **When joining units, take care not to get fingers caught between units.**
     Injury can result.

Mounting

⚠ Caution

2. **Do not drop, bump, or apply excessive impact.**
   Otherwise, the unit can become damaged, malfunction, or fail to function.
3. **Observe the tightening torque range.**
   Tightening outside of the allowable torque range will likely damage the product.
   IP67 protection class cannot be guaranteed if the screws are not tightened to the specified torque.
4. **When lifting a large size manifold solenoid valve unit, take care to avoid causing stress to the valve connection joint.**
   The connection parts of the unit may be damaged.
   Because the unit may be heavy, carrying and installation should be performed by more than one operator to avoid strain or injury.
5. **When placing a manifold, mount it on a flat surface.**
   Torsion in the whole manifold can lead to trouble such as air leakage or defective insulation.

Wiring

⚠ Caution

1. **Check the grounding to maintain the safety of the reduced wiring system and for anti-noise performance.**
   Provide a specific grounding as close to the unit as possible to minimize the distance to grounding.
2. **Avoid repeatedly bending or stretching the cable and applying a heavy object or force to it.**
   Wiring applying repeated bending and tensile stress to the cable can break the circuit.
3. **Avoid miswiring.**
   If miswired, there is a danger of malfunction or damage to the reduced wiring system.
4. **Do not wire while energizing the product.**
   There is a danger of malfunction or damage to the reduced wiring system or input/output equipment.
5. **Avoid wiring the power line and high pressure line in parallel.**
   Noise or surge produced by signal line resulting from the power line or high pressure line could cause malfunction.
   Wiring of the reduced wiring system or input/output device and the power line or high pressure line should be separated from each other.
6. **Check the wiring insulation.**
   Defective insulation (contact with other circuits, improper insulation between terminals, etc.) may cause damage to the reduced wiring system or input/output device due to excessive voltage or current.

S0700 Series
Specific Product Precautions 7

Be sure to read this before handling the products. For safety instructions and 3/4/5-port solenoid valve precautions, refer to the "Handling Precautions for SMC Products" and the "Operation Manual" on the SMC website: https://www.smcworld.com

Serial EX600 Precautions

Wiring

⚠ Caution

7. When a reduced wiring system is installed in machinery/equipment, provide adequate protection against noise by using noise filters, etc.

Noise in signal lines may cause a malfunction.

8. When connecting wires of input/output device or handheld terminal, prevent water, solvent or oil from entering inside from the connecter section.

This can cause damage, equipment failure or malfunction.

9. Avoid wiring patterns in which excessive stress is applied to the connector.

This may cause malfunction or damage to the unit due to contact failure.

Operating Environment

⚠ Warning

1. Do not use in an atmosphere containing an inflammable gas or explosive gas.

Use in such an atmosphere is likely to cause a fire or explosion. This system is not explosion-proof.

⚠ Caution

1. Select the proper type of enclosure according to the environment of operation.

IP65/67 is achieved when the following conditions are met.

1) Provide appropriate wiring between units using electrical wiring cables, communication connectors and cables with M12 connectors.
2) Suitable mounting of each unit and manifold valve.
3) Be sure to mount a seal cap on any unused connectors.

If using in an environment that is exposed to water splashes, please take measures such as using a cover.
When the enclosure is IP40, do not use in an operating environment or atmosphere where it may come in contact with corrosive gas, chemical agents, seawater, water, or water vapor.
When connected to the EX600-D□□E or EX600-D□□F, manifold enclosure is IP40.
Also, the Handheld Terminal conforms to IP20, so prevent foreign matter from entering inside, and water, solvent or oil from coming in direct contact with it.

2. Provide adequate protection when operating in locations such as the following.

Failure to do so may cause damage or malfunction.
The effect of countermeasures should be checked in individual equipment and machine.

1) Where noise is generated by static electricity, etc.
2) Where there is a strong electric field
3) Where there is a danger of exposure to radiation
4) When in close proximity to power supply lines

Operating Environment

⚠ Caution

3. Do not use in an environment where oil and chemicals are used.

Operating in environments with coolants, cleaning solvents, various oils or chemicals may cause adverse effects (damage, malfunction) to the unit even in a short period of time.

4. Do not use in an environment where the product could be exposed to corrosive gas or liquid.

This may damage the unit and cause it to malfunction.

5. Do not use in locations with sources of surge generation.

Installation of the unit in an area around the equipment (electromagnetic lifters, high frequency induction furnaces, welding machine, motors etc.), which generates the large surge voltage could cause to deteriorate an internal circuitry element of the unit or result in damage. Implement countermeasures against the surge from the generating source, and avoid touching the lines with each other.

6. Use the product type that has an integrated surge absorption element when directly driving a load which generates surge voltage by relay, solenoid valves or lamp.

When a surge generating load is directly driven, the unit may be damaged.

7. The product is CE/UKCA marked, but not immune to lightning strikes. Take measures against lightning strikes in your system.

8. Keep dust, wire scraps and other extraneous material from getting inside the product.

This may cause a malfunction or damage.

9. Mount the unit in such locations, where no vibration or shock is affected.

This may cause a malfunction or damage.

10. Do not use in places where there are cyclic temperature changes.

In case that the cyclic temperature is beyond normal temperature changes, the internal unit is likely to be adversely effected.

11. Do not use in direct sunlight.

Do not use in direct sunlight. It may cause a malfunction or damage.

12. Use this product within the specified ambient temperature range.

This may cause a malfunction.

13. Do not use in places where there is radiated heat around it.

Such a place is likely to cause a malfunction.

S0700 Series
Specific Product Precautions 8

Be sure to read this before handling the products. For safety instructions and 3/4/5-port solenoid valve precautions, refer to the "Handling Precautions for SMC Products" and the "Operation Manual" on the SMC website: https://www.smcworld.com

Serial EX600 Precautions

Adjustment/Operation

⚠ Warning

1. **Do not perform operation or setting with wet hands.**
   There is a risk of electrical shock.

<Handheld Terminal>

2. **Do not apply pressure to the LCD.**
   There is a possibility of the crack of LCD and injuring.
3. **The forced input/output function is used to change the signal status forcibly. When operating this function, be sure to check the safety of the surroundings and installation.**
   Otherwise, injury or equipment damage could result.
4. **Incorrect setting of parameters can cause malfunction. Be sure to check the settings before use.**
   This may cause injury or equipment damage.

⚠ Caution

1. **Use a watchmakers' screwdriver with thin blade for the setting of each switch of the SI unit.**
   When setting the switch, do not touch other unrelated parts.
   This may cause parts damage or malfunction due to a short-circuit.
2. **Provide adequate setting for the operating conditions.**
   Failure to do so could result in malfunction.
   Refer to the operation manual for setting of the switches.
3. **For details on programming and address setting, refer to the manual from the PLC manufacturer.**
   The content of programming related to protocol is designed by the manufacturer of the PLC used.

<Handheld Terminal>

4. **Do not press the setting buttons with a sharp pointed object.**
   This may cause damage or malfunction.
5. **Do not apply excessive load and impact to the setting buttons.**
   This may cause damage, equipment failure or malfunction.

When the order does not include the SI unit, the valve plate to connect the manifold and SI unit is not mounted. Use attached valve fixing screws and mount the valve plate.
(Tightening torque: 0.6 to 0.7 N·m)

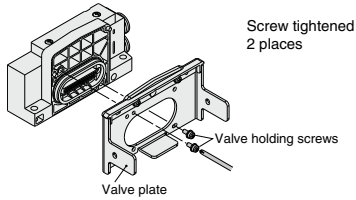

Maintenance

⚠ Warning

1. **Do not disassemble, modify (including circuit board replacement) or repair this product.**
   Such actions are likely to cause injuries or breakage.
2. **When an inspection is performed,**
   - **Turn off the power supply.**
   - **Stop the air supply, exhaust the residual pressure in piping and verify that the air is released before performing maintenance work.**

   Unexpected malfunction of system components and injury can result.

⚠ Caution

1. **When handling and replacing the unit:**
   - **Do not touch the sharp metal parts of the connector or plug.**
   - **Do not apply excessive force to the unit when disassembling.**
     The connecting portions of the unit are firmly joined with seals.
   - **When joining units, take care not to get fingers caught between units.**
     Injury can result.
2. **Perform periodic inspection.**
   Unexpected malfunction in the system composition devices is likely to occur due to malfunction of machinery or equipment.
3. **After maintenance, make sure to perform an appropriate functionality inspection.**
   In cases of abnormality such as faulty operation, stop operation. Unexpected malfunction in the system composition devices is likely to occur.
4. **Do not use benzene and thinner for cleaning units.**
   Damage to the surface or erasure of the display can result. Wipe off any stains with a soft cloth.
   If the stain is persistent, wipe off with a cloth soaked in a dilute solution of neutral detergent and wrung out tightly, and then finish with a dry cloth.

Troubleshooting

Trouble	In the event of product failure, take remedial measures by checking the following items as detailed below.	Cause	Measures
Operating failure The air supply direction has not been changed.	**Does the product operate by pressing a manual button?** → NO → ➡ ↓ YES **Does the indicator light illuminate when energizing?** → NO → ➡ ↓ YES ➡	1) Slide failure or sticking of the main valve Foreign matter from the air source has been caught in the main valve and has caused slide failure and sticking.	• Replace the valve. • Purify the air source. (Refer to the 3/4/5 Port Solenoid Valves Precautions 6 on page 13.)
		2) Pressure drop The pressure of the air source decreases and fails to reach the minimum operating pressure of the valve, resulting in operating failure.	Adjust the pressure of the valve within the operating pressure range.
		1) Electric system error • Sequencer failure • Incorrect wiring • Open fuse and lead wire disconnection • Voltage drop	Check each item and take applicable measure.
		1) Voltage drop The product may not operate due to a voltage drop even when its indicator light remains illuminated.	Check the voltage and take applicable measure if decreased.
		2) Current leakage The product does not shift from off to on due to the residual voltage.	Check the residual voltage, which shall be 2% or less of rated voltage.
		3) Pilot valve failure • Foreign matter from the air source has entered the inside of the pilot valve and has caused operating failure. • Open coil circuit	• Replace the valve. • Purify the air source. (Refer to the 3/4/5 Port Solenoid Valves Precautions 6 on page 13.)
Response failure The product operates, but has a time delay.		1) Current leakage The response of the product was delayed due to the residual voltage.	Check the residual voltage, which should be 2% or less of the rated voltage.
		2) Clogging of the filter element of the manifold	• Clean or replace the element.
		3) Foreign matter from the air source has entered the main valve and has caused slide failure and sticking.	• Replace the valve. • Purify the air source. (Refer to the 3/4/5 Port Solenoid Valves Precautions 6 on page 13.)

Trouble	In the event of product failure, take remedial measures by checking the following items as detailed below.	Cause	Measures
Air leakage	**Check the part where the air is leaking.** **1. Leakage between the valve and base**	1-1) The clamping screw or mounting bolt is loose.	Tighten the clamping screw. Proper tightening torque 0.17 to 0.23 N·m Replace the gasket if it was damaged.
		1-2) The gasket got caught.	Replace the gasket. <Part no. of gasket and spare parts> S0700-GS-5 (10 sets) Plug-in Type Stacking Base S0700-GS-3 (10 sets) Slim Compact Bar Base
	2. Air leakage from the One-touch fitting	2-1) The tube did not bottom out. 2-2) The tube had a flaw. 2-3) The tube end was cut uneven.	Check each item and take applicable measures.
		2-4) The packing of the One-touch fitting was damaged.	Replace the One-touch fitting assembly. <Part no. of One-touch fitting assembly> VVQ0000-50A-C2 VVQ0000-50A-C3 VVQ0000-50A-C4 VVQ0000-50A-N1 VVQ0000-50A-N3
	3. Leakage from R port	3-1) The mounting screw is loose.	Tighten the mounting bolt. Proper tightening torque • 0.17 to 0.23 N·m Replace the gasket if it was damaged.
		3-2) Foreign matter from the air source got caught in the main valve and increased the internal leakage.	• Replace the valve. Purify the air source. (Refer to the 3/4/5 Port Solenoid Valves Precautions 6 on page 13.)