TeSys

> Control > Protect > Power > Active

Catalog 2024
Innovative and connected solutions for motor starters

1924-2024: 100 years since the world's first contactor by Schneider Electric

September, 2024

se.com/tesys

Life Is On | Schneider Electric

Legal Information

The information provided in this Catalog contains description of Schneider Electric products, solutions and services (“Offer”) with technical specifications and technical characteristics of the performance of the corresponding Offer.

The content of this document is subject to revision at any time without notice due to continued progress in methodology, design and manufacturing.

To the extent permitted by applicable law, no responsibility or liability is assumed by Schneider Electric and its subsidiaries for any type of damages arising out of or in connection with (i) informational content of this Catalog not conforming with or exceeding the technical specifications, or (ii) any error contained in this Catalog, or (iii) any use, decision, act or omission made or taken on basis of or in reliance on any information contained or referred to in this Catalog.

SCHNEIDER ELECTRIC MAKES NO WARRANTY OR REPRESENTATION OF ANY KIND, WHETHER EXPRESS OR IMPLIED, AS TO WHETHER THIS CATALOG OR ANY INFORMATION CONTAINED THEREIN SUCH AS PRODUCTS AND SERVICES WILL MEET REQUIREMENTS, EXPECTATIONS OR PURPOSE OF ANY PERSON MAKING USE THEREOF.

Schneider Electric brand and any trademarks of Schneider Electric and its subsidiaries referred to in this Catalog are property of Schneider Electric or its subsidiaries. All other brands are trademarks of their respective owners.

This Catalog and its content are protected under applicable copyright laws and provided for informative use only. No part of this Catalog may be reproduced or transmitted in any form or by any means (electronic, mechanical, photocopying, recording, or otherwise), for any purpose, without the prior written permission of Schneider Electric.

Copyright, intellectual, and all other proprietary rights in the content of this Catalog (including but not limited to software, audio, video, text, and photographs) rests with Schneider Electric or its licensors. All rights in such content not expressly granted herein are reserved. No rights of any kind are licensed or assigned or shall otherwise pass to persons accessing this information.

Trademarks

QR Code is a registered trademark of DENSO WAVE INCORPORATED in Japan and other countries.

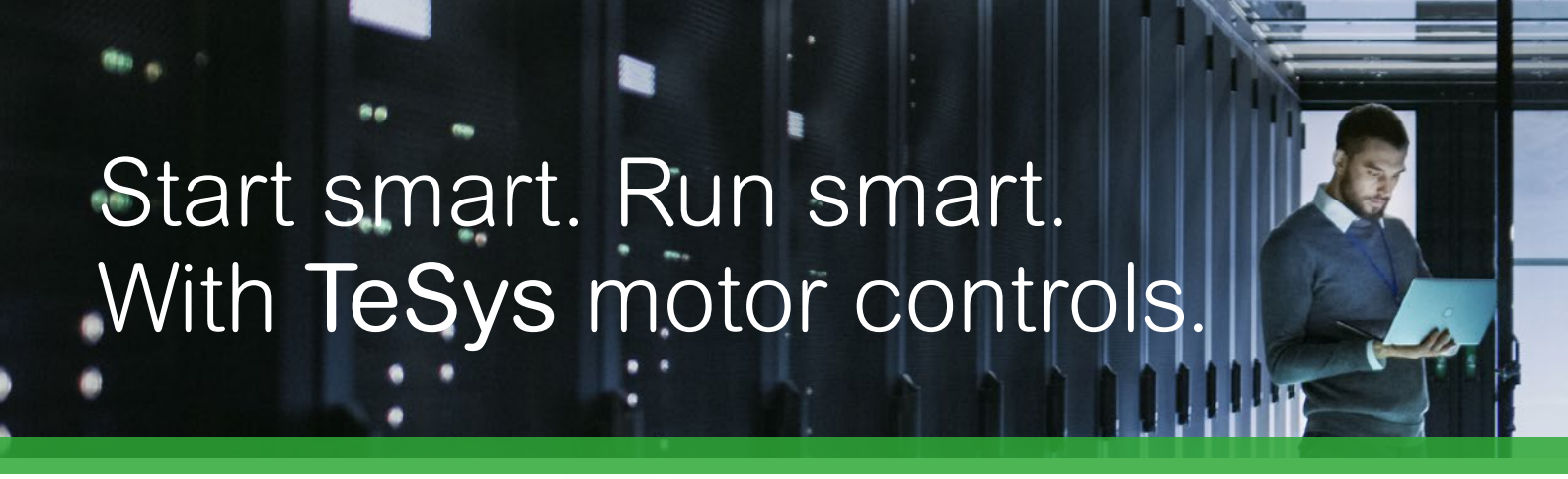

Start smart. Run smart. With TeSys motor controls.

Stay smart with the world's best-selling motor control solutions from the inventor of the world's first contactor - Schneider Electric™.

For almost a century, TeSys motor controls have driven the industry with innovations in motor protection, monitoring, and control.

It started with the introduction of the industry's first BAR contactor in 1924, and today, the legacy of innovation is built into every **TeSys** motor control device.

Best-in-class safety and reliability, plug-and-play architecture, and flexible functionality mean TeSys motor control solutions can meet your requirements across a wide range of applications, from the most common to the most advanced.

Wherever you are and anywhere your projects come together, you can trust Schneider Electric and TeSys contactors, circuit breakers, relays, and switches for unmatched reliability, complete compatibility with international standards, and the robust support of the Schneider Electric global supply network.

A Century

of Innovation and Leadership

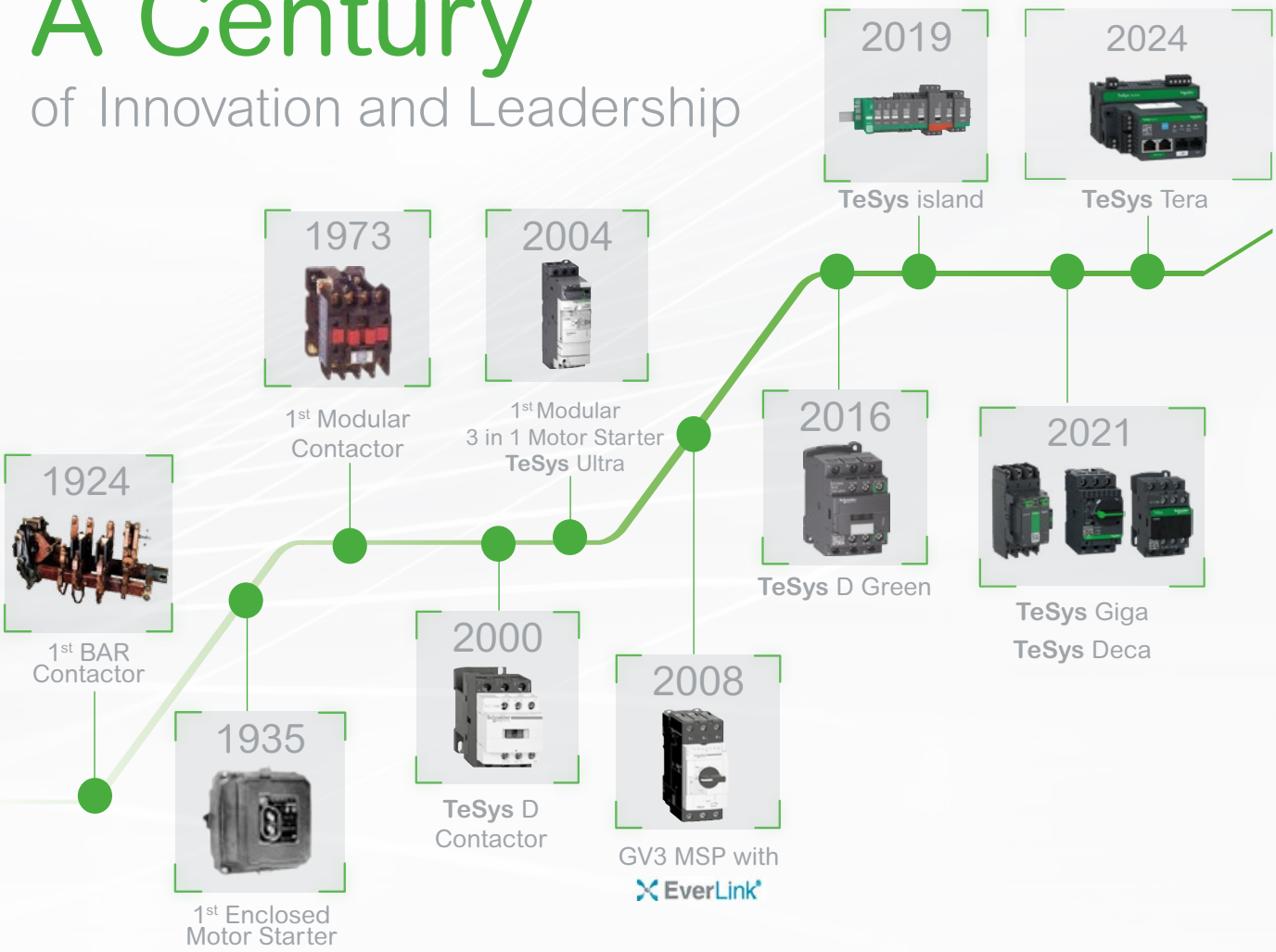

Superior safety for all industries

TeSys motor controls come with all of the isolation, protection and emergency handling you need to comply with international codes. High-contrast covers identify safety-critical devices to prevent inadvertent manual operation. Every TeSys contactor is both mechanically linked and equipped with mirror contacts for safety applications and wherever auxiliary contact state reliability is critical.

HVAC

Ensure 24/7 availability of your HVAC system with reliable products that can reach high ambient temperatures without derating.

Conveying

Decentralize the control cabinet of your conveyor line and benefit from up to 80% space reduction.

Genset

Make certain your generator starts even in the harshest conditions with robust TeSys solutions.

Pumping

Optimize single or multi-drive boosters for industry or infrastructure with energy and cost-effective solutions.

Packaging

Keep pace with the most demanding, high-end packing applications with solutions that can perform 30 million AC53a electrical cycles, like TeSys H.

Oil and Gas

Keep your employees and assets safe and improve uptime in onshore and offshore applications: pipeline operations: LNG and natural gas processing: and refining and petrochemical applications.

Water and Waste-water

Optimize the treatment and delivery of safer water by reducing energy usage and lowering operating costs.

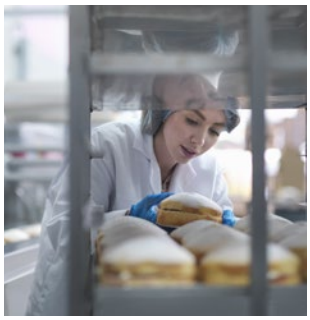

Food and Beverage

Serve your customers with environmentally friendly products to improve sustainability, efficiency, and flexibility, allowing you to adapt to changing customer habits.

Online selection tool

EcoStruxure™ Motor Control Configurator

For Direct-On-Line and Star-Delta starters, motor circuit breakers with advanced protection, motor management relays, configurations for total coordination, drives, and soft starters.

No matter what kind of starting method you need, our online EcoStruxure™ Motor Control Starter Configurator will help you to quickly and easily select the optimal combination of components to ensure maximized motor safety, protection, and uptime.

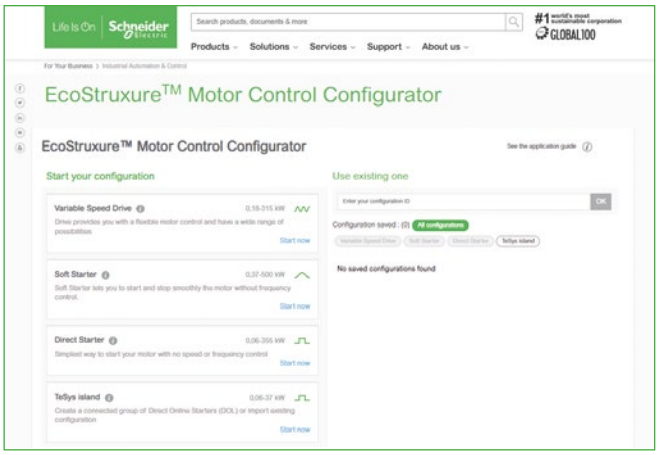

Scan or click on the QR code

NEWS

EDITO

Welcome to your NEW TeSys catalog!
Your catalog continues to evolve, as it does year after year.

- The first evolution concerns the products, it will bring a Premium design to your control panels thanks to the main TeSys components that now present the same visual homogeneity.
- The structuring of the components naming is the second point of evolution, it answers the need to classify the products by function and by range in the selection tools, the catalog and the Schneider Electric website (www.se.com).
- The last new feature is the presence of a product reference table at the end of the commercial part of each chapter (before the information for designers). It allows you to quickly check the availability of a product variant and access its technical data sheet online.

NEW VISUAL ASPECT

The design of the TeSys core offer is evolving. Circuit breakers, contactors and several other components are now sharing a modern look giving the control panel a new and qualitative visual aspect.
Schneider Electric's identity is fully revealed by the green parts.

NEW TESYS FUNCTION NAMES

TeSys components are grouped by function name, for easier identification.
These functions are related to motor, power, control and protection.

> **TeSys Power:**
Components for powering motors

> **TeSys Control:**
Components for controlling motors

> **TeSys Protect:**
Components for protecting motors

TeSys Active gathers the devices providing built-in communication with motor monitoring and control functions.

> **TeSys Active:**
Connected components for motor circuits

NEWS

NEW TESYS COMPONENT SERIES NAMES

- Series names group conventional components (circuit breakers, contactors, relays, overcurrent relays) by current rating ranges.

- 0 to 16 A > **TeSys** K Series
- 9 to 150 A > **TeSys 'Deca'** Series
- 115 to 800 A > **TeSys 'Giga'** Series.

- TeSys advanced components have a specific classification.

- 0 to 38 A All-in-one starters > **TeSys 'Ultra'** Series
- 0 to 80 A Motor Control/Protection/Monitoring system > **TeSys 'island'** Series.

- Other TeSys component names remain unchanged (TeSys F, TeSys B, TeSys T).

NEW TESYS COMPONENTS FULL NAMES AT A GLANCE

Old names	> NEW names: TeSys Function - Component Series	Complementary indications
TeSys Vario, mini Vario	**TeSys** Control – Switch-disconnectors	
TeSys DF	**TeSys** Power – Fuse carriers	DF type
TeSys GS	**TeSys** Power – Switch-disconnector fuses	
TeSys GV2 **TeSys** GV3 **TeSys** GV4	**TeSys** Power – **Deca** circuit breakers	Frame 2 Frame 3 Frame 4
TeSys GV5 **TeSys** GV6	**TeSys** Power – **Giga** circuit breakers	Frame 5 Frame 6
TeSys D	**TeSys** Control – **Deca** control relays **TeSys** Control – **Deca** contactors	
TeSys LRD, LR9D	**TeSys** Protect – **Deca** overload relays	
TeSys H	**TeSys** Control – **Hybrid** motor starters	
TeSys U	**TeSys** Control – **Ultra** motor starters	
TeSys island	**TeSys** Active – **island** motor starter	

TeSys

Enter in your CATALOGUE

TeSys is an innovative motor control and management solution from the global market leader. TeSys offers connected, efficient products and solutions for switching and protection of motors and electrical loads in compliance with all major global electrical standards.

> ARCHITECTURE of your TeSys catalogue

> PART **A**

ASSEMBLED MOTOR STARTERS
Fully coordinated

A1 — **TeSys** Control
Enclosed switch-disconnectors and motor starters

Enclosed starters

A2 — **TeSys** Control
Open motor starters

Open motor starters

A3 — **TeSys** Control
Hybrid motor starters

Hybrid motor starters

A4 — **TeSys** Control
Ultra motor starters

Ultra motor starters

A5 — Complementary technical information:
coordination and standards

Coordination and standards

TeSys components are classified by function:

> **TeSys** Control
Components for controlling motors

> **TeSys** Protect
Components for protecting motors

> **TeSys** Power
Components for powering motors

> **TeSys** Active
Connected components for motor circuits

This PDF Catalog is updated twice a year. Please check on the link below that you are using the last version.
Ref. MKTED210011EN

Life Is On | Schneider Electric

> PART B

COMPONENTS for conventional solutions:

TeSys K series
*(ex-**TeSys** K, LRK)*
- 0 to 16 A (AC-3)

TeSys Deca series
*(ex-**TeSys** GV2, GV3, GV4, **TeSys** D, LRD, LR9D)*
- 9 to 150 A (AC-3)

TeSys Giga series
*(ex-**TeSys** GV5, GV6, **TeSys** LRG)*
- 185 to 800 A (AC-3)

B1 **Linergy** BZ, HK Busbar systems

Power busbar systems

B2 GV, LAD, Ultra
Wiring systems for motor starters

Wiring systems

B3 **TeSys** Control
Switch-disconnectors

Switch-disconnectors

B4 **TeSys** Power
Fuse carriers

Fuse carriers

B5 **TeSys** Power
Switch-disconnector fuses

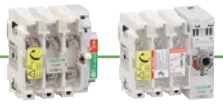

Switch-disconnector fuses

B6 **TeSys** Power
Deca, Giga and Modular
Motor circuit breakers

Motor circuit breakers

B7 **TeSys** Control
SK, K, Deca Control relays

Control relays

B8 **TeSys** Control
SK, K, SKGC, Deca, Modular
and other Contactors

Contactors

B9 **TeSys** Control
Giga High power contactors

High power contactors

B10 **TeSys** Control
F High power contactors

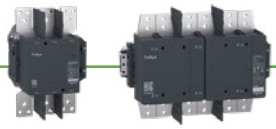

High power contactors

B11 **TeSys** Protect
LRK, Deca, Giga
Overload relays

Overload relays

> PART C

COMPONENTS for advanced solutions:

TeSys T series
*(ex-**TeSys** T)*
- 0 to 800 A (AC-3)

TeSys island series
*(ex-**TeSys** island)*
- 0 to 80 A (AC-3)

C1 **TeSys** Active
T motor management system

Motor management devices

C2 **TeSys** Active
Island motor starters

Control and monitoring island

Part A

ASSEMBLED MOTOR STARTERS

FULLY COORDINATED

TeSys Control
Enclosed switch-disconnectors and motor starters
From 0.25 to 40 kW

A1/1

TeSys Control
Open motor starters
From 0.06 to 315 kW

A2/1

TeSys Control
Hybrid motor starters
Up to 3 kW
From 9 A to 32 A

A3/1

TeSys Control
Ultra motor starters
From 0.09 to 18.5 kW

A4/1

Complementary technical information:
coordination and standards
A5/1

This PDF Catalog is updated twice a year. Please check on the link below that you are using the last version.
Ref. MKTED210011EN

Life Is On | Schneider Electric

TeSys Control
Enclosed switch-disconnectors and motor starters

Enclosed switch-disconnectors

Content	Page
Product selector	A1/2
Enclosed switch-disconnectors	A1/3

Enclosed standard starters

Product selector	A1/6
Direct-on-line starters Accessories	A1/7
Reverser starters	A1/13
Star-delta starters	A1/15

Enclosed safety starters

Product selector	A1/17
Safety direct-on-line starters Accessories	A1/18
Safety reverser starters	A1/21

Enclosures and components for customer assemblies

Enclosures (with buttons)	A1/26
Components	A1/30

Technical Data for Designers	A1/37

Enclosed Motor Starter Solution Guide

The software to help you to select intuitively your enclosed motor starter solution.

The Enclosed Motor Starter Solution Guide software is available for both PC and iPad.

TeSys Control
Enclosed switch-disconnectors
Introduction & selection table

Range of pre-assembled casings with handle and their rotary switch

They can be fixed on a wall, a panel, or on the chassis of a machine. For simple isolation and/or control of an electrical circuit. Red/yellow handle provides a clear indication of the device safety function [(1)], while black handle is usually dedicated to ON/OFF control.

(1) Conforming to IEC 60947-3 and IEC 60204.

With numerous advantages to meet OEM's most common needs

- IEC or UL
- Multiple ratings and sizes
- IP65
- Additional poles
- Replaceable switch bodies

Selection in 2 steps

1 Identify your need (1 line one or more) in the **Selection criteria** area (example.: Load 5 kW– Emergency Stop - IEC)

2 Choose your enclosed switch-disconnector in the **Solutions** area, note the radical of the product references

Selection criteria								Solutions				
Ithe (A)	Load power (kW)	Circuit isolation	Emergency stop	IP55	IP65	IEC	UL & CSA					See page
10...140	4...45 (400 V)	●			●	●		VBF				A1/3
10...140	4...45 (400 V)	●	●		●	●			VCF			A1/3
10...32	4...15 (400 V)	●	●	●		●				VCFN		A1/3
32...175 (Ithe IEC) 20...115 (Ith UL)	10...50 HP (480 V)	●	●		●	●	●				VC●GUN	A1/4

Life Is On Schneider Electric

PB121471_1.eps

VCF0GE

PB121220.eps

VCF3GE

PB121472.eps

VCF5GEN

PB121473.eps

VCFN12GE

PB121223.eps

VBF0GE

PB121474.eps

VBF6GEN

Control + Disconnection (IEC)

Enclosed switch-disconnectors, ready to be fixed on workshop wall or directly on the machine and wired to main supply circuit and to load.

Functions / Range / Specificities:
- Direct Control: ON/OFF of 3-phase motor (black handle) or ON/Emergency Stop (red handle)
- 23 IEC motor starters, for 3P motors from 4 to 45 kW (10 to 140 A)
- 6 UL motor starters for 3P motors from 5 to 30 HP (240 V)
- Padlockable handle (1 to 3 padlocks – not included)
- Sealable, lockable cover when handle in position 1 (up to 63 A rating).

Included:
- rotary switch-disconnector body
- handle.

Enclosures for ON / Emergency Stop – IP65 – conforming IEC 60947-3, IEC 60204 (1)

Operator Handle	Front plate Dim.	Ithe	Power AC-23 at 400 V	Incorporated switch body	Possible attachments (2)	With ground plate	Reference (3)	Weight	Overall dimensions (4) WxHxD
	mm	A	kW					kg	mm
Red, standard, padlockable with up to 3 padlocks (Ø 4 to Ø 8 shank)	Yellow 60 x 60	10	4	V02	2	No	**VCF02GE**	0.500	90x146x131
						Yes	**VCF02GEGP**	0.560	90x146x131
		16	5.5	V01	2	No	**VCF01GE**	0.500	90x146x131
						Yes	**VCF01GEGP**	0.560	90x146x131
		20	7.5	V0	2	No	**VCF0GE**	0.500	90x146x131
						Yes	**VCF0GEGP**	0.560	90x146x131
		25	11	V1	2	No	**VCF1GE**	0.500	90x146x131
						Yes	**VCF1GEGP**	0.560	90x146x131
		32	15	V2	2	No	**VCF2GE**	0.500	90x146x131
		50	22	V3	3	No	**VCF3GE**	0.930	157x180x152
		63	30	V4	3	No	**VCF4GE**	0.930	157x180x152
Red, long, padlockable with up to 3 padlocks (Ø 4 to Ø 8 shanks)	Yellow 90 x 90	100	37	V5	1	No	**VCF5GEN**	2.190	241x291x190.5
		140	45	V6	1	No	**VCF6GEN**	2.190	241x291x190.5

Protection of sensitive equipment: ground plate available for VCF02GE…VCF1GE – see page A1/5.

Enclosures for ON / Emergency Stop – IP65 - conforming IEC 60947-3 (1)

Operator Handle	Front plate Dim.	Ithe	Power AC-23 at 400 V	Incorporated switch body	Possible attachments (2)	Reference (3)	Weight	Overall dimensions (4) WxHxD
	mm	A	kW				kg	mm
Red padlockable, either by 1 (Ø 8 shank) or by 3 padlocks (Ø 6 shank)	Yellow 60 x 60	10	4	VN12	2	**VCFN12GE**	0.422	82.5x131x106
		16	5.5	VN20	2	**VCFN20GE**	0.422	82.5x131x106
		20	7.5	V0	0	**VCFN25GE**	0.512	82.5x131x106
		25	11	V1	0	**VCFN32GE**	0.512	82.5x131x106
		32	15	V2	0	**VCFN40GE**	0.512	82.5x131x106

Enclosures for ON/OF F– IP65 – conforming IEC 60947-3, IEC 60204 (1)

Black, standard, padlockable with up to 3 padlocks (Ø 4 to Ø 8 shank)	Black 60 x 60	10	4	V02	2	**VBF02GE**	0.500	90x146x131
		16	5.5	V01	2	**VBF01GE**	0.500	90x146x131
		20	7.5	V0	2	**VBF0GE**	0.500	90x146x131
		25	11	V1	2	**VBF1GE**	0.500	90x146x131
		32	15	V2	2	**VBF2GE**	0.500	90x146x131
		50	22	V3	3	**VBF3GE**	0.930	157x180x152
		63	30	V4	3	**VBF4GE**	0.930	157x180x152
Black, long, padlockable with up to 3 padlocks (Ø 4 to Ø 8 shank)	Black 90 x 90	100	37	V5	1	**VBF5GEN**	2.190	241x291x190.5
		140	45	V6	1	**VBF6GEN**	2.190	241x291x190.5

(1) For characteristics of switch-disconnectors, please consult your Regional Sales Office.
(2) Number of add-on modules that can be attached.
(3) Enclosure not suitable in atmosphere contaminated with harsh substances (detergents, chlorine solvents, ketones, alcohol, aromatic hydrocarbons).
(4) Dimensions of standard versions, comprising (if any) handle, pushbutton, indicator light.
***Note:** For VCF and VBF enclosures from 02GE to 2GE, only one auxiliary contact block VZ7 or VZ20 can be mounted.*

Dimensions: page A1/38
Schemes: page A1/39

PB107201.eps

VC1GUN

PB107202.eps

VC3GUN

PB121472.eps

VC5GUN

Control + Disconnection (UL)

ON / Emergency Stop – IP65
Conforming UL508 CSA22.2 n° 14, IEC 60947-3, IEC 60204 (1)

Operator		Rating		Standard power ratings of UL motors			Incor-porated switch body	Possible attach-ments	Reference (2)	Weight	Overall dimensions (1) WxHxD
Handle	Front plate Dim.	IEC (Ith)	UL								
			600 V	240 V	480 V	600 V					
	mm	A	A	HP	HP	HP				kg	mm
Red, standard, padlockabl e with up to 3 padlocks (Ø 4 to Ø 8)	Yellow 60 x 60	32	20	5	10	10	V1	2	**VC1GUN**	0.500	121x164x132.1
		40	25	5	10	15	V2	2	**VC2GUN**	0.500	121x164x132.1
		63	45	10	20	30	V3	2	**VC3GUN**	0.930	164x193x132.1
		80	63	15	30	40	V4	2	**VC4GUN**	0.930	164x193x132.1
Red, long, padlockable with up to 3 padlocks (Ø 4 to Ø 8)	Yellow 90 x 90	125	100	25	50	50	V5	1	**VC5GUN**	2.190	241x291x190.5
		175	115	30	50	60	V6	1	**VC6GUN**	2.190	241x291x190.5

Additional modules for VZ switch bodies

Enclosed switches include a VZ switch body. Additional modules can be plugged on 1 or 2 sides of the switch body to provide additional contacts or extra connectivity.

580589.eps

VZ0
Main pole

580594.eps

VZ11
Neutral pole

580595.eps

VZ15
Earthing terminal

580596.eps

VZ20
Auxiliary contacts

Common modules for enclosed switch disconnectors – with exceptions (3)

Description	Rating	Reference
	A	
Main pole module (mounted in enclosure)	10	**VZ02** (not for VCxGUN starters)
	16	**VZ01** (not for VCxGUN starters)
	20	**VZ0** (not for VCxGUN starters)
	25	**VZ1**
	32	**VZ2**
	50	**VZ3**
	63	**VZ4**
Neutral pole modules with early make and late break contacts	10 to 32	**VZ11**
	50 and 63	**VZ12**
	100 and 140	**VZ13**
Earthing modules	10 to 32	**VZ14**
	50 and 63	**VZ15**
	100 and 140	**VZ16**
Description	**Type of contacts**	**Reference**
Auxiliary contact block modules with 2 auxiliary contacts	N/O + N/C (4)	**VZ7**
	N/O + N/O	**VZ20**

(1) For characteristics of switch-disconnectors, please consult your Regional Sales Office.
(2) Enclosure not suitable in atmosphere contaminated with harsh substances (detergents, chlorine solvents, ketones, alcohol, aromatic hydrocarbons).
(3) Not compatible with V●F5GEN, V●F6GEN, VC5GUN, VC6GUN, VCFN12GE, VCFN20GE.
(4) Late make N/O, early break N/C contacts.

Dimensions:
page A1/40

Schemes:
pages A1/39 and A1/40

Life Is On Schneider Electric

580597.eps
VZN11

580598.eps
VZN14

580599.eps
VZN05

Additional modules for switch bodies

Specific modules for VCFN12GE and VCFN20GE		
Description	**Rating**	**Reference**
	A	
Main pole modules	10	**VZN12**
	16	**VZN20**
Neutral pole module with early make and late break contacts	10 and 16	**VZN11**
Earthing module	10 and 16	**VZN14**
Description	**Type of contacts**	**Reference**
Auxiliary contact block modules	1 N/O late make contact	**VZN05**
	1 N/C early break contact	**VZN06**

PB121222.eps
VGP1

PB121224.eps
VGPCLIP1

Accessories for enclosed switch-disconnectors

Ground plate and accessories for VCF02GE, VCF01GE, VCF0GE, VCF1GE	
Metallic ground plate, for shielded cables connection. To be installed between back of enclosed switch-disconnectors, 2 fixing screws. Cable shield grounding ensured by 2 clamps, clamping from Ø11 to 14 mm	
For switch body	**Reference**
Ground plate + 2 clamps + 2 screws	**VGP1**
2 clamps + 2 screws	**VGPCLIP1**

Schemes:
page A1/39

Introduction & selection table

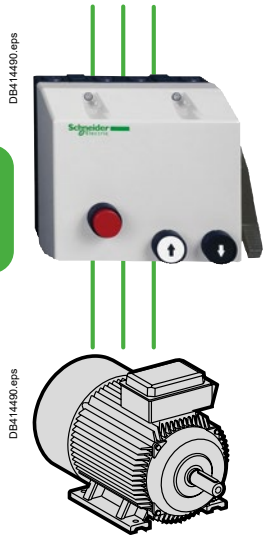

Range of pre-assembled motor starters, with pushbuttons, selectors, protection and control components in a robust casing

They can be fixed on a wall, on a panel, or on the chassis of a machine. They provide an operator with an easy access with visual simplicity

Numerous advantages to meet OEM's most common needs

- IEC
- Multiple ratings and sizes
- IP55, IP65
- IK08, IK09
- Totally or partially pre-wired

Standard starters

They are used to isolate a circuit, to protect and/or to control a motor

Customized protection

Enclosed starter offer is available in fully pre-equipped and pre-wired enclosures, also in partially pre-equipped enclosures to be completed with protective components of the required rating

Accessories

Additional accessories provide reinforced sealing, padlock locking, additional contacts...

Selection in 2 steps

1 Identify your need (1 line one or more) in the **Selection criteria** area (example: Load 5 kW – ON/OFF control with overload protection)

2 Choose your starter in the **Solutions** area by adding column contents, note the radical of the product references (example: LE1D + LRD)

Selection criteria							Solutions					
Load Power (kW) / 400V	Circuit isolation	Direct starter - ON/OFF	Reverser ON/REVERSE/OFF	Short circuit protection	Overload protection	Star - delta					Protection device to be added by customer *(of appropriate rating)*	See page
0.25..7.5		●			●		LE1M35				LRD	A1/7
4 … 30									LE1D			A1/8
0.02… 30		●		●				GV2PC GV3PC			GV2L	A1/9 + A1/10
0.02… 30								GV2PC GV3PC			GV2P	A1/9 + A1/10
0.06… 11		●		●	●			GV2MC GV3MP			GV2ME	A1/11
2.2 … 15										LE4K LE4D	LR2K LRD	A1/12
2.2 … 30			●		●				LE2K LE2D		LR2K LRD	A1/13
2.2 … 15			●	●	●					LE8K LE8D	LR2K LRD	A1/14
7.5...30		●			●	●			LE3D		LRD	A1/15
7.5...18.5		●	●	●	●	●				LE6D	LRD	A1/16

Life Is On Schneider Electric

LE1M35●●●●

Control + Protection against Overloads

- Direct Control: ON/OFF of 3-phase motor
- Motor protection: motor OFF in case of overload – manual reset with the red push button.
- Indication: yellow light activated with the contactor coil.
- The LE1M35 starter, combined with short-circuit protection components, provides type 1 or type 2 coordination, depending on the type of devices used.

Range:
- 10 IEC motor starters, for 3P motors from 0.25 to 7.5 kW (400V AC)
- Configurable push buttons: impulse or latched
- Conforming to IEC 60947-4-1 standard
- Degree of protection IP65 , according IEC 60529
- Ambient air temperature in operation -5 to +40°C
- Operating position: same as K series contactors
- Material: self extinguishing ABS.

Included (standard version):
- 1 contactor LC1K●● (1)
- 1 thermal overload relay LR2K (2)
- 1 green Start button “I”,
- 1 red Stop/Reset button “O/R”,
- 1 yellow operating indicator
- earth + neutral terminals at bottom of enclosure.

For supply voltages between 380 and 440 V (codes Q7, V7, N7 or R7) the control circuit is pre-wired between phases. For other supply voltages, the control circuit must be wired by the customer.

Direct-on-line starters

Standard power ratings of 3-phase motors 50-60 Hz in category AC-3				Setting range of thermal overload relay LR2K	Basic reference, to be completed by adding the voltage code (3) (4)	Overall dimensions (5) WxHxD
220 V 230 V	240 V	380 V 400 V	415 V			
kW	kW	kW	kW	A		mm
0.12	0.12	0.25	0.25	0.54…0.8	**LE1M35●●05**	78x160x108
0.18	0.18	0.37	0.37	0.8…1.2	**LE1M35●●06**	78x160x108
0.25	0.25	0.55	0.55	1.2…1.8	**LE1M35●●07**	78x160x108
0.37	0.37	1.1	0.75	1.8…2.6	**LE1M35●●08**	78x160x108
0.55	0.55	1.5	1.5	2.6…3.7	**LE1M35●●10**	78x160x108
1.1	0.75	2.2	2.2	3.7…5.5	**LE1M35●●12**	78x160x108
1.5	1.1	3	3	5.5…8	**LE1M35●●14**	78x160x108
2.2	2.2	4	4	8…11.5	**LE1M35●●16**	78x160x108
3	3	5.5	5.5	10…14	**LE1M35●●21**	78x160x108
3.7	4	7.5	7.5	12…16	**LE1M35●●22**	78x160x108
Replacement contactor					**LC1K●●A80**	-

Coil voltage codes

Volts ∼ 50/60 Hz	24	110	220	230	240	380	400	415	440
Code	B7	F7	M7	P7	U7	Q7	V7	N7	R7

(1) K contactor characteristic: refer to chapter B8.
(2) LR2K overload relay characteristics: refer to chapter B11.
(3) Remove the 2 last numbers if the thermal overload relay is not required. Example: LE1M35P7 instead of LE1M35P714.
(4) Please check the availability of your variant in the index page A1/34. The SEARCH function of your viewer can be used.
(5) Dimensions of standard versions, comprising (if any) handle, push button, indicator light.

Dimensions:
page A1/41

Schemes:
page A1/41

TeSys Control

Enclosed standard starters / DOL / to be completed with Deca [1] overload relay

Product references

PB112260_1.eps

LE1D●●

PB121670.tif

LRD●●

Control + Protection against Overloads

■ ON/OFF motor starters: 1-way rotation control of 3-phase motor, by green & red push buttons
■ Motor protection against overload: manual reset with the red push button or remotely.

Range:
■ 8 direct-on-line starters for 3P motors from 4 to 30 kW (9 to 65 A AC-3)
■ Choice of up to 12 AC coil voltages for control supply circuit (depending on starter rating).

Enclosures characteristics:
■ Conforming to IEC 60947-4-1 standard
■ Degree of protection according IEC 60529:
□ IP65,
□ IK07 for LED09…D35,
□ IK09 for LE1D40A…D65A
■ Ambient air temperature in operation -5 to +40°C
■ Operating position: same that as contactors
■ Material: LE1D09… D35 polycarbonate [2]
■ LE●D40A… D65A steel sheet.

Included:
■ 1 pre-wired LC1D contactor
■ 2 Harmony XB5 push buttons.
An LRD overload relay of the required rating must be ordered separately and wired at bottom of the contactor.

Direct on-line starters

Standard power ratings of 3-phase motors 50-60 Hz in category AC-3						Max. current Ith up to	Basic reference, to be completed by adding the voltage code [3]	Weight	Overall dimensions [4] WxHxD
220 V 230 V	380 V 400 V	415 V	440 V	500 V	660 V 690 V				
kW	kW	kW	kW	kW	kW	A		kg	mm
2.2	4	4	4	5.5	5.5	**9**	**LE1D09●●**	0.920	88x166x128.5
3	5.5	5.5	5.5	7.5	7.5	**12**	**LE1D12●●**	0.920	88x166x128.5
4	7.5	7.5	7.5	9	10	**17**	**LE1D18●●**	1.015	101x201x153.5
5.5	11	11	11	15	15	**22**	**LE1D25●●**	1.015	101x201x153.5
7.5	15	15	15	18.5	18.5	**26.5**	**LE1D35●●**	4.320	101x201x153.5
11	18.5	22	22	22	30	**40**	**LE1D40A●●**	4.820	200x300x158.5
15	22	25	30	30	33	**50**	**LE1D50A●●**	4.850	200x300x158.5
18.5	30	37	37	37	37	**65**	**LE1D65A●●**	4.850	200x300x158.5

Variants (pre-assembled)

Description	Available variants for starter	Suffix to be added to the starter reference [3]
No pushbuttons on cover	LE1D09…D65A●●	**A04**
1 blue Reset button “R”	LE1D09…D65A●●	**A05**
1 3-position stay put selector switch (“I”-“O”-“II”) (“I”: Automatic Start; “O”: Stop; “II”: Manual Start) 1 blue Reset button “R”	LE1D09…D25●●	**A09**
1 2-position stay put selector switch “O”-“I” (“O”: Stop; “I”: Manual Start) 1 blue Reset button “R”	LE1D09…D25●●	**A13**
Mounting of an LC1D09 contactor in an enclosure identical to LE1D18	LE1D09P7 LE1D09P7A13	**T**

Coil voltage codes [3]

Volts ∼ 50/60 Hz	24	48	110	115	120	220	230	240	380	400	415	440
LE1D09 to D35	B7	E7	F7	FE7	G7	M7	P7	U7	Q7	V7	N7	R7
LE1D40A to D65A	–	–	–	FE7	–	–	P7	–	Q7	–	–	–

(1) LRD overload relay selection: product reference page A1/33, more details in chapter B11.
(2) Avoid placing this material in contact with harsh substances (detergents, chlorine solvents ketones, alcohol, aromatic hydrocarbons).
(3) Please check the availability of your variant in the index page A1/34. The SEARCH function of your viewer can be used.
(4) Dimensions of standard versions, comprising (if any) handle, push button, indicator light.

Dimensions: page A1/46
Schemes: page A1/47

Life Is On Schneider Electric

PB124001.eps

GV2PC01

+

PB121671.eps

GV2L

PB124002.eps

GV3PC02

+

PB121678.eps

GV3L

Control + Isolation + Protection against Short circuits

2 solutions according to the required current rating.
GV2PC + GV2L > up to 23 A (Ithe)
GV3PC + GV3L > up to 55 A (Ithe)
The GV2L or GV3L circuit breaker of the required rating must be ordered separately.

- ■ Circuit isolation
- ■ ON/OFF motor starters: 1-way rotation control of 3-phase motor
- ■ Padlocking:
  - □ in ON or OFF position (GV2PC01, GV3PC01),
  - □ in OFF position (GV2PC02, GV3PC02).

Suitable circuit breakers:
- ■ GV2L - 12 ratings (3P motors from 0.09 to 11 kW - 400/415 V AC)
- ■ GV3L - 3 ratings (3P motors from 18.5 to 30 kW - 400/415 V AC).

Enclosures characteristics:
- ■ Conforming to IEC 60947-2
- ■ Degree of protection according IEC 60529:
  - □ IP65, IK08 (for GV2PC),
  - □ IK09 (for GV3PC)
- ■ Ambient air temperature in operation -5 to +40°C
- ■ Operational voltage (Ue): 690V
- ■ Material: GV2PC polycarbonate [2], GV3PC steel sheet.

Included:
- ■ GV rotary handle.

Enclosures fitted with padlockable rotary handle

Composition	Type	Reference	Overall dimensions [3] WxHxD
			mm
■ Insulating enclosure ■ Black handle, padlockable in ON/OFF position	Surface mounting For GV2L	**GV2PC01**	88x166x163
■ Insulating enclosure ■ Red handle on yellow background, padlockable in OFF position	Surface mounting For GV2L	**GV2PC02**	88x166x163
■ Metal enclosure ■ Black handle, padlocking in ON/OFF position ■ Circuit breaker/handle adapter	Surface mounting For GV3L	**GV3PC01**	200x300x200
■ Metal enclosure ■ Red handle, padlocking in OFF position ■ Circuit breaker/handle adapter	Surface mounting For GV3L	**GV3PC02**	200x300x200

GV2L, GV3L product references: add code to product reference [4]

Ithe (A)	**0.4**	**0.63**	**1**	**1.6**	**2.5**	**4**	**6.3**	**9**	**13**	**17**	**21**	**23**
GV2L codes	03	04	05	06	07	08	10	14	16	20	21	22
Ithe (A)	**35**	**41**	**55**									
GV3L codes	40	50	65									

(1) GV2, GV3 circuit breaker not included - characteristics: refer to chapter B6.
(2) Avoid placing this material in contact with harsh substances (detergents, chlorine solvents, ketones, alcohol, aromatic hydrocarbons).
(3) Dimensions of standard versions, comprising (if any) handle, push button, indicator light.
(4) Example: for Ithe 17 A, magnetic circuit breaker is GV2L20.

Dimensions:
page A1/43

Schemes:
page A1/43

PB124001.eps

GV2PC01

+

PB121672.eps

GV2P●●

PB124002.eps

GV3PC02

+

PB121680.eps

GV3P●●

Control + Isolation + Protection against Short circuits and Overloads

For OEM, 2 solutions according to the required current rating.
GV2PC + GV2P > up to 23 A (Ithe)
GV3PC + GV3P > up to 55 A (Ithe)The enclosure includes a rotary handle.
The GV2P or GV3P circuit breaker of the required rating must be ordered separately.

- Circuit isolation
- ON/OFF motor starters: 1-way rotation control of 3-phase motor
- Padlocking:
  - in ON or OFF position (GV2PC01, GV3PC01),
  - in OFF position (GV2PC02, GV3PC02).

Suitable circuit breakers:
- GV2P - 14 ratings (3P motors from 0.06 to 11 kW - 400/415 V AC)
- GV3P - 2 ratings (3P motors from 18.5 to 30 kW - 400/415 V AC).

Enclosures characteristics:
- Conforming to IEC 60947-2
- Degree of protection according IEC 60529: IP65, IK08 (for GV2PC), IK09 (for GV3PC)
- Ambient air temperature in operation -5 to +40°C
- Operational voltage (Ue) 690V
- Material: GV2PC polycarbonate [2], GV3PC steel sheet.

Included:
- GV rotary handle.

Enclosures fitted with padlockable rotary handle

Composition	Type	Reference	Overall dimensions [3] WxHxD
			mm
■ Insulating enclosure ■ Black handle, padlockable in ON/OFF position	Surface mounting For GV2L	**GV2PC01**	88x166x163
■ Insulating enclosure ■ Red handle on yellow background, padlockable in OFF position	Surface mounting For GV2L	**GV2PC02**	88x166x163
■ Metal enclosure ■ Black handle, padlocking in ON/OFF position ■ Circuit breaker/handle adapter	Surface mounting For GV3L	**GV3PC01**	200x300x200
■ Metal enclosure ■ Red handle, padlocking in OFF position ■ Circuit breaker/handle adapter	Surface mounting For GV3L	**GV3PC02**	200x300x200

GV2P, GV3P product references: add code to product reference [4]

Ithe (A)	**0.16**	**0.25**	**0.4**	**0.63**	**1**	**1.6**	**2.5**	**4**	**6.3**	**9**	**13**	**17**	**21**	**23**
GV2P codes	01	02	03	04	05	06	07	08	10	14	16	20	21	22
Ithe (A)	**35**	**41**	**55**											
GV3P codes	40	50	65											

(1) GV2, GV3 circuit breaker not included - characteristics: refer to chapter B6.
(2) Avoid placing this material in contact with harsh substances (detergents, chlorine solvents, ketones, alcohol, aromatic hydrocarbons).
(3) Dimensions of standard versions, comprising (if any) handle, pushbutton, indicator light.
(4) Example: for Ithe 17 A, magnetic circuit breaker is GV2P20.

Dimensions:
page A1/43

Schemes:
page A1/43

Life Is On Schneider Electric

PB121459.eps

GV2MC02, GV2MC03

PB121673.tif

GV2ME●●

PB112216.eps

GV2MP01, GV2MP02

PB121673.tif

GV2ME●●

Control + Isolation + Protection against Short circuits and Overloads

For OEM, 2 solutions, according to the enclosure installation mode:
GV2MC surface mounting enclosure for GV2ME circuit breaker
GV2MP flush mounting enclosure for GV2ME circuit breaker.
The GV2ME circuit breaker of the required rating must be ordered separately.

- Circuit isolation
- ON/OFF motor starters: 1-way rotation control of 3-phase motor
- Short-circuit and adjustable overload protection
- Padlocking in OFF position.

Suitable circuit breakers:
- GV2ME - 14 ratings (3P motors from 0.06 to 11 kW - 400/415 V AC).

Enclosures characteristics:
- Conforming to IEC 60947-2; IEC 60947-4-1
- Degree of protection according IEC 60529: refer to selection chart
- Operational voltage (Ue) 690 V
- Material: polycarbonate [2].

Included:
- GV2E01 or GV2E02 sealing kit (fixed on the front plate).

Enclosures for thermal-magnetic circuit breakers GV2ME

Type	Degree of protection	Possible no. of side mounting auxiliary contact blocks on GV2ME		Reference	Weight	Overall dimensions [3] WxHxD
		LH side	RH side		kg	mm
Surface mounting, double insulated with protective conductor. Sealable cover	IP41	1	1	**GV2MC01**	0.290	93x147x84
	IP55	1	1	**GV2MC02**	0.300	93x147x84
				or **GV2MCK04** [4]	0.420	93x147x145.5
	IP55 for temperature < +5 °C	1	1	**GV2MC03**	0.300	93x147x84
Flush mounting, with protective conductor	IP41 (front face)	1	1	**GV2MP01**	0.115	106.5x140x83
	IP41 (front face reduced flush mounting)	–	1	**GV2MP03**	0.115	106.5x140x98
	IP55 (front face)	1	1	**GV2MP02**	0.130	106.5x140x83
	IP55 (front face reduced flush mounting)	–	1	**GV2MP04**	0.130	106.5x140x98

GV2ME product references: add code to product reference [5]

Ithe (A)	0.16	0.25	0.4	0.63	1	1.6	2.5	4	6.3	9	13	17	21	23
GV2ME codes	01	02	03	04	05	06	07	08	10	14	16	20	21	22

GV2MC, GV2MP enclosures with complementary circuit breaker and mushroom head pushbutton allow the construction of safety direct-on-line starters conforming INRS and VDE0113.
Surface and flush mounting enclosures, mushroom heads, circuit breakers and undervoltage release cover a large number of applications.

*(1) Characteristics of **GV2ME** circuit breakers and additives: refer to page A1/32.*
(2) Enclosure not suitable in atmosphere contaminated with harsh substances (detergents, chlorine solvents, ketones, alcohol, aromatic hydrocarbons).
(3) Dimensions of standard versions, comprising (if any) handle, pushbutton, indicator light
*(4) Enclosure **GV2MCK04** is fitted with a **GV2K04** mushroom head Emergency stop pushbutton as standard.*
*(5) Example: for Ithe 17 A, magnetic circuit breaker is **GV2ME20.***

Dimensions:
page A1/44

Schemes:
page A1/45

TeSys Control

Enclosed standard starters / DOL / to be completed with LR2K, Deca [1] overload relays

Product references

PB121460.eps

LE4K●●●●

+

PB123794.tif

LR2K●●

PB121463.eps

LE4D●●●●

+

PB121670.tif

LRD●●

Control + Isolation + Protection against Short circuits and Overloads

■ ON/OFF motor starters: 1-way rotation control of 3-phase motor, by green & red pushbuttons
Option: no pushbutton on cover
■ Circuit disconnection by side black handle
■ Protection against short circuits by NFC fuses type aM (to be ordered separately)
■ Motor protection against overload – manual reset with the red pushbutton or remotely. Option: cover with just a "Reset" blue pushbutton.
An LR2K or LRD overload relay of the required rating must be ordered separately and wired at bottom of the contactor [1].

Ranges:
■ 8 partially pre-equipped enclosures to build-up 3P motor starters from 2.2 to 15 kW (6 to 35 A AC-3)
■ Choice of 5 coils for LE4K●●, 12 coils for LE4D●●, for control with different AC voltages.

Enclosures characteristics:
■ Conforming to IEC 60947-4-1 standard
■ Degree of protection according IEC 60529:
□ IP65, IK09 for LE4KIP65,
□ IK07 for LE4D,
■ Ambient air temperature in operation -5 to +40°C
■ Operating position: same that as contactors
■ Material: LE4K and LE4D polycarbonate [2].

Included:
■ 1 fuse carrier with external side handle
■ 1 pre-wired LC1K or LC1D contactor
■ 2 Harmony XB5 pushbuttons.

Direct-on-line starters

Standard power ratings of 3-phase motors 50-60 Hz in category AC-3						Max. current Ith up to	Fuses to be fitted by the customer		Basic reference, to be completed by adding the voltage code [3] [4]	Weight	Overall dimensions [5] WxHxD
220 V 230 V	380 V 400 V	415 V	440 V	500 V	660 V 690 V		Size	Type aM			
kW	kW	kW	kW	kW	kW	A		A		kg	mm
1.5	2.2	2.2	3	–	–	**6**	10 x 38	10	**LE4K065●●**	1.450	206x165x146
2.2	4	4	4	–	–	**9**	10 x 38	12	**LE4K095●●**	1.450	206x165x146
								or	**LE4D09●●** [6]	1.960	217x348x175.5
2.2	4	4	4	5.5	–	**9**	10 x 38	12	**LE4D09●●**	1.960	217x348x175.5
3	5.5	5.5	5.5	7.5	–	**12**	10 x 38	16	**LE4D12●●**	1.960	217x348x175.5
4	7.5	9	9	10	–	**18**	10 x 38	20	**LE4D18●●**	2.200	217x348x175.5
5.5	11	11	11	15	–	**25**	10 x 38	25	**LE4D25●●**	2.200	217x348x175.5
7.5	15	15	15	18.5	18.5	**26.5**	14 x 51	32	**LE4D35●●**	5.190	217x348x175.5

Voltages code [4]												
Volts ∼ 50/60 Hz	24	48	110	115	120	220	230	240	380	400	415	440
LE4D	B7	E7	F7	FE7	G7	M7	P7	U7	Q7	V7	N7	R7
LE4K	–	–	–	–	–	M7	P7	U7	Q7	V7	–	–

Supply voltages between 380 and 440 V (codes Q7, V7, N7 or R7): pre-wired control circuit between phases.
Other supply voltages: control circuit must be wired by the customer.

(1) LR2K, LRD overload relay selection: product references page A1/33, more details in chapter B11.
(2) Avoid placing this material in contact with harsh substances (detergents, chlorine solvents, ketones, alcohol, aromatic hydrocarbons.
(3) LE4D●●● (with P7 and V7 coil) with no pushbutton on cover: add "A04" to product reference (example: LE4D25V7A04).
LE4D●●● (with P7 and V7 coil) with overload "Reset" blue pushbutton only on cover: > add "A05" to full product reference.
(4) Please check the availability of your variant in the index page A1/34. The SEARCH function of your viewer can be used.
(5) Dimensions of standard versions, comprising (if any) handle, pushbutton, indicator light.
(6) Selection according to dimensions and the number of operating cycles, please consult your Regional Sales Office.

Dimensions: page A1/48
Schemes: page A1/49

PB121465.eps

LE2K09●●●

+

PB123794.tif

LR2K●●

PB112274.eps

LE2D12●●●

+

PB121670.tif

LRD●●

Reverse Control + Isolation + Protection against Overloads

■ ON/REVERSE/OFF motor starters: 2-way rotation control of 3-phase motor
□ by black I-II position spring return selector, red STOP/RESET pushbuttons for LE2K●● starters
□ by black ON ↑ , ON ↓ pushbuttons, red STOP/RESET pushbutton for LE2D●● starters
■ Motor protection against overload: manual reset with the red pushbutton or remotely.
An LR2K or LRD overload relay of the required rating must be ordered separately and wired at bottom of the contactor.

Ranges:
■ for 3P motors from 4 to 30 kW (9 to 65 A AC-3), in 11 ranges of reverser starters
■ Choice of up to 7 AC coils voltages (depending on starter) for control supply circuit.

Enclosures characteristics:
■ Conforming to IEC 60947-4-1 standard
■ Degree of protection according IEC 60529: IP65, IK07 for LED09●●●D35, IK09 for LE2K and LE●D40A●●●D65A,
■ Ambient air temperature in operation -5 to +40°C
■ Operating position: same that as contactors
■ Material: LE2K and LE●D09●●●D35 polycarbonate [2]
■ LE●D40A●●● D65A steel sheet.

Included:
■ 2 pre-wired LC1K or LC1D contactor
■ 3 Harmony XB5 pushbuttons - or -1 Harmony XB5 pushbutton + 1 Harmony XB5 switch.

Reversing starters

Standard power ratings of 3-phase motors 50-60 Hz in category AC-3						Maximum current Ith up to	Basic reference, to be completed by adding the voltage code [3]	Weight	Overall dimensions [4] WxHxD
220 V 230 V	380 V 400 V	415 V	440 V	500 V	660 V 690 V				
kW	kW	kW	kW	kW	kW	A		kg	
1.5	2.2	2.2	3	–	–	**6**	**LE2K065●●**	1.080	175x165x146
2.2	4	4	4	–	–	**9**	**LE2K095●●**	1.080	175x165x146
							LE2D09●● [5]	2.100	101x201x153.5
–	–	–	–	5.5	5.5	**9**	**LE2D09●●**	2.100	101x201x153.5
3	5.5	5.5	5.5	7.5	7.5	**12**	**LE2D12●●**	2.100	101x201x153.5
4	7.5	7.5	7.5	9	10	**17**	**LE2D18●●**	2.410	101x201x153.5
5.5	11	11	11	15	15	**22**	**LE2D25●●**	2.570	101x201x153.5
7.5	15	15	15	18.5	18.5	**26.5**	**LE2D35●●**	4.100	101x201x153.5
11	18.5	22	22	22	30	**40**	**LE2D40A●●**	5.270	200x300x174
15	22	25	30	30	33	**50**	**LE2D50A●●**	5.470	200x300x174
18.5	30	37	37	37	37	**65**	**LE2D65A●●**	5.470	200x300x174

Coil voltage codes [3]

Volts ∼ 50/60 Hz	24	48	110	115	120	220	230	240	380	400	415	440
LE2D40A to D65A	–	–	–	FE7	–	–	P7	–	Q7	–	–	–
LE2D09 to D35	B7	–	–	–	–	M7	P7	U7	Q7	V7	N7	–
LE2K	–	–	–	–	–	M7	P7	U7	Q7	V7	–	–

(1) LR2K, LRD overload relay selection: product references page A1/33, more details in chapter B11.
(2) Avoid placing this material in contact with harsh substances (detergents, chlorine solvents, ketones, alcohol, aromatic hydrocarbons.
(3) Please check the availability of your variant in the index page A1/34. The SEARCH function of your viewer can be used.
(4) Dimensions of standard versions, comprising (if any) handle, pushbutton, indicator light.
(5) Selection according to dimensions and the number of operating cycles, please consult your Regional Sales Office.

Dimensions: page A1/46
Schemes: page A1/47

PB121466.eps

LE8K●●●●

+

PB123794.tif

LR2K●●

PB112301.eps

LE8D●●●●

+

PB121670.tif

LRD●●

Reverse Control + Isolation + Protection against Short circuits and Overloads

■ ON/REVERSE/OFF motor starters: 2-way rotation control of 3-phase motor
□ LE8K●●starters, by white ↑, black ↓, red Stop/Reset pushbuttons
□ LE8D●● starters, by black I-II position spring return selector, red Stop/Reset pushbutton
□ Option: no pushbutton on cover
■ Circuit disconnection by side black handle
■ Protection against short circuits by NFC fuses type aM (to be ordered separately)
■ Motor protection against overload: manual reset with the red pushbutton or remotely. LE8D option: cover with just a "Reset" blue pushbutton.
An LR2K or LRD overload relay of the required rating must be ordered separately and wired at bottom of a the contactor.

Ranges:
■ 8 partially pre-equipped enclosures to build-up 3P motor reversers from 2.2 to 15 kW (6 to 35 A AC-3)
■ Choice of 3 coils for control with different AC voltages.

Enclosures characteristics:
■ Conforming to IEC 60947-4-1 standard
■ Degree of protection according IEC 60529: IP65, IK09 for LE8KIP65, IK07 for LE8D
■ Ambient air temperature in operation -5 to +40°C
■ Operating position: same that as contactors
■ Material: LE8K and LE8D09●●●D35 polycarbonate [2].

Included:
■ 1 fuse carrier with external side handle
■ 2 pre-wired LC1K or LC1D contactors
■ 3 Harmony XB5 pushbuttons - or -1 Harmony XB5 pushbutton + 1 Harmony XB5 switch.

Reversing starters

Standard power ratings of 3-phase motors 50-60 Hz in category AC-3						Maximum current Ith up to	Fuses to be fitted by the customer		Basic reference, to be completed by adding the voltage code [3] [4]	Weight	Overall dimensions [5] WxHxD
220 V 230 V	380 V 400 V	415 V	440 V	500 V	660 V 690 V		Size	Type aM			
kW	kW	kW	kW	kW	kW	A		A		kg	
1.5	2.2	2.2	3	–	–	**6**	10 x 38	10	**LE8K065●●**	1.600	206x165x146
2.2	4	4	4	–	–	**9**	10 x 38	12	**LE8D09●●** [6]	3.550	217x348x182
–	–	–	–	5.5	–	**9**	10 x 38	12	**LE8D09●●**	3.550	217x348x182
3	5.5	5.5	5.5	7.5	–	**12**	10 x 38	16	**LE8D12●●**	3.550	217x348x182
4	7.5	9	9	10	–	**17**	10 x 38	20	**LE8D18●●**	3.700	217x348x182
5.5	11	–	–	–	–	**22**	10 x 38	25	**LE8D25●●**	4.670	217x348x182
7.5	15	15	15	18.5	18.5	**26.5**	14 x 51	32	**LE8D35●●**	5.800	217x348x182

Voltage codes [4]												
Volts ∼ 50/60 Hz	**24**	**48**	**110**	**115**	**120**	**220**	**230**	**240**	**380**	**400**	**415**	**440**
LE8 K, LE8 D	–	–	–	–	–	–	P7	–	Q7	V7	–	–

(1) LR2K, LRD overload relay selection: product references page A1/33, more details in chapter B11.
(2) Avoid placing this material in contact with harsh substances (detergents, chlorine solvents, ketones, alcohol, aromatic hydrocarbons.
(3) LE8K●●●●●, LE8D●●●● (with P7 and V7 coil) with no pushbutton on cover: add "A04" to product reference (example: LE8K065P7A04, LE8D25V7A04) LE4D●●●● (with P7 and V7 coil) with only one pushbutton on cover: overload "Reset" blue pushbutton > add "A05"to full product reference.
(4) Please check the availability of your variant in the index page A1/34. The SEARCH function of your viewer can be used.
(5) Dimensions of standard versions, comprising (if any) handle, pushbutton, indicator light.
(6) Selection according to dimensions and the number of operating cycles, please consult your Regional Sales Office.

Dimensions: page A1/48
Schemes: page A1/49

Life Is On Schneider Electric

105552_SE.eps

LE3D

+

PB121670.tif

LRD●●

Star-delta Control + Protection against Overload

■ Star-delta starting of 3-phase motor: ON by green pushbutton, OFF by red pushbutton. Option: no pushbutton on cover
□ Maximum operating rate: 30 starts/hour.
□ Maximum starting time: 30 seconds.
□ Delay of 40 ms ±15 ms at changeover by LADS2 timer on delta contactor to provide sufficient time for star contactor to break.
■ Motor protection against overload: manual reset with the red pushbutton or remotely.
An LRD overload relay of the required rating must be ordered separately and wired at bottom of the contactor.

Range:
■ 4 partially pre-equipped enclosures to build-up 3P motor starters from 7.5 to 30 kW. Choice of 7 coils for control with different AC voltages.

Enclosures characteristics:
■ Conforming to IEC 60947-4-1 standard
■ Degree of protection according IEC 60529: IP65, IK07
■ Ambient air temperature in operation -5 to +40°C
■ Operating position: same that as contactors
■ Material: polycarbonate [2].

Included:
■ 3 pre-wired LC1D contactors
■ 2 Harmony XB5 pushbuttons.

Star-delta starters

Standard power ratings of squirrel cage motors Mains voltage - delta connection				Basic reference, to be completed by adding the voltage code [3] [4]	Weight	Overall dimensions [5] WxHxD
220 V	380/400 V	415 V	440 V			
kW	kW	kW	kW		kg	
4	7.5	7.5	7.5	**LE3D09●●**	3.650	186x348x175.5
5.5	11	11	11	**LE3D12●●**	3.650	186x348x175.5
11	18.5	22	22	**LE3D18●●**	3.750	186x348x175.5
11	22	26	26	**LE3D35●●**	5.160	186x348x175.5

Voltage codes [4]							
Volts ∼ 50/60 Hz	**24**	**220**	**230**	**240**	**380**	**400**	**415**
LE3 D	B7	M7	P7	U7	Q7	V7	N7

(1) LRD overload relay selection: product references page A1/33, more details in chapter B11 - Select appropriate overload relay for setting at 0.58 of the full load rated motor current.
(2) Avoid placing this material in contact with harsh substances (detergents, chlorine solvents, ketones, alcohol, aromatic hydrocarbons).
*(3) LE3D●●●● (with P7 and V7 coil) with no pushbutton on cover: add "**A04**"to product reference (example: LE3D18P7A04).*
(4) Please check the availability of your variant in the index page A1/34. The SEARCH function of your viewer can be used.
(5) Dimensions of standard versions, comprising (if any) handle, pushbutton, indicator light.

Dimensions:
page A1/50

Schemes:
page A1/50

PB121469.eps

LE6D●●●●

+

PB121670.tif

LRD●●

Star-delta Control + Disconnection + Protection against Short circuits and Overloads

■ Star-delta starting of 3-phase motor: ON by green pushbutton, OFF by red pushbutton. Options: no pushbutton, “Reset” pushbutton only
□ Maximum operating rate: 30 starts/hour.
□ Maximum starting time: 30 seconds.
□ Delay of 40 ms ±15 ms at changeover by LADS2 timer on delta contactor to provide sufficient time for star contactor to break.
■ Circuit disconnection by side black handle
■ Protection against short circuits by NFC fuses type aM (to be ordered separately)
■ Motor protection against overload: manual reset with the red pushbutton or remotely.
An LRD overload relay of the required rating must be ordered separately and wired at bottom of the contactor.

Range:
■ 4 partially pre-equipped enclosures to build-up 3P motor starters from 7.5 to 30 kW choice of 7 coils for control with different AC voltages.

Enclosures characteristics:
■ Conforming to IEC 60947-4-1 standard
■ Degree of protection according IEC 60529: IP65, IK07
■ Ambient air temperature in operation -5 to +40°C
■ Operating position: same that as contactors
■ Material: polycarbonate [2].

Included:
■ 1 fuse carrier with external side handle
■ 3 pre-wired LC1D contactors
■ 2 Harmony XB5 pushbuttons.

Star-delta starters

Standard power ratings of squirrel cage motors Mains voltage - delta connection				Fuses to be fitted by the customer		Basic reference, to be completed by adding the voltage code [3]	Weight	Overall dimensions [4] WxHxD
220 V	380/400 V	415 V	440 V	Size	Type aM			
kW	kW	kW	kW				kg	
4	7.5	7.5	7.5	10 x 38	20	**LE6D09●●**	3.900	217x348x175.5
5.5	11	11	11	10 x 38	25	**LE6D12●●**	3.900	217x348x175.5
11	18.5	22	22	14 x 51	40	**LE6D18●●**	4.850	217x348x175.5

Voltage codes			
Volts ∼ 50/60 Hz	**24**	**230**	**400**
LE6 D	B7	P7	V7

(1) LRD overload relay selection: product references page A1/33, more details in chapter B11 - Select appropriate overload relay for setting at 0.58 of the full load rated motor current.
(2) Avoid placing this material in contact with harsh substances (detergents, chlorine solvents, ketones, alcohol, aromatic hydrocarbons).
(3) Please check the availability of your variant in the index page A1/34. The SEARCH function of your viewer can be used.
(4) Dimensions of standard versions, comprising (if any) handle, pushbutton, indicator light.

Dimensions:
page A1/42

Schemes:
page A1/42

Life Is On Schneider Electric

Introduction & selection table

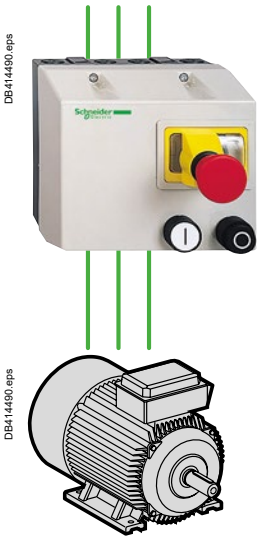

Range of pre-assembled safety motor starters, with mushroom pushbuttons, protection and control components in a robust casing

They can be fixed on a wall, on a panel, or on the chassis of a machine. They provide the operator with safety machine controls complying with IEC 60204-1.

With numerous advantages to meet OEM's most common needs

- IEC
- Multiple ratings and sizes
- IP55
- IK07
- Pre-wired

Safety starters

They provide similar functions as standard starters but also include emergency stops to comply with IEC 60204-1 machine safety standards.

Selection in 2 steps

1 Identify your need (on a single line) in the **Selection criteria** area (example: Load 5 kW – Visible circuit isolation, ON/OFF control with short circuit / overload protection)

2 Choose your **Solutions** by adding column contents, note the radical of the product references (example: LG1D)

Selection criteria							Solutions						
Load Power (kW) / 400 V supply	Direct starter ON/OFF	Reverser ON/REVERSE/OFF	Short circuit / overload protection	Power circuit isolation	Visible isolation by rotary switch	Isolated control circuit by transformer							See page
0.06...4	●		●	●			LG7K						A1/18
4 … 9							LG7D						A1/18
0.06… 4	●		●	●	●			LG1K					A1/19
4… 9								LG1D					A1/19
0.06… 4	●		●	●		●			LJ7K				A1/20
0.06… 5.5		●	●	●						LG8K			A1/21
0.06 … 4		●	●	●		●					LJ8K		A1/22
0.06 … 15	●		●	●								GV2MCK04 GV2ME GV2AX	A1/23

PB121470.eps

LG7K06

PB111886.eps

LG7K09, LG7D●●

For Control + Isolation + Short circuit / Overload Protection

Enclosed safety motor starters complying with IEC 60204-1 “Safety of machinery” standards.

- ON/OFF motor starters: 1-way rotation control of 3-phase motor
- Emergency stop
- Electrical circuit isolation, lockable (from LG7K09) with up to 3 padlocks
- Short circuit protection
- Overload protection
- Undervoltage protection (LG7K06: with additional undervoltage release module).

Switching back on power supply after tripping must be a deliberate action.

Range:
- 12 pre-equipped enclosed safety starters from 0.06 to 9 kW.

Enclosures characteristics:
- Conforming to IEC 60947-1, IEC 60204-1
- Degree of protection according IEC 60529: IP55, IK07
- Ambient air temperature in operation -5 to +40°C
- Operational voltage (Ue) 690 V
- Operating position: same that as contactors
- Material: polycarbonate (1).

Included:
- 1 GV2ME thermal magnetic circuit breaker (with mushroom emergency stop with LG7K06) (2)
- 1 LC1K or LC1D pre-wired contactor
- 1 Harmony emergency stop pushbutton (from LG7K09)
- 2 Harmony XB5 pushbuttons.
- 1 GVAX undervoltage release module (from LG7K09).

Additional GVAX●● undervoltage release module for LG7K06 – to be ordered separately.
Additional GV2SN●● Indicator light – to be ordered separately.

Non-reversing starters (with pushbutton control of isolation)

Standard power ratings of 3-phase motors 50-60 Hz in category AC-3			Circuit breaker Setting range of thermal trips	Dust & damp protected starter Basic reference, to be completed by adding the voltage code (3)	Weight	Overall dimensions (4) WxHxD
220/ 230 V	400/ 415 V	440 V				
kW	kW	kW	A		kg	
–	0.06	0.06	0.16…0.25	**LG7K06●●02**	1.300	175x165x177
0.06	0.09	0.12	0.25…0.40	**LG7K06●●03**	1.300	175x165x177
–	0.18	0.18	0.40…0.63	**LG7K06●●04**	1.300	175x165x177
0.12	0.25	0.37	0.63…1	**LG7K06●●05**	1.300	175x165x177
0.25	0.55	0.55	1…1.6	**LG7K06●●06**	1.300	175x165x177
0.37	0.75	1.1	1.6…2.5	**LG7K06●●07**	1.300	175x165x177
0.75	1.5	1.5	2.5…4	**LG7K06●●08**	1.300	175x165x177
1.1	2.2	3	4…6.3	**LG7K06●●10**	1.300	175x165x177
1.5	4	4	6…10	**LG7K09●●14**	1.450	175x165x177
3	5.5	5.5	9…14	**LG7D12●●16**	1.600	175x165x177
4	7.5	9	13…18	**LG7D18●●20**	1.630	175x165x177
4	9	9	17…23	**LG7D18●●21**	1.630	175x165x177

Voltage codes (3)

Volts ∼ 50/60 Hz	24	220/ 230	230	380/ 400	400	400/415 for LG7K)
LG7K, LG7D	B7	M7	P7	Q7	V7	N7

(1) Avoid placing this material in contact with harsh substances (detergents, chlorine solvents, ketones, alcohol, aromatic hydrocarbons).
*(2) **LG7K09, D12, D18:** the Emergency Stop function is performed by an undervoltage trip module acting on the circuit breaker. This circuit breaker is always pre-wired for use on 380/400/415 V 50 Hz supply.*
For a 60 Hz supply, please consult your Regional Sales Office.
(3) Please check the availability of your variant in the index page A1/34. The SEARCH function of your viewer can be used.
(4) Dimensions of standard versions, comprising (if any) handle, pushbutton, indicator light.

Dimensions:
page A1/52

Schemes:
page A1/53

Life Is On Schneider Electric

PB111834.eps

LG1K065

For Control + Visible Isolation + Short circuit / Overload Protection

Enclosed safety motor starters complying with IEC 60204-1 “Safety of machinery” standards.

- ON/OFF motor starters: 1-way rotation control of 3-phase motor
- Emergency stop
- Electrical circuit isolation, lockable with up to 3 padlocks
- Short circuit protection
- Overload protection
- Undervoltage protection (with additional undervoltage release module).

Switching back on power supply after tripping must be a deliberate action.

Range:
- 12 pre-equipped enclosed safety starters from 0.06 to 9 kW.

Enclosures characteristics:
- Conforming to IEC 60947-1, IEC 60204-1
- Degree of protection according IEC 60529 : IP55, IK07
- Ambient air temperature in operation -5 to + 40°C
- Operational voltage (Ue) 690 V
- Operating position: same that as contactors
- Material: polycarbonate (1)
- Enclosure cannot be opened when energized in position “I”.

Included:
- 1 GV2ME thermal magnetic circuit breaker
- 1 LC1K (LG1K starters) or LC1D (LG1D starters) pre-wired contactor
- Switch with rotary red/yellow handle for isolation and emergency
- 2 Harmony XB5 pushbuttons.

Additional GVAX●● undervoltage release module – to be ordered separately.
Additional GV2SN●● indicator light – to be ordered separately.

Non-reversing starters (with rotary operator for control of isolation)
Enclosure cannot be opened when energised in position “I”.

Standard power ratings of 3-phase motors 50-60 Hz in category AC-3			Circuit breaker Setting range of thermal trips	Dust & damp protected starter Basic reference, to be completed by adding the voltage code (2)	Weight	Overall dimensions (3) WxHxD
220/ 230 V	400/ 415 V	440 V				
kW	kW	kW	A		kg	
–	0.06	0.06	0.16…0.25	**LG1K065●●02**	0.970	175x165x165
0.06	0.09	0.12	0.25…0.40	**LG1K065●●03**	0.970	175x165x165
–	0.18	0.18	0.40…0.63	**LG1K065●●04**	0.970	175x165x165
0.12	0.25	0.25	0.63…1	**LG1K065●●05**	0.970	175x165x165
0.25	0.55	0.55	1…1.6	**LG1K065●●06**	0.970	175x165x165
0.37	0.75	1.1	1.6…2.5	**LG1K065●●07**	0.970	175x165x165
0.75	1.5	1.5	2.5…4	**LG1K065●●08**	0.970	175x165x165
1.1	2.2	3	4…6.3	**LG1K065●●10**	0.970	175x165x165
1.5	4	4	6…10	**LG1K095●●14**	1.120	175x165x165
3	5.5	5.5	9…14	**LG1D122●●16**	1.270	175x165x165
4	7.5	9	13…18	**LG1D182●●20**	1.290	175x165x165
4	9	9	17…23	**LG1D182●●21**	1.290	175x165x165

Voltage codes (2)

Volts ∼ 50/60 Hz	220/ 230	230	380/ 400	400	400/415 (for LG1K)
LG1K, LG1D	M7	P7	Q7	V7	N7

(1) Avoid placing this material in contact with harsh substances (detergents, chlorine solvents, ketones, alcohol, aromatic hydrocarbons).
(2) Please check the availability of your variant in the index page A1/34. The SEARCH function of your viewer can be used.
(3) Dimensions of standard versions, comprising (if any) handle, pushbutton, indicator light.

Dimensions:
page A1/52

Schemes:
page A1/53

PB111880.eps

LJ7K06

For Control + Isolation + Short circuit / Overload Protection, with isolated 24 V control circuit

Enclosed safety motor starters complying with IEC 60204-1 “Safety of machinery” standards.

- ON/OFF motor starters: 1-way rotation control of 3-phase motor
- Emergency stop [1]
- Electrical circuit isolation, lockable on LJ7K09 with up to 3 padlocks
- Short circuit protection
- Overload protection
- Protection against voltage drops for LJ7K09● For LJ7K06, a GVAX●● undervoltage trip may be added
- Possible signaling with GV2SN●● indicator (to be ordered separately).

Switching back on power supply after tripping must be a deliberate action.

Range:
- 9 pre-equipped enclosed safety starters from 0.06 to 4 kW.

Enclosures characteristics:
- Conforming to IEC 60947-1, IEC 60204-1
- Degree of protection according IEC 60529: IP55, IK07
- Ambient air temperature in operation -5 to +40°C
- Operational voltage (Ue) 690 V
- Operating position: same that as contactors
- Material: polycarbonate [2].

Included:
- 1 GV2ME thermal magnetic circuit breaker with mushroom emergency stop (release on ¼ turn),
- 1 LC1K pre-wired contactor
- 2 Harmony XB5 pushbuttons
- 1 Integral transformer: 400/24 V, 25 VA
- 1 GVAX undervoltage release module (with LJ7K09).

Additional GVAX●● undervoltage release module for LJ7K06 - to be ordered separately.
Additional GV2SN●● indicator light – to be ordered separately.
- Terminal allowing the connection of a volt-free contact, if required, in the control circuit.

Non-reversing motor starters with integral transformer, pre-wired for operation on a 3-phase 380 to 400 V 50 Hz supply (with pushbutton control of isolator function)

Standard power ratings of 3-phase motors 50 Hz in category AC-3	Circuit breaker	Dust and damp protected starter	Weight	Overall dimensions [5] WxHxD
380/400 V	Setting range of thermal trips	Reference [3] [4]		
kW	A		kg	
0.06	0.16…0.25	**LJ7K06Q702**	2.270	175x165x177
0.09	0.25…0.40	**LJ7K06Q703**	2.270	175x165x177
0.25	0.63…1	**LJ7K06Q705**	2.270	175x165x177
0.55	1…1.6	**LJ7K06Q706**	2.270	175x165x177
0.75	1.6…2.5	**LJ7K06Q707**	2.270	175x165x177
1.5	2.5…4	**LJ7K06Q708**	2.270	175x165x177
2.2	4…6.3	**LJ7K06Q710**	2.270	175x165x177
4	6…10	**LJ7K09Q714**	2.270	175x165x146

Variants (pre-assembled) [4]

Description	Variants available for starter	Suffix to be added to the starter reference [6]
With Emergency Stop No control pushbuttons	LJ7K06Q705...K09Q714	**A04**
With padlocking facility (fitted as standard on LJ7 K09)	LJ7K06Q705...K06Q710	**A29**
Without circuit breaker [8] (or undervoltage release voltage)	LJ7	[7]
Without circuit breaker [8] With Emergency Stop No control pushbuttons	LJ7K09Q7	**A04**
Without circuit breaker [8] Without Emergency Stop (if the emergency stop is on the machine)	LJ7K09Q7	**A39**
Without circuit breaker [8] Without Emergency Stop No control pushbuttons	LJ7K09Q7	**A04A39**

(1) LJ7K06: the mushroom head type Emergency Stop acts mechanically on the circuit breaker.
LJ7K09: the Emergency Stop function is performed by an undervoltage trip **GVAX385**, *acting on the circuit breaker. This circuit breaker is always supplied pre-wired for use on 380/400 V 50 Hz.*
(2) Avoid placing this material in contact with harsh substances (detergents, chlorine solvents, ketones, alcohol, aromatic hydrocarbons).
(3) In the reference, the voltage code **Q7 (380/400 V) indicates the power supply voltage** *to which the starter will be connected, it being assumed that the contactor has a ∿ 24 V coil (see control circuit scheme).*
(4) Some combinations of variants / control voltage may not be available. Please consult us.
(5) Dimensions of standard versions, comprising (if any) handle, pushbutton, indicator light.
(6) Example: **LJ7K06Q705A04**.
(7) Delete the last 2 digits of the selected starter reference. Example: **LJ7K06Q705** *becomes* **LJ7K06Q7**.
(8) Circuit breaker to be ordered separately.
References GV2ME: see chapter B6 “Circuit breakers”.

Dimensions:
page A1/54

Schemes:
page A1/55

Life Is On Schneider Electric

PB111898.eps

LG8K06

PB111899.eps

LG8K09

For Control + Isolation + Short circuit / Overload Protection

For OEM, the enclosed safety motor reverser starters comply with IEC 60204-1 “Safety of machinery” standards.

- ON/REVERSE/OFF motor starters: 2-way rotation control of 3-phase motor
- Emergency stop (1)
- Electrical circuit isolation, lockable on LG8K09 and LG8K12 with up to 3 padlocks
- Short circuit protection (switching back on power supply after tripping must be a deliberate action)
- Overload protection
- Protection against voltage drops for LG8K09, LG8K12. For LG8K06, a GVAX●● undervoltage trip may be added.
- Possible signaling with GV2SN●● indicator (to be ordered separately).

Range:
- 10 pre-equipped enclosed safety inverter starters from 0.06 to 5.5 kW.

Enclosures characteristics:
- Conforming to IEC 60947-1, IEC 60204-1 (1)
- Degree of protection according IEC 60529: IP55, IK07
- Ambient air temperature in operation -5 to +40°C
- Operational voltage (Ue) 690 V
- Operating position: same that as contactors
- Material: polycarbonate (2) .

Included:
- 2 LC1K prewired contactors
- 1 GV2ME thermal magnetic circuit breaker with mushroom emergency stop (release on ¼ turn)
- 1 “Stop” black pushbutton + 1 2-position spring return selector switch “I – II”
- 1 GVAX undervoltage release module with LG8K09, LG8K12 (to be ordered separately for LG8K06).

Reversing starters (with pushbutton control of isolation)

Standard power ratings of 3-phase motors 50-60 Hz in category AC-3			Circuit breaker Setting range of thermal trips	Dust & damp protected starter Basic reference, to be completed by adding the voltage code (3)	Weight	Overall dimensions (4) WxHxD
220/ 230 V	400/ 415 V	440 V				
kW	kW	kW	A		kg	
–	0.06	0.06	0.16…0.25	**LG8K06●●02**	1.640	175x165x177
0.06	0.09	0.12	0.25…0.40	**LG8K06●●03**	1.640	175x165x177
–	0.18	0.18	0.40…0.63	**LG8K06●●04**	1.640	175x165x177
0.12	0.25	0.25	0.63…1	**LG8K06●●05**	1.640	175x165x177
0.25	0.55	0.55	1…1.6	**LG8K06●●06**	1.640	175x165x177
0.37	0.75	1.1	1.6…2.5	**LG8K06●●07**	1.640	175x165x177
0.75	1.5	1.5	2.5…4	**LG8K06●●08**	1.640	175x165x177
1.1	2.2	3	4…6.3	**LG8K06●●10**	1.640	175x165x177
1.5	4	4	6…10	**LG8K09●●14**	1.640	175x165x177
3	5.5	5.5	9…14	**LG8K12●●16**	1.640	175x165x177

Voltage codes (3)			
Volts ∼ 50/60 Hz	220/ 230	380/ 400	400/ 415
	M7	Q7	N7

(1) **LG8K06**: *the mushroom head type Emergency Stop acts mechanically on the circuit breaker.*
LG8K09, LG8K12: *the Emergency Stop function is performed by an undervoltage trip, acting on the circuit breaker.*
This circuit breaker is always supplied pre-wired for use on 380/400/415 V 50 Hz.
For a 60 Hz supply, please consult your Regional Sales Office.
(2) Avoid allowing the material to come into contact with strong bases (detergents, chlorine solvents, ketones, alcohol, aromatic hydrocarbons).
(3) Please check the availability of your variant in the index page A1/34. The SEARCH function of your viewer can be used.
(4) Dimensions of standard versions, comprising (if any) handle, pushbutton, indicator light.

Dimensions:
page A1/52

Schemes:
page A1/53

PB111898.eps

LJ8K06

PB111899.eps

LJ8K09

For Control + Isolation + Short circuit /Overload Protection, with isolated 24 V control circuit

For OEM, the enclosed safety motor reverser starters comply with IEC 60204-1 “Safety of machinery” standards.

- ON/REVERSE/OFF motor starters: 2-way rotation control of 3-phase motor
- Emergency stop (1)
- Electrical circuit isolation, lockable on LJ8K09 with up to 3 padlocks
- Short circuit protection (switching back on power supply after tripping must be a deliberate action)
- Overload protection
- Protection against voltage drops for LJ8K09. For LJ8K06, a GVAX●● undervoltage trip may be added
- Possible signaling with GV2SN●● indicator (to be ordered separately).

Range:
- 9 pre-equipped enclosed safety inverter starters from 0.06 to 4 kW.

Enclosures characteristics:
- Conforming to IEC 60947-1, IEC 60204-1
- Degree of protection according IEC 60529: IP55, IK07
- Ambient air temperature in operation -5 to +40°C
- Operational voltage (Ue) 690 V
- Operating position: same that as contactors
- Material: polycarbonate (2).

Included:
- 2 LC1K prewired contactors
- 1 GV2ME thermal magnetic circuit breaker with mushroom emergency stop (release on ¼ turn)
- 1 Integral transformer: 400/24 V, 25 VA
- 1 “Stop” black pushbutton + 1 2-position spring return selector switch “I – II”
- 1 GVAX undervoltage release module with LJ8K09 (to be ordered separately for LJ8K06).
- Terminal allowing the connection of a volt-free contact, if required, in the control circuit.

Reversing motor starters with integral transformer, pre-wired for operation on a 3-phase 380 to 400 V 50 Hz supply (with pushbutton control of isolator function)

Standard power ratings of 3-phase motors 50 Hz in category AC-3	Circuit breaker	Dust and damp protected starter	Weight	Overall dimensions (5) WxHxD
	Setting range of thermal trips	Reference (3) (4)		
380/400 V				
kW	A		kg	
0.06	0.16…0.25	**LJ8K06Q702**	2.650	175x165x177
0.18	0.40…0.63	**LJ8K06Q704**	2.650	175x165x177
0.25	0.63…1	**LJ8K06Q705**	2.650	175x165x177
0.55	1…1.6	**LJ8K06Q706**	2.650	175x165x177
0.75	1.6…2.5	**LJ8K06Q707**	2.650	175x165x177
1.5	2.5…4	**LJ8K06Q708**	2.650	175x165x177
2.2	4…6.3	**LJ8K06Q710**	2.650	175x165x177
4	6…10	**LJ8K09Q714**	2.650	175x165x146

Variants (pre-assembled) (4)

Description	Variants available for starter	Suffix to be added to the starter reference
Without circuit breaker (7) (or undervoltage release voltage)	LJ8	(6)

(1) **LJ8K06***: the mushroom head type Emergency Stop acts mechanically on the circuit breaker.* **LJ8K09***: the Emergency Stop function is performed by an undervoltage trip* **GVAX385***, acting on the circuit breaker. This circuit breaker is always supplied pre-wired for use on 380/400 V 50 Hz.*
(2) Avoid placing this material in contact with harsh substances (detergents, chlorine solvents, ketones, alcohol, aromatic hydrocarbons).
(3) In the reference, the voltage code **Q7 (380/400 V) indicates the power supply voltage** *to which the starter will be connected, it being assumed that the contactor has a a 24 V coil (see control circuit scheme).*
(4) Please check the availability of your variant in the index page A1/34. The SEARCH function of your viewer can be used.
(5) Dimensions of standard versions, comprising (if any) handle, pushbutton, indicator light.
(6) Delete the last 2 digits of the selected starter reference. Example: **LJ8K09Q714** *becomes* **LJ8K09Q7**.
(7) Circuit breaker to be ordered separately. References GV2ME: see chapter B6 “Circuit breakers”.

Dimensions:
page A1/54

Schemes:
page A1/55

Life Is On Schneider Electric

Product references

GV2MCK04

+

GV2ME●●

+

GVAX●●●

GV2MCK04 enclosure is fitted with a mushroom pushbutton.
It allows, with addition of a circuit breaker and undervoltage trip, the construction of a safety direct-on-line starter conforming INRS and VDE0113.

Enclosures characteristics:
- Conforming to IEC 60947-2; IEC 60947-4-1
- Degree of protection according IEC 60529: refer to selection chart
- Operational voltage (Ue) 690 V
- Material : polycarbonate (1).

Enclosure

Enclosure for thermal-magnetic circuit breakers GV2ME

Type	Degree of protection	Possible no. of side mounting auxiliary contact blocks on GV2ME		Reference	Weight	Overall dimensions WxHxD
		LH side	RH side		kg	
Surface mounting, double insulated with protective conductor. Sealable cover	IP55	1	1	**GV2MCK04**	0.420	93x147x145.5

GV2ME circuit beaker, GVAX undervoltage trip
Product references: page A1/32.

(1) Avoid placing this material in contact with harsh substances (detergents, chlorine solvents, ketones, alcohol, aromatic hydrocarbons).

Life Is On Schneider Electric

TeSys Control

Enclosures, components, for customer assemblies
Spare parts

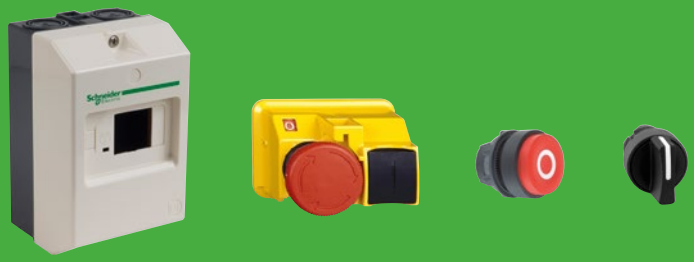

Product references

PB121229.eps

VCFXGE4

PB121230.eps

VBFXGE2

Empty enclosures with rotary handle

IP65 enclosure with red padlockable handle operator and yellow front plate
(for mounting a main or Emergency Stop switch-disconnector)

Ithe	For switch body	Nb. of possible add. module attachments	Reference [1]	Weight
A	A			kg
10…32	VN12, VN20 V02…V2	2	**VCFXGE1**	0.340
10…32	V02…V2	4	**VCFXGE4**	0.660
50…63	V3 - V4	3	**VCFXGE2**	0.660
100.... 140	V5 - V6	1	**VCFXGE6**	1.04

IP65 enclosure with black padlockable handle and black front plate
(for mounting a main switch-disconnector)

10…32	VN12, VN20 V02…V2	2	**VBFXGE1**	0.340
10…32	V02…V2	4	**VBFXGE4**	0.660
50…63	V3-V4	3	**VBFXGE2**	0.660
100.... 140	V5 - V6	1	**VBFXGE6**	1.04

Switch bodies to fit VCFX, VBFX enclosures [2]

Standard applications

Description	Rating	Reference	Weight
	A		kg
3-pole switch-disconnectors	10	**VN12**	0.110
	16	**VN20**	0.110

High performance applications

Description	Rating	Reference	Weight
	A		kg
3-pole switch-disconnectors	10	**V02**	0.200
	16	**V01**	0.200
	20	**V0**	0.200
	25	**V1**	0.200
	32	**V2**	0.200
	50	**V3**	0.500
	80	**V4**	0.500
	125	**V5**	0.900
	175	**V6**	0.900

PB121728.eps

V0

PB121232.eps

V4

(1) Enclosure not suitable in atmosphere contaminated with harsh substances (detergents, chlorine solvents, ketones, alcohol, aromatic hydrocarbons).
(2) For characteristics of switch-disconnectors, please consult your Regional Sales Office.

Dimensions:
page A1/38

Schemes:
page A1/39

Life Is On Schneider Electric

PB112286.eps

LE1GVMEK, LE1GVMEKA59

Empty enclosures with sealing device

Composition	Reference
Insulating enclosure with GV2E01 sealing device	**LE1GVMEK**
Insulating enclosure with GV2E01 sealing device, neutral terminal	**LE1GVMEKA59**

Direct-on-line starters characteristics

(based on LE1GVMEK enclosure + GV2ME circuit breaker + LC1K contactor assemblies)

Functions / range / specificities:
- Circuit Isolation
- Protection against short circuit
- Motor protection: motor OFF in case of overload – manual reset with the black pushbutton.
- ON/OFF motor control
- Functions can be completed with optional components: remote control, signaling.

Enclosures characteristics:
- Conforming to IEC 60947-4-1 standard
- Degree of protection IP55 , according IEC 60529
- Ambient air temperature in operation -5 to +40°C
- Operating position: same as K series contactors
- Material: polycarbonate [1].

- 6 ratings of direct-on-line starters from 0.37 to 5.5 kW (400 V AC) can be realized, based the combinations of circuit breaker + contactor to be ordered separately:
- ◻ GV2ME thermal magnetic circuit breaker, of the required rating (see below)
- ◻ LC1K contactor, of the required rating (see below)
- ◻ optional accessories (indicating light, On pushbutton, sealing kit…).

PB121673.tif

GV2ME●●

PB123778.eps

LC1K0610●●

Circuit breakers + contactors - Type 1 coordination [2]

Standard power ratings of 3-phase motors 50/60 Hz in AC-3			Setting range of thermal trips	Fixed magnetic current 13 Irth	For customer assembly	
400/ 415 V	440 V	500 V			Motor circuit breaker Reference	Contactor Reference to be completed with the coil voltage code [3]
kW	kW	kW	A	A		
0.37 0.55 -	0.37 0.55 -	0.37 0.55 0.75	1...1.6	22.5	**GV2ME06**	**LC1K0610●●**
0.75 -	0.75 1.1	- 1.1	1.6...2.5	33.5	**GV2ME07**	**LC1K0610●●**
1.1 1.5	- 1.5	1.5 2.2	2.5...4	51	**GV2ME08**	**LC1K0610●●**
2.2 -	2.2 3	- 3	4...6.3	78	**GV2ME10**	**LC1K0610●●**
3 4	- 4	4 5.5	6...10	138	**GV2ME14**	**LC1K0910●●**
5.5	5.5	7.5	9...14	170	**GV2ME16**	**LC1K1210●●**

Coil voltage codes

Volts	24	110	220/230	230	230/240	380/400
∼ 50/60 Hz	B7	F7	M7	P7	U7	Q7
⎓	BW3	-	-	-	-	-

BW3 coil: low consumption (1.5 W), wide range (0.7...1.3 Uc) with integral suppression device as standard.

(1) Avoid placing this material in contact with harsh substances (detergents, chlorine solvents, ketones, alcohol, aromatic hydrocarbons).
(2) Extract from Coordination tables see chapter A6.
(3) Please check the availability of your variant in the index page A1/34. The SEARCH function of your viewer can be used.

Dimensions:
page A1/51

Schemes:
page A1/51

Product references

PB112264.eps

DE1DS1A04

PB112269.eps

DE1DS1A05

PB112259.eps

DE1DS1

PB112275.eps

DE1DS1A13

Empty enclosures for starters without isolating device

Head(s) mounted on cover	Designed for use with	Reference
Without	LE1D09 and D12	**DE1DS1A04**
	LE1D18...D35	**DE1DS2A04**
	LE2D09...D35	**DE1DS2A04**
1 flush blue head “R”	LE1D09 and D12	**DE1DS1A05**
	LE1D18...D35	**DE1DS2A05**
	LE2D09...D35	**DE1DS2A05**
1 flush green head “I” 1 projecting red head “O”	LE1D09 and D12	**DE1DS1**
	LE1D18...D35	**DE1DS2**
1 flush blue head “R” 1 switch with 2 fixed positions	LE1D09 and D12	**DE1DS1A13**
	LE1D18...D35	**DE1DS2A13**

Dimensions:
page A1/46

Life Is On Schneider Electric

Product references

PB111891.eps

DE1KS217A06

PB111886.eps

DE1KS217A06A37

Empty enclosures for security starters

Designed for use with	Head(s) mounted on cover	Add-on blocks	Reference
LG7	Without		**DE1KS217A04**
	1 flush white head “I” 1 projecting black head “O”		**DE1KS217A06**
	1 flush white head “I” 1 projecting black head “O” 1 head emergency stop	Padlocking devices	**DE1KS217A06A37**

Dimensions:
page A1/52

PB111915.eps

GV2V01

PB112390.eps

GV2K011

PG113130.eps

GV2K021

8274.eps

GV2K031

PB112393.eps

GV2K04

PB121228.eps

GV2E01 – GV2E02

PB502236.eps

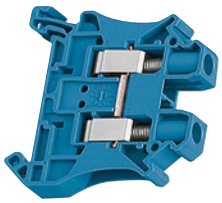

NSYTRV62BL

PB502246.eps

NSYTRAC22BL

PB112218.eps

GV2CP21

Accessories

Description			Sold in lots of	Unit reference	Weight kg
Padlocking device [6] for GV2ME operator (padlocking is only possible in the "O" position)		1 to 3 padlocks Ø 4 to 8 mm	1	**GV2V01**	0.075
Mushroom head pushbutton Ø 40 mm, red, IP55	Spring return [2]		1	**GV2K011**	0.052
	Emergency stop Latching [2]	Key release, key n° 455	1	**GV2K021**	0.160
		Turn to release	1	**GV2K031**	0.115
		Turn to release, padlockable	1	**GV2K04** [1]	0.120
Sealing kit	For enclosures and front plate	IP 55 for temperature between +5 °C and +40 °C	10	**GV2E01**	0.012
		IP 55 for temperature between -20 °C and +40 °C	10	**GV2E02**	0.012
Linergy passthrough neutral terminal block – 6 mm² 41 A single-level 1x1 screw			50	**NSYTRV62BL**	0.015
End cover for Linergy screw single-level terminal block			50	**NSYTRAC22BL**	0.003

*(1) Circuit breaker to be ordered separately. Commercial references of **GV2ME01** to **M22**: see chapter B6 "Circuit breakers".*
*(2) Supplied with IP55 **GV2E01** sealing kit. To be fitted with enclosure **GV2M●01**.*
(3) Padlockable in "O" position using Ø 4 to 8 mm shank padlocks.

Separate front plate for GV2ME

Provides a sealing cover to GV2ME circuit breaker, on any kind of front panel.

Front plate

Description		Reference	Weight kg
For direct control, through a panel, of a chassis mounted GV2ME	IP55	**GV2CP21**	0.800

Life Is On Schneider Electric

Product references

PB121233.eps

ZB5AA331

PB121234.eps

ZB5AL432

PB121235.eps

LAD9091

DB403452.eps

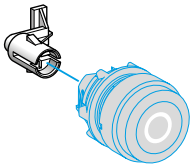

PF141168.eps

ZB5AD●

PB121236.eps

ZENL1111

PB121237.eps

DB403455.eps

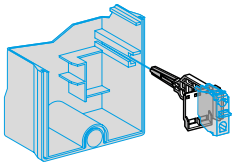

LAD90909

Heads for Start and Stop/Reset pushbuttons

Description	For use on	Unit reference
Flush, green “I” (1)	LE1, LE3, LE4, LE6 D09...D35	**ZB5AA331**
Projecting, red “O” (1)	LE●D09...D35	**ZB5AL432**
Adaptation kit for head ZB5AL432	LE1D09 and D12	**LAD9091**
	LE1D18...D35, LE2D09...D35	**LAD91810**
	LE3, LE4, LE6 and LE8 D09...D35	**LAD9T4**

Heads for Reset pushbuttons

Flush, blue “R” (2)	LE●D09...D35	**ZB5AA0**
		+ **ZBA639** (3)
Adaptation kit for head ZB5AA0 + ZBA639	LE1D09 and D12	**LAD9092**
	LE1D18...D35, LE2D09...D35	**LAD91810**
	LE3, LE6, LE4 and LE8D09...D35	**LAD9T4**

Heads for selector switches

3-position stay put	LE1D09...D35●●A09	**ZB5AD3**
2-position stay put	LE1D09...D35●●A13	**ZB5AD2**
3-position spring return to centre	LE2D09...D35 LE8D09...D35	**ZB5AD5**

Contact blocks

1 N/O spring return	LE●D09...D35	**ZENL1111**
1 N/C spring return	LE●D09...D35	**ZENL1121**
Mounting for contact block	LE1D09 and D12	**LAD90909**
	LE1D18...D35, LE2, LE3, LE4, LE6 and LE8D09...D35	**LAD91809**

(1) Remember to order adaptation kit LAD9091 or LAD91810 or LAD9T4, depending on size.
(2) Remember to order adaptation kit LAD9092 or LAD91810 or LAD9T4, depending on size.
(3) Sold in lots of 10.

PB121673.tif

GV2ME●●

Thermal magnetic circuit breakers, with screw clamp terminals

GV2ME with pushbutton control

Standard power ratings of 3-phase motors 50/60 Hz in category AC-3									Setting range of thermal trips (2)	Magnetic tripping current Id ± 20 %	Reference
400/415 V			500 V			690 V					
P	Icu	Ics (1)	P	Icu	Ics (1)	P	Icu	Ics (1)			
kW	kA	%	kW	kA	%	kW	kA	%	A	A	
–	–	–	–	–	–	–	–	–	0.1…0.16	1.5	**GV2ME01**
0.06	★	★	–	–	–	–	–	–	0.16…0.25	2.4	**GV2ME02**
0.09	★	★	–	–	–	–	–	–	0.25…0.40	5	**GV2ME03**
0.12	★	★	–	–	–	**0.37**	★	★	0.40…0.63	8	**GV2ME04**
0.18	★	★	–	–	–	–	–	–			
0.25	★	★	–	–	–	**0.55**	★	★	0.63…1	13	**GV2ME05**
0.37	★	★	**0.37**	★	★	–	–	–	1…1.6	22.5	**GV2ME06**
0.55	★	★	**0.55**	★	★	**0.75**	★	★			
–	–	–	**0.75**	★	★	**1.1**	★	★			
0.75	★	★	**1.1**	★	★	**1.5**	3	75	1.6…2.5	33.5	**GV2ME07**
1.1	★	★	**1.5**	★	★	**2.2**	3	75	2.5…4	51	**GV2ME08**
1.5	★	★	**2.2**	★	★	**3**	3	75			
2.2	★	★	**3**	50	100	**4**	3	75	4…6.3	78	**GV2ME10**
3	★	★	**4**	10	100	**5.5**	3	75	6…10	138	**GV2ME14**
4	★	★	**5.5**	10	100	**7.5**	3	75			
5.5	15	50	**7.5**	6	75	**9**	3	75	9…14	170	**GV2ME16**
–	–	–	–	–	–	**11**	3	75			
7.5	15	50	**9**	6	75	**15**	3	75	13…18	223	**GV2ME20**
9	15	40	**11**	4	75	**18.5**	3	75	17…23	327	**GV2ME21**
11	15	40	**15**	4	75	–	–	–	20…25	327	**GV2ME22** (3)

GV2ME technical characteristics: see in chapter B6.

PB121677.eps

GVAX●●●

Undervoltage trip, INRS (can only be mounted on GV2ME)
Safety device for dangerous machines conforming to INRS and VDE0113

Side (1 block on RH side of circuit breaker GV2 ME)	110…115 V	50 Hz	**GVAX115**
		60 Hz	**GVAX116**
	127 V	60 Hz	**GVAX115**
	220…240 V	50 Hz	**GVAX225**
		60 Hz	**GVAX226**
	380…400 V	50 Hz	**GVAX385**
		60 Hz	**GVAX386**
	415…440 V	50 Hz	**GVAX415**
	440 V	60 Hz	**GVAX385**

GVAX technical characteristics: see in chapter B6.

(1) As % of Icu.
(2) The thermal trip setting must be within the range marked on the graduated knob.
*(3) Maximum rating which can be mounted in enclosures **GV2MC** or **MP**, please consult your Regional Sales Office.*
★ > 100 kA.

PB123794.tif

LR2K●●

Thermal overload relays - selection table

LR2K thermal overload relays can be mounted on all 3P LC1K contactors with screw clamp connectors.

Class 10 A (the standard specifies a tripping time of between 2 and 10 seconds at 7.2 In)

Relay setting range	Fuses to be used with selected relay Maximum rating Type			Reference
	aM	gG	BS88	
A	A	A	A	
0.11…0.16	0.25	0.5	–	**LR2K0301**
0.16…0.23	0.25	0.5	–	**LR2K0302**
0.23…0.36	0.5	1	–	**LR2K0303**
0.36…0.54	1	1.6	–	**LR2K0304**
0.54…0.8	1	2	–	**LR2K0305**
0.8…1.2	2	4	6	**LR2K0306**
1.2…1.8	2	6	6	**LR2K0307**
1.8…2.6	4	8	10	**LR2K0308**
2.6…3.7	4	10	16	**LR2K0310**
3.7…5.5	6	16	16	**LR2K0312**
5.5…8	8	20	20	**LR2K0314**
8…11.5	10	25	20	**LR2K0316**
10…14	16	32	25	**LR2K0321**
12…16	20	40	32	**LR2K0322**

LRD thermal overload relays can only be mounted on LC1D contactors of same size ratio and with screw clamp connectors.

PB121670.tif

LRD●●

Relay setting range (A)	Fuses to be used with selected relay			For use with contactor LC1	Reference
	aM (A)	gG (A)	BS88 (A)		
Class 10 A [1] for connection by screw clamp terminals or connectors					
0.10…0.16	0.25	2	–	D09…D38	**LRD01**
0.16…0.25	0.5	2	–	D09…D38	**LRD02**
0.25…0.40	1	2	–	D09…D38	**LRD03**
0.40…0.63	1	2	–	D09…D38	**LRD04**
0.63…1	2	4	–	D09…D38	**LRD05**
1…1.6	2	4	6	D09…D38	**LRD06**
1.6…2.5	4	6	10	D09…D38	**LRD07**
2.5…4	6	10	16	D09…D38	**LRD08**
4…6	8	16	16	D09…D38	**LRD10**
5.5…8	12	20	20	D09…D38	**LRD12**
7…10	12	20	20	D09…D38	**LRD14**
9…13	16	25	25	D12…D38	**LRD16**
12…18	20	35	32	D18…D38	**LRD21**
16…24	25	50	50	D25…D38	**LRD22**
23…32	40	63	63	D25…D38	**LRD32**
30…38	40	80	80	D32 and D38	**LRD35**

Product references

DE1DS1	KZ18	LE1D18P7	LE1M35N706
DE1DS1A04	KZ20	LE1D18P7A04	LE1M35N707
DE1DS1A05	KZ21	LE1D18P7A05	LE1M35N708
DE1DS1A13	KZ27	LE1D18P7A13	LE1M35N710
DE1DS2	KZ28	LE1D18Q7	LE1M35N712
DE1DS2A04	KZ30	LE1D18Q7A09	LE1M35N714
DE1DS2A05	KZ50	LE1D18R7	LE1M35N716
DE1DS2A13	KZ52	LE1D18U7	LE1M35N721
DE1KS217A04	KZ62	LE1D18V7	LE1M35N722
DE1KS217A06	KZ65	LE1D18V7A04	LE1M35P7
DE1KS217A06A29	KZ66	LE1D18V7A05	LE1M35P705
DE1KS217A06A37	KZ67	LE1D18V7A13	LE1M35P706
DE1KS217A29	KZ77	LE1D25B7	LE1M35P707
DE1KS217A29A37	KZ93	LE1D25F7	LE1M35P708
DE1KS217A37	LAD90909	LE1D25M7	LE1M35P710
DE2DS2	LAD9091	LE1D25M7A09	LE1M35P712
DK1FB005	LAD9092	LE1D25N7	LE1M35P714
GV2CP21	LAD91809	LE1D25P7	LE1M35P716
GV2E01	LAD91810	LE1D25P7A04	LE1M35P721
GV2E02	LAD9T4	LE1D25P7A05	LE1M35P722
GV2E03	LC1KV7A80	LE1D25P7A13	LE1M35Q7
GV2K011	LE1D09B7	LE1D25Q7	LE1M35Q705
GV2K021	LE1D09E7	LE1D25Q7A09	LE1M35Q706
GV2K031	LE1D09F7	LE1D25R7	LE1M35Q707
GV2K04	LE1D09M7	LE1D25U7	LE1M35Q708
GV2MC01	LE1D09M7A04	LE1D25V7	LE1M35Q710
GV2MC02	LE1D09M7A13	LE1D25V7A04	LE1M35Q712
GV2MC03	LE1D09N7	LE1D25V7A13	LE1M35Q714
GV2MCK04	LE1D09N7A04	LE1D35B7	LE1M35Q716
GV2ME01	LE1D09P7	LE1D35E7	LE1M35Q721
GV2ME02	LE1D09P7A04	LE1D35F7	LE1M35Q722
GV2ME03	LE1D09P7A05	LE1D35M7	LE1M35R705
GV2ME04	LE1D09P7A09	LE1D35N7	LE1M35R706
GV2ME05	LE1D09P7A13	LE1D35P7	LE1M35R708
GV2ME06	LE1D09P7A13T	LE1D35P7A04	LE1M35R710
GV2ME07	LE1D09P7A95	LE1D35P7A05	LE1M35R714
GV2ME08	LE1D09P7T	LE1D35Q7	LE1M35R716
GV2ME10	LE1D09Q7	LE1D35R7	LE1M35R721
GV2ME14	LE1D09Q7A04	LE1D35U7	LE1M35R722
GV2ME16	LE1D09Q7A05	LE1D35V7	LE1M35U706
GV2ME20	LE1D09Q7A13	LE1D40AFE7	LE1M35U707
GV2ME21	LE1D09R7	LE1D40AP7	LE1M35U708
GV2ME22	LE1D09U7	LE1D40AQ7	LE1M35U710
GV2MP01	LE1D09U7A13	LE1D50AFE7	LE1M35U712
GV2MP02	LE1D09V7	LE1D50AP7	LE1M35U714
GV2MP03	LE1D09V7A04	LE1D50AP7A04	LE1M35U716
GV2MP04	LE1D09V7A09	LE1D50AQ7	LE1M35U721
GV2PC01	LE1D09V7A13	LE1D65AP7	LE1M35U722
GV2PC02	LE1D12E7	LE1D65AP7A04	LE1M35V7
GV2SN23	LE1D12F7	LE1D65AQ7	LE1M35V706
GV2SN24	LE1D12M7	LE1GVMEK	LE1M35V707
GV2SN33	LE1D12M7A04	LE1GVMEKA59	LE1M35V708
GV2SN34	LE1D12M7A09	LE1M35B705	LE1M35V710
GV2V01	LE1D12N7	LE1M35B706	LE1M35V712
GV3PC01	LE1D12P7	LE1M35B707	LE1M35V714
GV3PC02	LE1D12P7A04	LE1M35B710	LE1M35V716
GVAX115	LE1D12P7A05	LE1M35B712	LE1M35V721
GVAX116	LE1D12P7A13	LE1M35B714	LE1M35V722
GVAX225	LE1D12Q7	LE1M35B716	LE2D09M7
GVAX226	LE1D12R7	LE1M35F710	LE2D09N7
GVAX385	LE1D12U7	LE1M35M7	LE2D09P7
GVAX386	LE1D12U7A09	LE1M35M705	LE2D09Q7
GVAX415	LE1D12V7	LE1M35M706	LE2D09U7
KAD1PZ	LE1D12V7A04	LE1M35M707	LE2D09V7
KCC1Y	LE1D12V7A05	LE1M35M708	LE2D12B7
KZ101	LE1D12V7A09	LE1M35M710	LE2D12N7
KZ103	LE1D12V7A13	LE1M35M712	LE2D12Q7
KZ106	LE1D18E7	LE1M35M714	LE2D12U7
KZ13	LE1D18F7	LE1M35M716	LE2D12V7
KZ14	LE1D18M7	LE1M35M721	LE2D18M7
KZ15	LE1D18N7	LE1M35M722	LE2D18N7
KZ16	LE1D18N7A04	LE1M35N705	LE2D18P7

This document is current. Click on the product reference to get the most recent availability status (hyperlink to **se.com** product datasheet).
If your product variant is no longer available, please consult your distributor or regional sales office.

Life Is On Schneider Electric

Product references

LE2D18V7	LE4D18B7	LG1K065Q704	LG7K06P710
LE2D25M7	LE4D18F7	LG1K065Q705	LG7K06Q7
LE2D25N7	LE4D18M7	LG1K065Q706	LG7K06Q702
LE2D25P7	LE4D18N7	LG1K065Q706A37	LG7K06Q704
LE2D25V7	LE4D18P7	LG1K065Q707	LG7K06Q705
LE2D35P7	LE4D18Q7	LG1K065Q707A37	LG7K06Q706
LE2D35V7	LE4D18U7	LG1K065Q708	LG7K06Q706A29
LE2D40AP7	LE4D18V7	LG1K065Q708A37	LG7K06Q707
LE2D40AQ7	LE4D18V7A05	LG1K065Q710	LG7K06Q707A29
LE2D65AQ7	LE4D25B7	LG1K065Q710A37	LG7K06Q708
LE2K064N7	LE4D25F7	LG1K065V702	LG7K06Q708A29
LE2K065M7	LE4D25M7	LG1K065V704	LG7K06Q710
LE2K065P7	LE4D25N7	LG1K065V706	LG7K06Q710A29
LE2K065Q7	LE4D25P7	LG1K065V710	LG7K06V707
LE2K065U7	LE4D25P7A05	LG1K095M7	LG7K06V708
LE2K065V7	LE4D25Q7	LG1K095M714	LG7K06V710
LE2K095U7	LE4D25V7	LG1K095M714A37	LG7K09M7
LE2K095V7	LE4D35B7	LG1K095N714	LG7K09M714
LE3D09B7	LE4D35M7	LG1K095P714	LG7K09M714A04
LE3D09N7	LE4D35N7	LG1K095Q7	LG7K09N714
LE3D09P7	LE4D35P7	LG1K095Q714	LG7K09P714
LE3D09P7A04	LE4D35U7	LG1K095Q714A37	LG7K09Q714
LE3D09Q7	LE4D35V7	LG7D12B716	LG7K09V714
LE3D09V7	LE4K065P7	LG7D12M7	LG8K06B707
LE3D09V7A04	LE4K065V7	LG7D12M716	LG8K06M7
LE3D12B7	LE6D09B7	LG7D12N716	LG8K06M702
LE3D12M7	LE6D12B7	LG7D12P716	LG8K06M704
LE3D12N7	LE6D12P7	LG7D12Q716	LG8K06M705
LE3D12P7	LE6D12V7	LG7D12V716	LG8K06M706
LE3D12P7A04	LE6D18B7	LG7D18B720	LG8K06M707
LE3D12Q7	LE6D18P7	LG7D18B721	LG8K06M710
LE3D12U7	LE6D18V7	LG7D18M7	LG8K06N705
LE3D12V7	LE8D09V7	LG7D18M720	LG8K06N706
LE3D18B7	LE8D12P7	LG7D18M721	LG8K06N707
LE3D18M7	LE8D12Q7	LG7D18P720	LG8K06Q7
LE3D18N7	LE8D12V7	LG7D18Q7	LG8K06Q702
LE3D18P7	LE8D18V7	LG7D18Q720	LG8K06Q703
LE3D18P7A04	LE8D25V7	LG7D18Q721	LG8K06Q704
LE3D18Q7	LE8D35V7	LG7D18V720	LG8K06Q705
LE3D18U7	LE8K065P7	LG7K06B703	LG8K06Q706
LE3D18V7	LG1D122M716	LG7K06B704	LG8K06Q707
LE3D35M7	LG1D122P716	LG7K06B706	LG8K06Q707A14
LE3D35N7	LG1D122Q7	LG7K06B707	LG8K06Q708
LE3D35P7	LG1D122Q716	LG7K06B710	LG8K06Q708A39
LE3D35Q7	LG1D182M720	LG7K06B710A04	LG8K06Q710
LE3D35U7	LG1D182M721	LG7K06M7	LG8K09M7
LE3D35V7	LG1D182N720	LG7K06M702	LG8K09M714
LE4D09B7	LG1D182Q7	LG7K06M703	LG8K09N714
LE4D09M7	LG1D182Q720	LG7K06M704	LG8K09Q714
LE4D09P7	LG1K065M703	LG7K06M705	LG8K12Q716
LE4D09P7A04	LG1K065M705	LG7K06M705A04	LJ7K06Q7
LE4D09P7A05	LG1K065M705A37	LG7K06M705A29	LJ7K06Q702
LE4D09Q7	LG1K065M706	LG7K06M706	LJ7K06Q703
LE4D09R7	LG1K065M707	LG7K06M707	LJ7K06Q705
LE4D09U7A05	LG1K065M707A37	LG7K06M707A04	LJ7K06Q705A04
LE4D09V7	LG1K065M708	LG7K06M707A39	LJ7K06Q705A29
LE4D09V7A04	LG1K065M710	LG7K06M708	LJ7K06Q706
LE4D12B7	LG1K065M710A37	LG7K06M708A04	LJ7K06Q706A04
LE4D12E7	LG1K065N705	LG7K06M708A29	LJ7K06Q707
LE4D12F7	LG1K065N706	LG7K06M710	LJ7K06Q707A04
LE4D12M7	LG1K065N708	LG7K06M710A04	LJ7K06Q707A29
LE4D12N7	LG1K065N710	LG7K06M710A29	LJ7K06Q708
LE4D12P7	LG1K065P703	LG7K06N704	LJ7K06Q708A04
LE4D12P7A04	LG1K065P707	LG7K06N705	LJ7K06Q708A29
LE4D12P7A05	LG1K065P708	LG7K06N706	LJ7K06Q710
LE4D12Q7	LG1K065P710	LG7K06N707	LJ7K06Q710A04
LE4D12V7	LG1K065Q7	LG7K06N710	LJ7K09Q7
LE4D12V7A04	LG1K065Q702	LG7K06P704	LJ7K09Q714
LE4D12V7A05	LG1K065Q703	LG7K06P708	LJ7K09Q714A04

This document is current. Click on the product reference to get the most recent availability status (hyperlink to **se.com** product datasheet).
If your product variant is no longer available, please consult your distributor or regional sales office.

LJ7K09Q7A04A39	VBD0	VCD01	VZ0
LJ8K06Q702	VBD01	VCD02	VZ01
LJ8K06Q704	VBD02	VCD1	VZ02
LJ8K06Q705	VBD1	VCD2	VZ1
LJ8K06Q706	VBD2	VCDN12	VZ10
LJ8K06Q707	VBDN12	VCDN20	VZ11
LJ8K06Q707A04	VBDN20	VCF0	VZ12
LJ8K06Q708	VBF0	VCF01	VZ13
LJ8K06Q710	VBF01	VCF01GE	VZ14
LJ8K09Q7	VBF01GE	VCF01GEGP	VZ15
LJ8K09Q714	VBF02	VCF02	VZ16
LR2K0301	VBF02GE	VCF02GE	VZ17
LR2K0302	VBF0GE	VCF02GEGP	VZ17L127
LR2K0303	VBF1	VCF0GE	VZ17L69
LR2K0304	VBF1GE	VCF0GEGP	VZ18
LR2K0305	VBF2	VCF1	VZ2
LR2K0306	VBF2GE	VCF1GE	VZ20
LR2K0307	VBF3	VCF1GEGP	VZ26
LR2K0308	VBF3GE	VCF1YZ	VZ27
LR2K0310	VBF4	VCF2	VZ28
LR2K0312	VBF4GE	VCF2GE	VZ29
LR2K0314	VBF5	VCF3	VZ3
LR2K0316	VBF5GEN	VCF3GE	VZ30
LR2K0321	VBF6	VCF4	VZ31
LR2K0322	VBF6GEN	VCF4GE	VZ4
LRD01	VBFXGE1	VCF5	VZ45
LRD02	VBFXGE2	VCF5GEN	VZ7
LRD03	VBFXGE4	VCF6	VZ8
LRD04	VBFXGE6	VCF6GEN	VZ9
LRD05	VC1GUN	VCFN12GE	VZN05
LRD06	VC2GUN	VCFN20GE	VZN06
LRD07	VC3GUN	VCFN25GE	VZN08
LRD08	VC4GUN	VCFN32GE	VZN11
LRD10	VC5GUN	VCFN40GE	VZN12
LRD12	VC6GUN	VCFXGE1	VZN14
LRD14	VCCD0	VCFXGE2	VZN17
LRD16	VCCD01	VCFXGE4	VZN19
LRD21	VCCD02	VCFXGE6	VZN20
LRD22	VCCD1	VGP1	VZN26
LRD32	VCCD2	VGPCLIP1	VZN30
LRD35	VCCDN12	VN12	Z01
NSYTRAC22BL	VCCDN20	VN20	ZB5AA331
NSYTRV62BL	VCCF0	VVD0	ZB5AD2
V0	VCCF01	VVD1	ZB5AD3
V01	VCCF02	VVD2	ZB5AD5
V02	VCCF1	VVD3	ZB5AL432
V1	VCCF2	VVD4	ZENL1111
V2	VCCF3	VVE0	ZENL1121
V3	VCCF4	VVE1	
V4	VCCF5	VVE2	
V5	VCCF6	VVE3	
V6	VCD0	VVE4	

This document is current. Click on the product reference to get the most recent availability status (hyperlink to **se.com** product datasheet).
If your product variant is no longer available, please consult your distributor or regional sales office.

Life Is On Schneider Electric

Technical Data for Designers

Contents

Switch-disconnectors ..... A1/38 to A1/40
Direct-on-line starters ..... A1/41, A1/43 to A1/49
.....and A1/51
Star-delta starters ..... A1/42 and A1/50
Starters for safety applications ..... A1/52 to A1/55

Dimensions

VCFN12GE to VCFN40GE

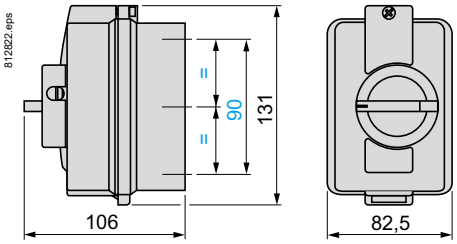

Cable glands: 2x ISO 20 top and bottom, 2x ISO 16 rear.

VCF or VBF02GE to 4GE, VCF••GEGP and VCF•GEGP, VCFX or VBFXGE1 to GE4

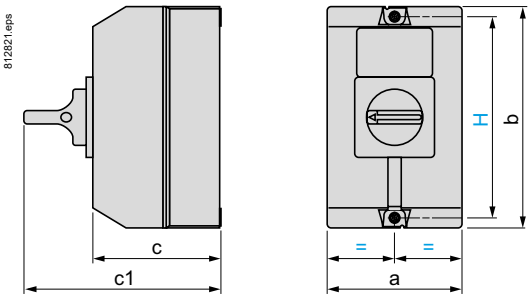

	a	b	c	c1	H
V•F02GE to V•F2GE, V•FXGE1 VCF••GEGP and VCF•GEGP (1)	90	146	85	131	130
V•F3GE and **V•F4GE** (2)	157	180	107	152	164
V•FXGE2 and **V•FXGE4** (2)	157	180	107	152	164

(1) Cable glands: 2x ISO 16 rear, 4x ISO 20/25 top and bottom.
(2) Cable glands: 4x ISO 25/32 rear, 4x ISO 25/32 top and bottom.

VCF or VBF5GEN and 6GEN

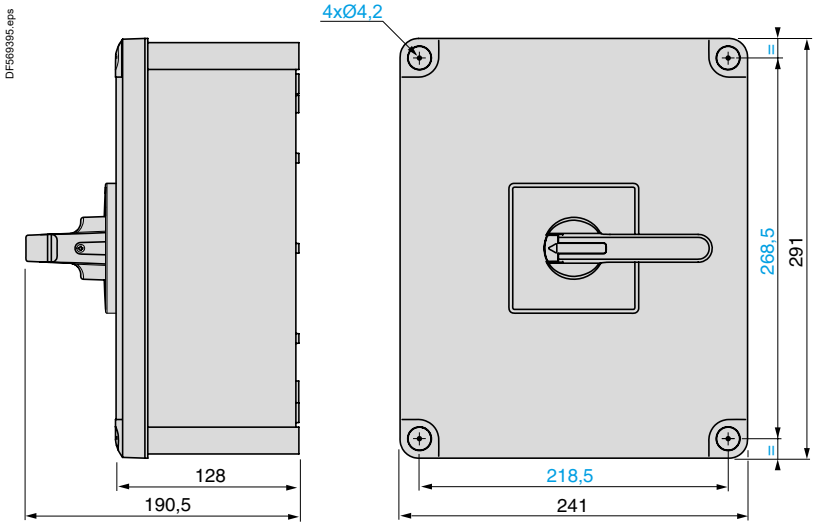

Ref.

References:
pages A1/3 and A1/26

Schemes:
page A1/39

Life Is On Schneider Electric

Schemes

Schemes

Switch-disconnectors

Enclosed or switch bodies	Main pole module	Neutral pole module
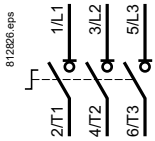		

Auxiliary contact blocks

VZ7	VZ20	VZN05	VZN06

References:
pages A1/3 and A1/26

Dimensions:
page A1/38

Dimensions, schemes

Dimensions

VC1GUN and VC2GUN

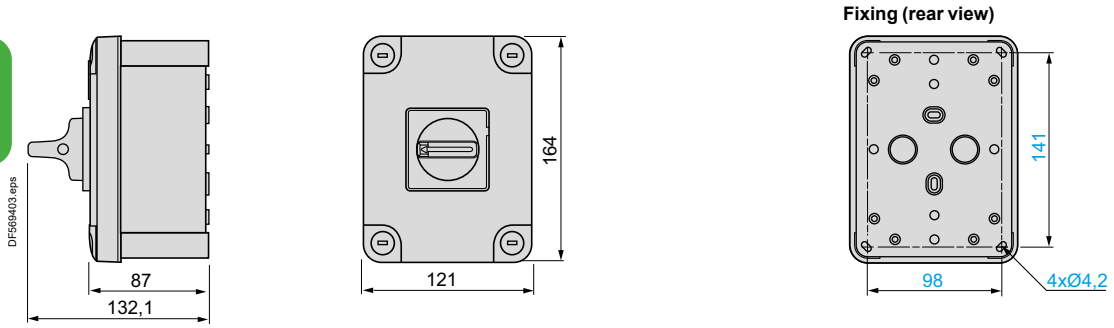

VC3GUN and VC4GUN

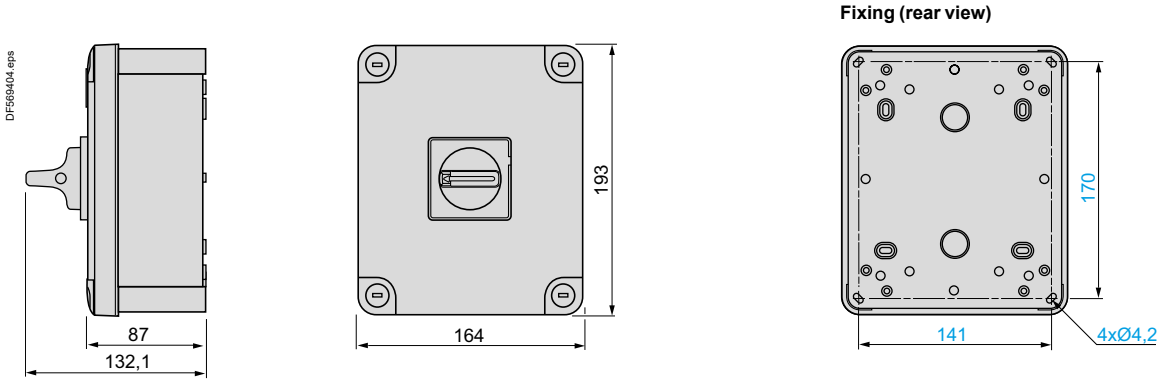

VC5GUN and VC6GUN

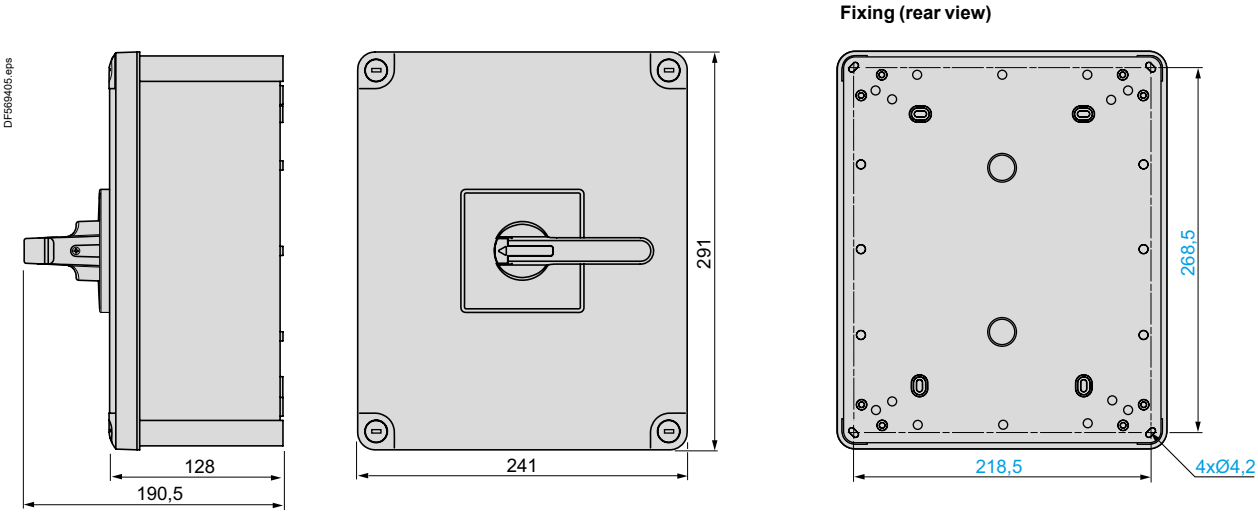

Schemes

Switch-disconnectors

Enclosed switch-disconnectors or switch bodies	Main pole module	Neutral pole module

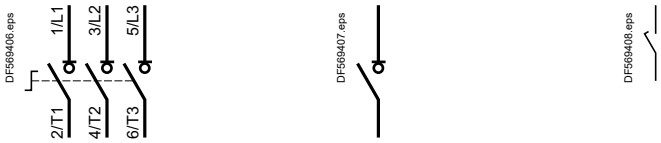

Auxiliary contact block modules

VZ7	VZ20

References:
page A1/4

Life Is On Schneider Electric

Dimensions, schemes

Dimensions

LE1M35 (1)

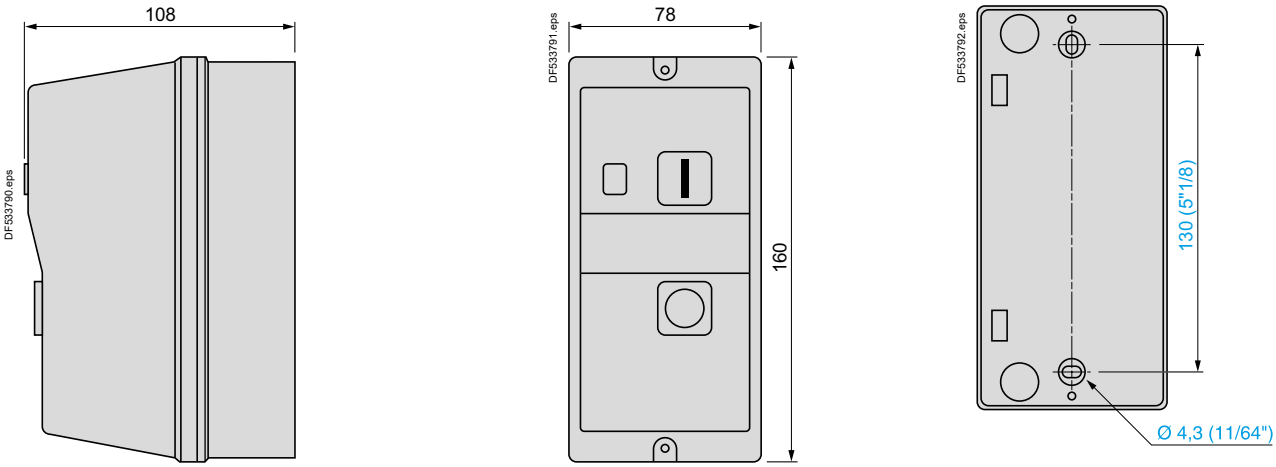

Knock-outs or blanking plugs for cable glands

Enclosure type	At top		At bottom	
	PG	ISO	PG	ISO
LE1 M	2 x 13 to 2 x 21	2 x 20 or 2 x 25	2 x 13 to 2 x 21	2 x 20 or 2 x 25

(1) Can be mounted on machine panel or frame. Knock-outs for 4 x 13 P cable glands.

Schemes

LE1M35

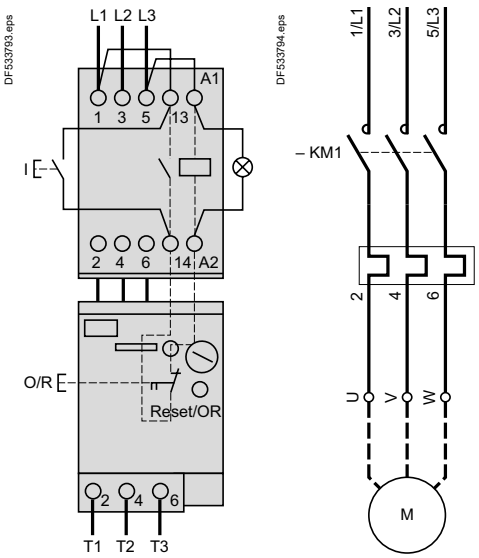

Choice of type of control built into the product

Control by latching pushbuttons

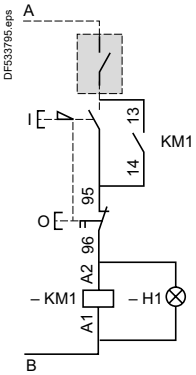

Control by spring return pushbuttons

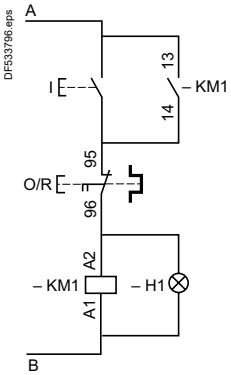

Connections

Power voltage	Control circuit voltage	A	B
380 V, 400 V, 415 V, 440 V	220 V, 230 V, 240 V	L3	Neutral
	380 V, 400 V, 415 V, 440 V	L3	L1
	Other voltages	For customer assembly	
Other voltages	All voltages (440 V max)	For customer assembly	

References:
page A1/7

Dimensions

LE6D09…D18

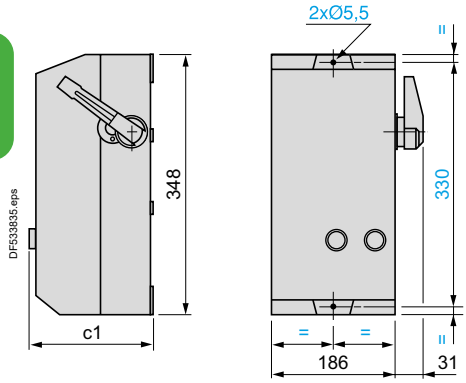

	c1
Standard version	175.5
Variant A04	167
Variant A05	175.5

Knock-outs or blanking plugs for cable glands

Type of enclosure	At top		At bottom	
	PG	ISO	PG	ISO
LE6D09…D18	–	2 x 20 or 2 x 25 or 2 x 32 or 2 x 40	–	2 x 20 or 2 x 25 or 2 x 32 or 2 x 40

Schemes

LE6D09…D18

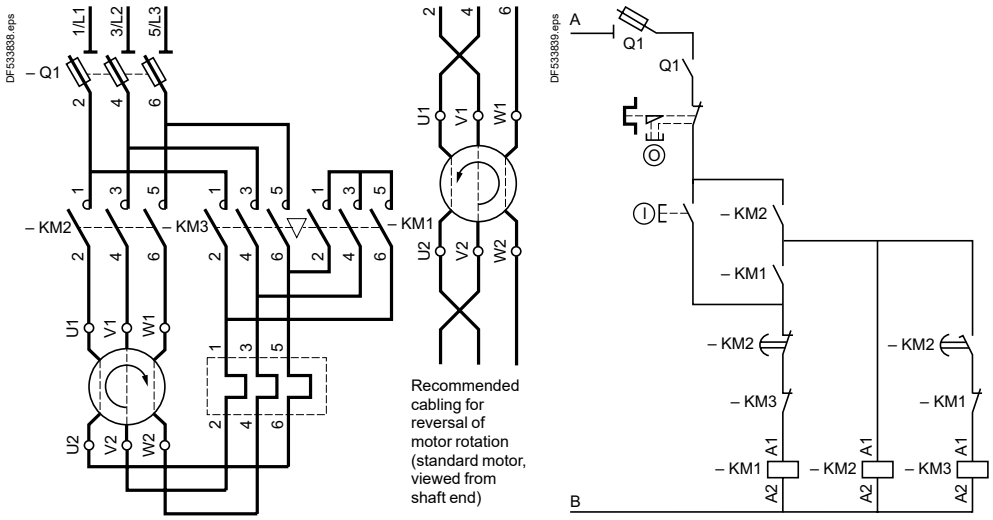

Connections

Power voltage	Control circuit voltage	A	B
380 V, 400 V, 415 V, 440 V	220 V, 230 V, 240 V	L3	Neutral terminal
	380 V, 400 V, 415 V, 440 V	L3	L1
	Other voltages	Terminal 1	Terminal 2
Other voltages	All voltages (600 V max)	For customer assembly	

References:
page A1/16

Life Is On Schneider Electric

Dimensions, schemes

Dimensions

GV2PC●●

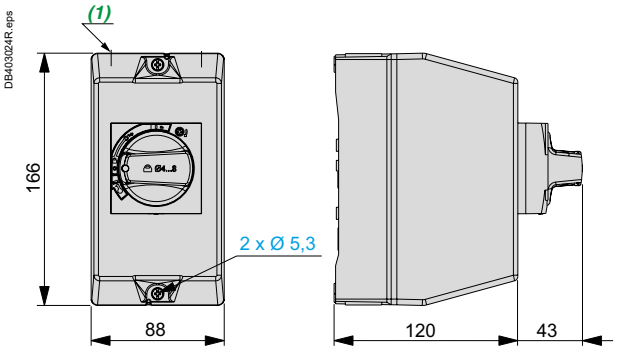

(1) Top face: 2 knock-outs for ISO20 cable glands.
Bottom face: 2 knock-outs for ISO20 cable glands.

GV3PC●●

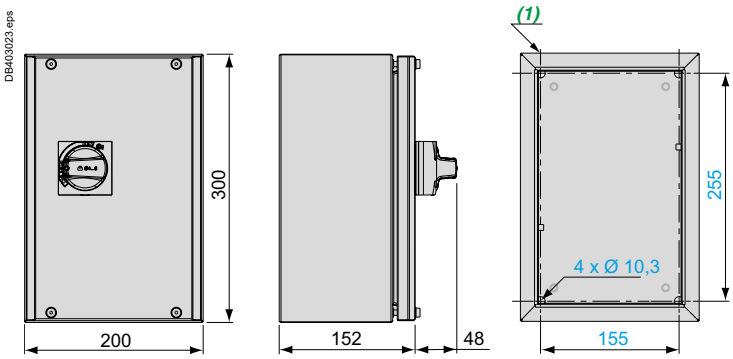

(1) Top face: 1 blanking plug for ISO32 cable gland.
Bottom face: 2 blanking plugs for ISO32 cable gland + 1 blanking plug for ISO20 cable gland.

Schemes

GV2L

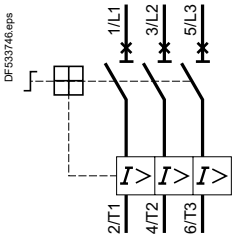

GV2P

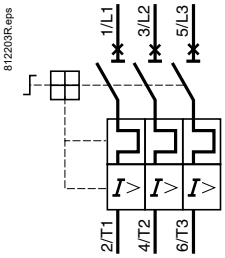

GV3L

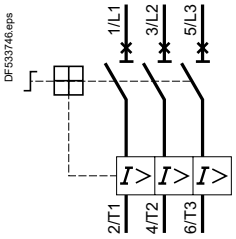

GV3P

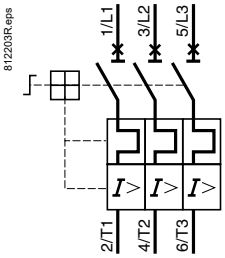

References:
pages A1/9 to A1/10

Dimensions, mounting

Dimensions

Surface mounting enclosure GV2MC0●

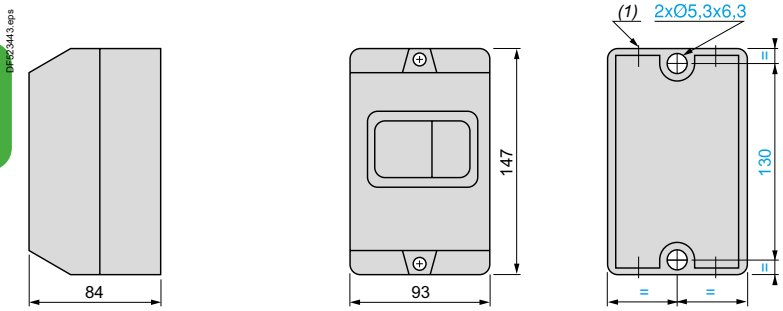

(1) Top face: 2 knock-outs for ISO20/25 cable glands or Pg16 or 16mm conduits.
Bottom face: 2 knock-outs for ISO20/25 cable glands or Pg16 or 16mm conduits.

Surface mounting enclosure GV2MCK04

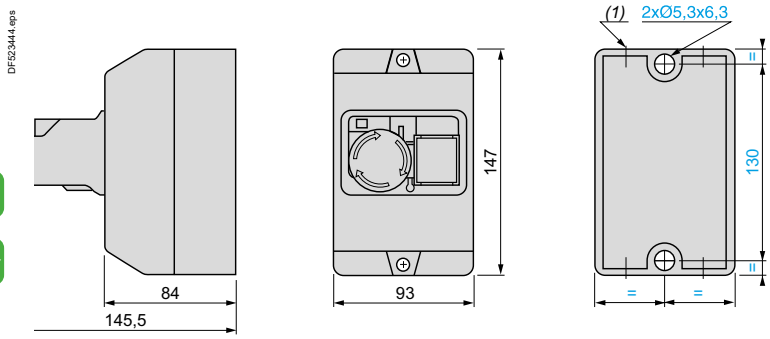

(1) Top face: 2 knock-outs for ISO20/25 cable glands or Pg16 or 16mm conduits.
Bottom face: 2 knock-outs for ISO20/25 cable glands or Pg16 or 16mm conduits.

Mounting

Flush mounting enclosures GV2MP0● (panel cut-out)

GV2MP0● **GV2MP01, MP02** **GV2MP03, MP04** **Front plate GV2CP21**

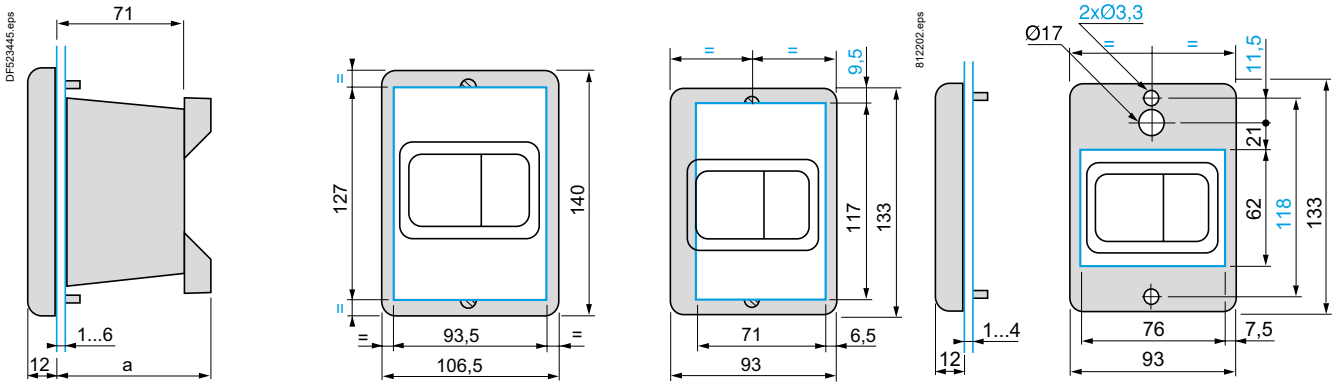

GV2	a
MP01, MP02	–
MP03, MP04	86

References:
pages A1/11 and A1/23

Schemes:
page A1/45

Life Is On Schneider Electric

Schemes

GV2ME●●

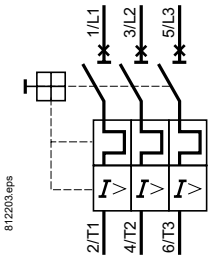

Instantaneous auxiliary contacts

GVAE1

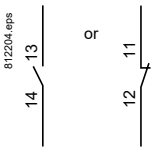

GVAE11

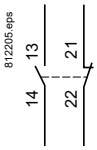

GVAE20

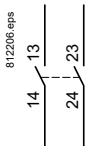

Instantaneous auxiliary contacts and fault signalling contacts

GVAD0110

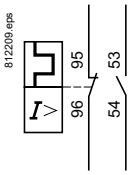

GVAD0101

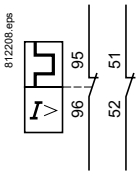

GVAD1010

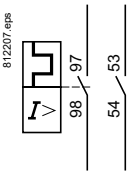

GVAD1001

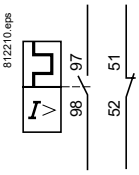

Instantaneous auxiliary contacts

GVAN11

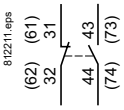

GVAN20

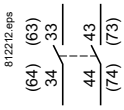

Short-circuit signalling contacts

GVAM11

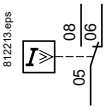

Undervoltage trips

GVAU●●●

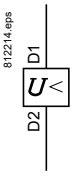

GVAS●●●

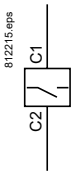

GVAX●●●

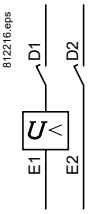

Wiring diagram for undervoltage trip used on potentially dangerous machines, conforming to INRS

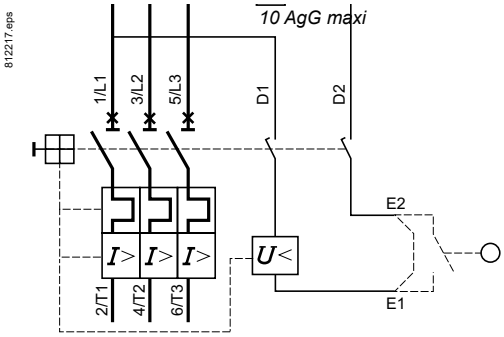

References:
pages A1/11 and A1/23

Dimensions:
page A1/44

Dimensions

LE1D09 and D12

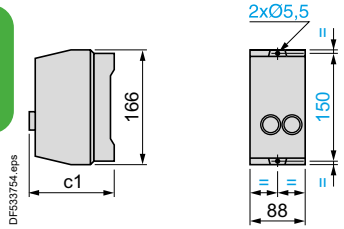

	c1
Standard version	128.5
Variant A04	120
Variant A05	128.5
Variant A09	120
Variant A13	120

LE1D09●●T
LE1D18…D35 and LE2D09…D35

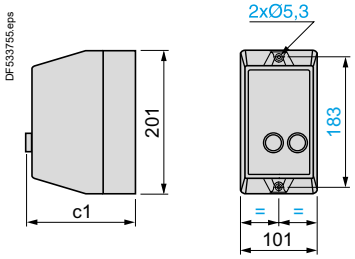

	c1	
	LE1D	LE2D
Standard version	153.5	160
Variant A04	145	145
Variant A05	153.5	153.5
Variant A09	160	–
Variant A13	160	–

LE1D40A…D65A
LE2D40A…D65A

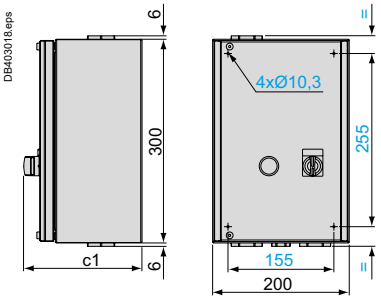

	c1	
	LE1D	LE2D
Standard version	158.5	174
Variant A04	150	150
Variant A05	158.5	158.5

LE2K06 and K09

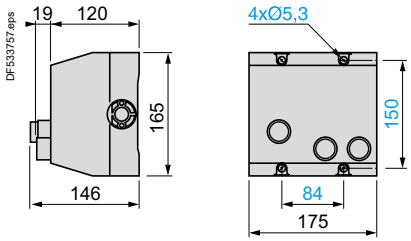

Knock-outs or blanking plugs for cable glands

Type of enclosure	At top		At bottom	
	PG	ISO	PG	ISO
LE1D09 and D12	–	2 x 20	–	2 x 20
LE1D18…D35 and LE2D09…D35	–	2 x 20 or 2 x 25	–	2 x 20 or 2 x 25
LE1 and LE2D40A…D65A	–	1 x 32	–	1 x 20 and 2 x 32
LE2K06 and K09	2 x 13 and 2 x 16	4 x 20	2 x 13 and 2 x 16	4 x 20

References:
pages A1/8, A1/13 and A1/28
Schemes:
page A1/47

Schemes

LE1D09…D65A

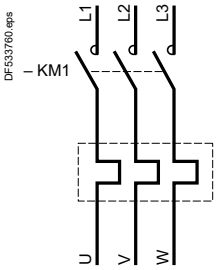

LE1D09…D65A

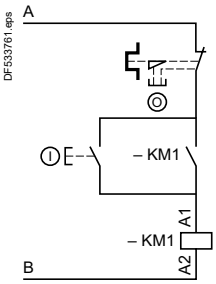

LE1D09…D65A with variant A04 or A05

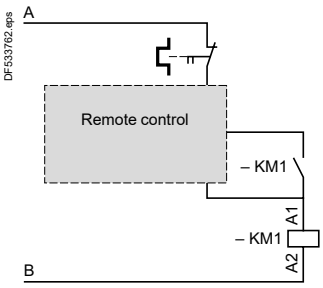

LE2K06, K09

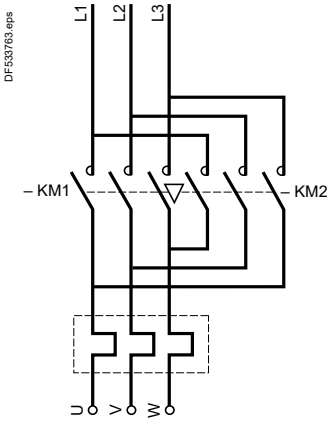

LE2K06, K09

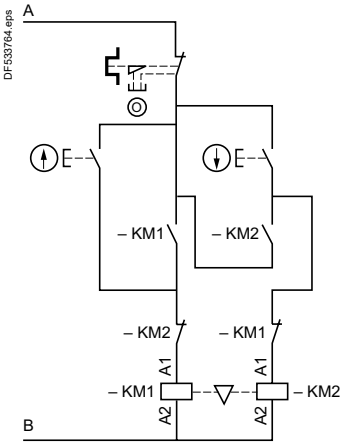

LE2D09…D65A

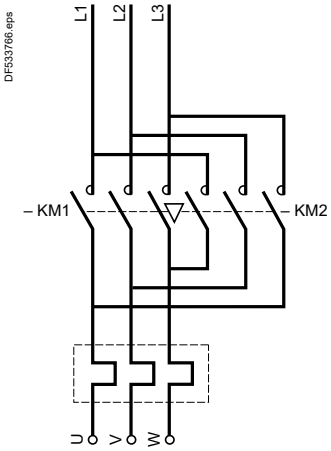

LE2D09…D65A

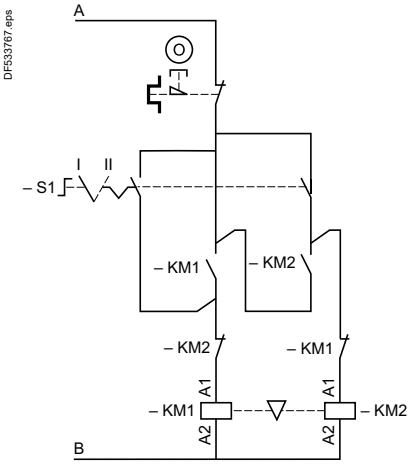

LE2D40A…D65A with variants A04 or A05

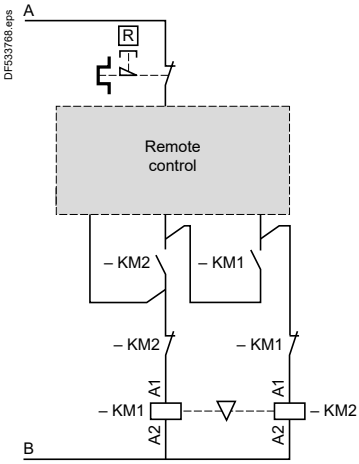

LE1D09…D65A, LE2D09…D65A Connections

Power voltage	Control circuit voltage	A	B
380 V, 400 V, 415 V, 440 V	220 V, 230 V, 240 V	L3	Neutral terminal
	380 V, 400 V, 415 V, 440 V	L3	L1
	Other voltages	Terminal 1	Terminal 2
Other voltages	Other voltages (600 V max)	For customer assembly	

LE2K06, K09 Connections

Power voltage	Control circuit voltage	A	B
380 V, 400 V, 415 V	220 V, 230 V, 240 V	L3	Neutral
	380 V, 400 V, 415 V	L3	L1
Other voltages	Other voltages (440 V max)	For customer assembly	

References:
pages A1/8 and A1/13

Dimensions:
page A1/46

Dimensions

Dimensions

LE4K06 and K09, LE8K06 and K09

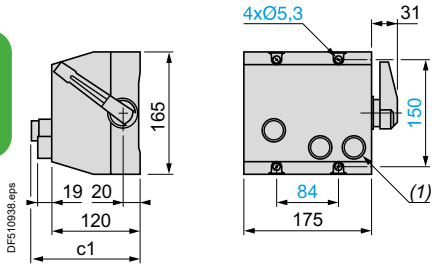

LE4D09…D35, LE8D09…D35

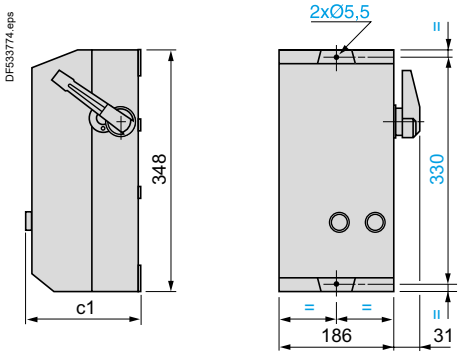

	c1	
	LE4K	LE8K
Standard version	146	146
Variant A05	–	139

(1) For LE8 only.

	c1	
	LE4D	LE8D
Standard version	175.5	182
Variant A04	167	167
Variant A05	175.5	175.5

Knock-outs or blanking plugs for cable glands

Type of enclosure	At top		At bottom	
	PG	ISO	PG	ISO
LE4 and LE8D09…D35	–	2 x 20 or 2 x 25 or 2 x 32 or 2 x 40	–	2 x 20 or 2 x 25 or 2 x 32 or 2 x 40
LE4 and LE8K06 and K09	2 x 13 and 2 x 16	4 x 20	2 x 13 and 2 x 16	4 x 20

References:
pages A1/12 and A1/14

Schemes:
page A1/49

Life Is On Schneider Electric

Schemes

Schemes

LE4K06, K09 LE4D09…D35

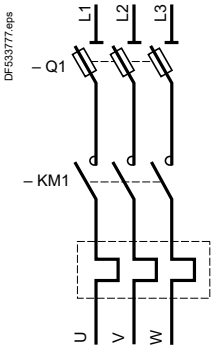

LE4K06, K09

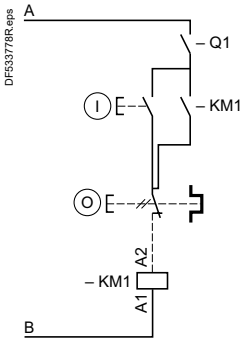

LE4D09…D35

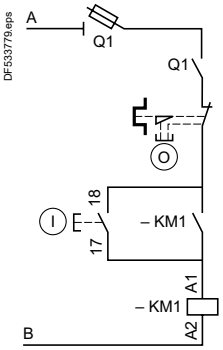

LE4D09…D35 with variant A04 or A05

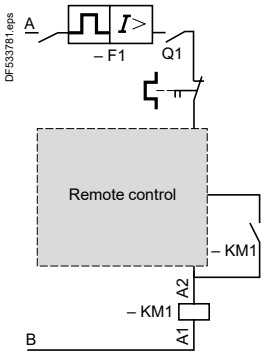

LE8K06, K09 LE8D09…D35

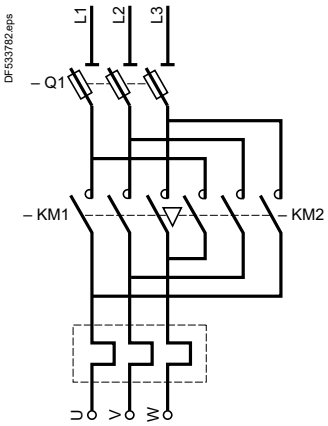

LE8K06, K09

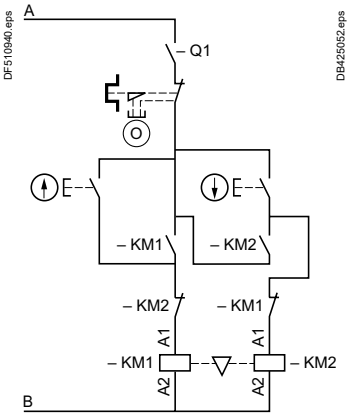

LE8D09...D35

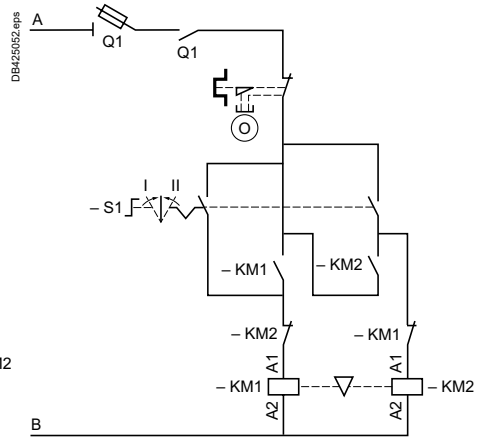

LE4D09 and D12, LE8D09 and D12 Connections

Power voltage	Control circuit voltage	A	B
380 V, 400 V, 415 V, 440 V	220 V, 230 V, 240 V	L3	Neutral
	380 V, 400 V, 415 V, 440 V	L3	L1
	Other voltages	Terminal 1	Terminal 2
Other voltages	Other voltages (600 V max)	For customer assembly	

LE4D18…D35, LE8D18…D35 Connections

Power voltage	Control circuit voltage	A	B
380 V, 400 V, 415 V, 440 V	220 V, 230 V, 240 V	L3	Neutral terminal
	380 V, 400 V, 415 V, 440 V	L3	L1
	Other voltages	Terminal 1	Terminal 2
Other voltages	Other voltages (600 V max)	For customer assembly	

LE4K06, K09, LE8K06, K09 Connections

Power voltage	Control circuit voltage	A	B
380 V, 400 V, 415 V	220 V, 230 V, 240 V	L3	Neutral
	380 V, 400 V, 415 V	L3	L1
Other voltages	Other voltages (440 V max)	For customer assembly	

References:
pages A1/12 and A1/14

Dimensions:
page A1/48

Dimensions

LE3D09…D35

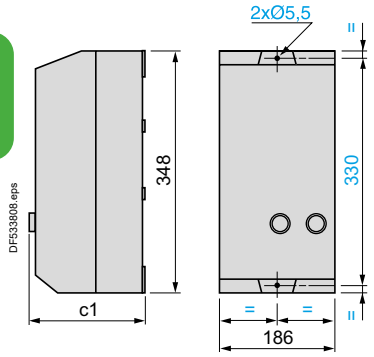

	c1
Standard version	175.5
Variant A04	167
Variant A05	175.5

Knock-outs or blanking plugs for cable glands

Type of enclosure	At top		At bottom	
	PG	ISO	PG	ISO
LE3D09…D35	–	2 x 20 or 2 x 25 or 2 x 32 or 2 x 40	–	2 x 20 or 2 x 25 or 2 x 32 or 2 x 40

Schemes

LE3D09…D35

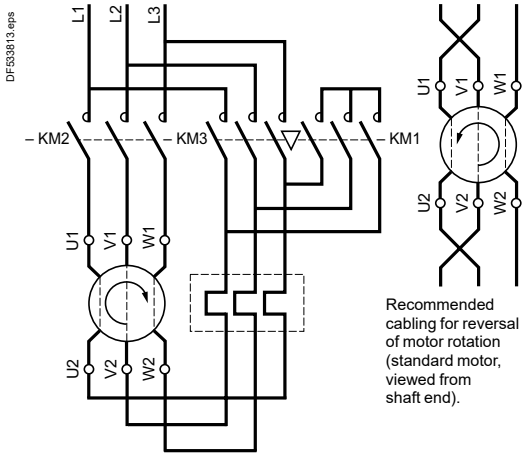

LE3D09…D35

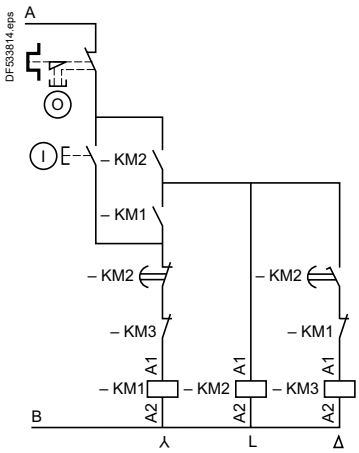

Note: in accordance with current installation regulations, short-circuit protection must be provided by fuses or a circuit breaker.

Connections

Power voltage	Control circuit voltage	A	B
380 V, 400 V, 415 V, 440 V	220 V, 230 V, 240 V	L3	Neutral terminal
	380 V, 400 V, 415 V, 440 V	L3	L1
	Other voltages	Terminal 1	Terminal 2
Other voltages	All voltages (600 V max)	For customer assembly	

References:
page A1/15

Life Is On Schneider Electric

Dimensions, schemes

Dimensions

LE1GVMEK

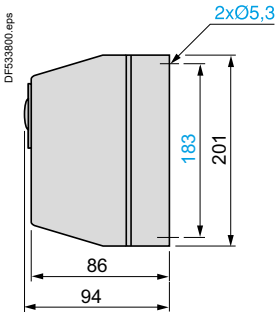

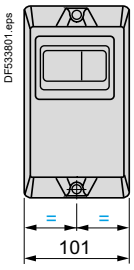

Knock-outs or blanking plugs for cable glands

Enclosure type	At top	At bottom
	ISO	ISO
LE1GV	2 x 20 or 2 x 25	2 x 20 or 2 x 25

Schemes

LE1GVMEK

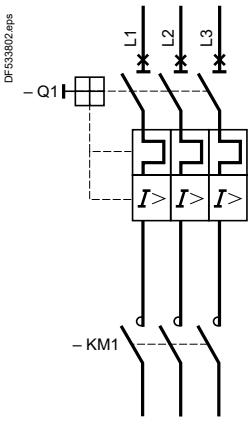

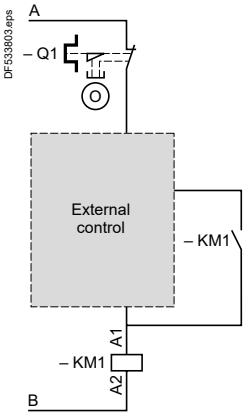

Connections

Power voltage	Control circuit voltage	A	B
380 V, 400 V, 415 V, 440 V	220 V, 230 V, 240 V	L3	Neutral
	380 V, 400 V, 415 V, 440 V	L3	L1
	Other voltages	For customer assembly	
Other voltages	All voltages (440 V max)	For customer assembly	

References:
page A1/27

Dimensions

Dimensions

LG1K06, K09
LG1D12, D18

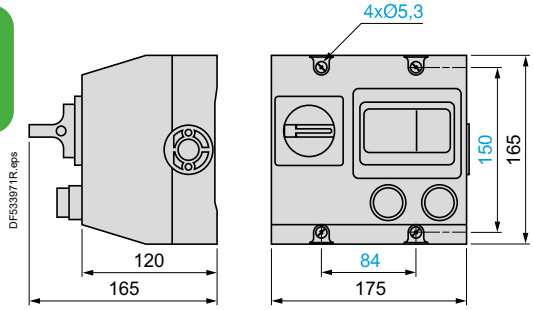

LG7K06, K09, LG7D12, D18
LG8K06, K09, K12

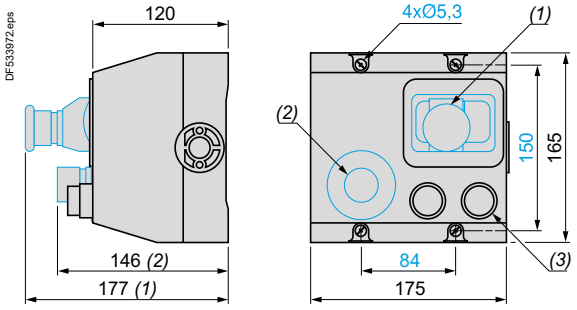

(1) Emergency Stop for starters LG●K06.
(2) Emergency Stop for starters LG●K09, K12, D12 et D18.
(3) Only for LG7.

Knock-outs or blanking plugs for cable glands

Type of enclosure	At top	At bottom
LG1K and LG1D	2 x 13 P and 2 x 16 P	2 x 13 P and 2 x 16 P
LG7K and LG7D	2 x 13 P and 2 x 16 P	2 x 13 P and 2 x 16 P
LG8K	2 x 13 P and 2 x 16 P	2 x 13 P and 2 x 16 P

References:
pages A1/18, A1/19 and A1/21

Schemes:
page A1/53

Life Is On Schneider Electric

Schemes

LG1K06, K09, D12, D18

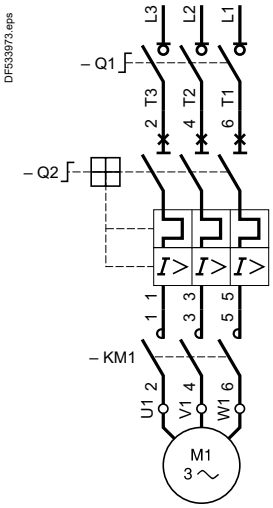

LG1K06, K09, D12, D18

380/400 V, code Q7 or 400/415 V, code N7
220/230 V, code M7

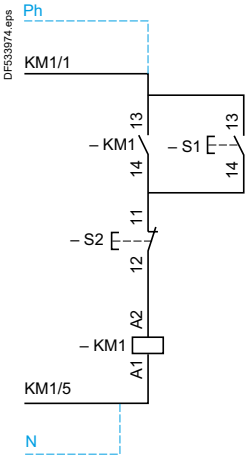

LG7K06

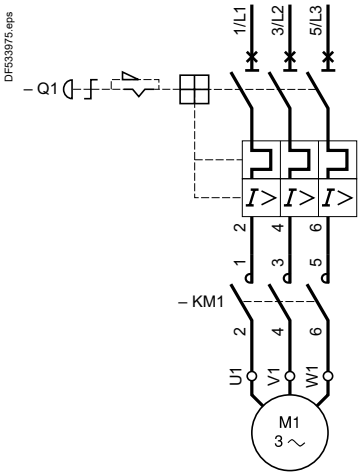

LG7K09, D12, D18

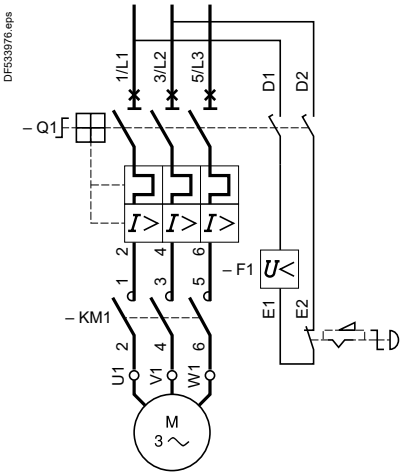

LG7K06, K09, D12, D18

380/400 V, code Q7 or
400/415 V, code N7
220/230 V, code M7

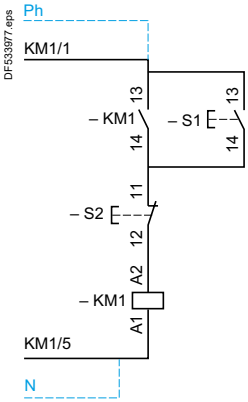

LG8K06

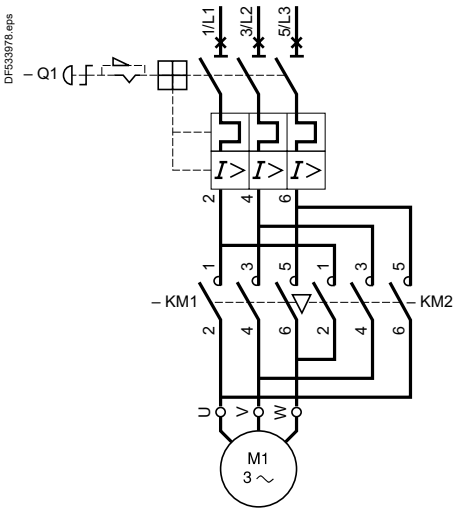

LG8K09, K12

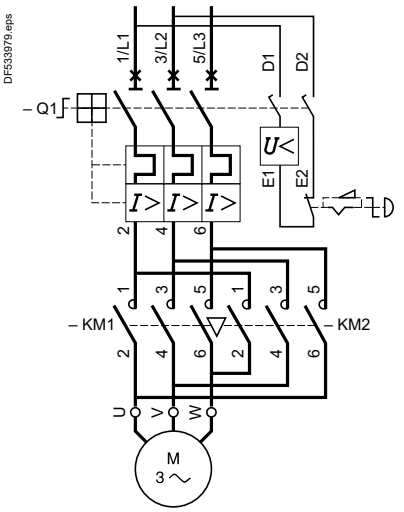

LG8K06, K09, K12

380/400 V, code Q7 or
400/415 V, code N7
220/230 V, code M7

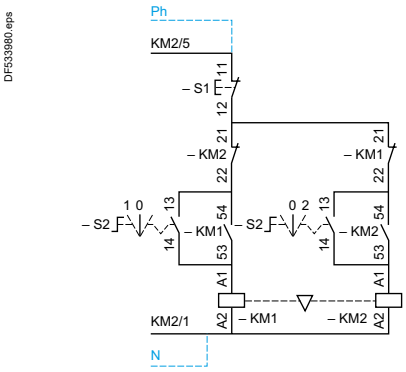

References:
pages A1/18, A1/19 and A1/21

Dimensions:
page A1/52

Dimensions

LJ7K06, LJ8K06

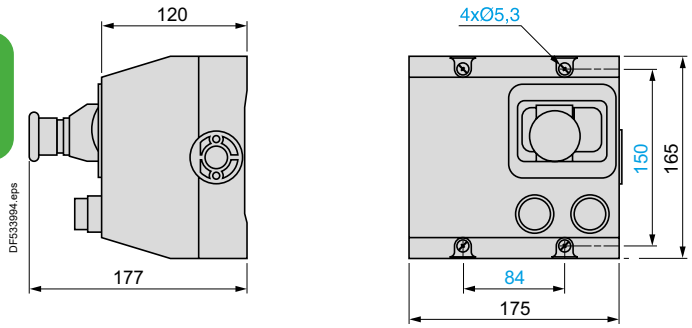

LJ7K09, LJ8K09

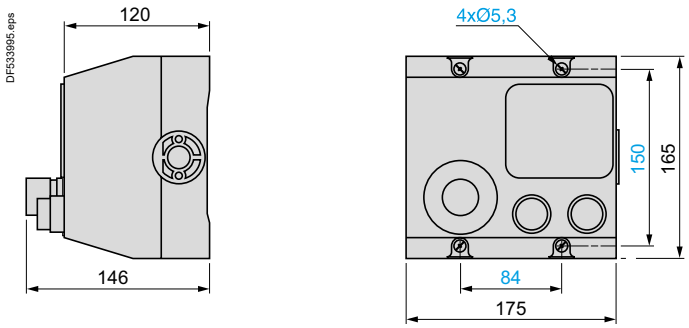

Cut-outs or blanking plugs for cable glands at the top and at the bottom 2 x 13 P and 2 x 16 P.

References:
pages A1/20 and A1/22

Schemes:
page A1/55

Life Is On Schneider Electric

Schemes

LJ7K06

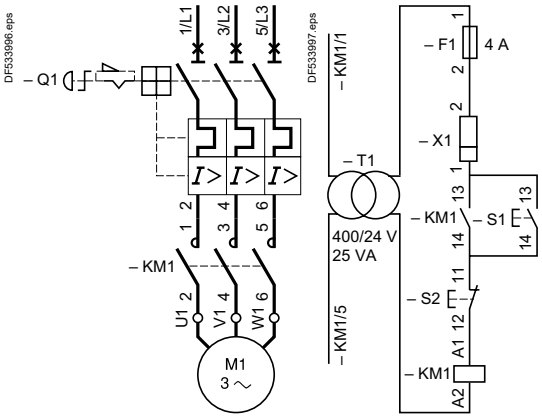

LJ7K09

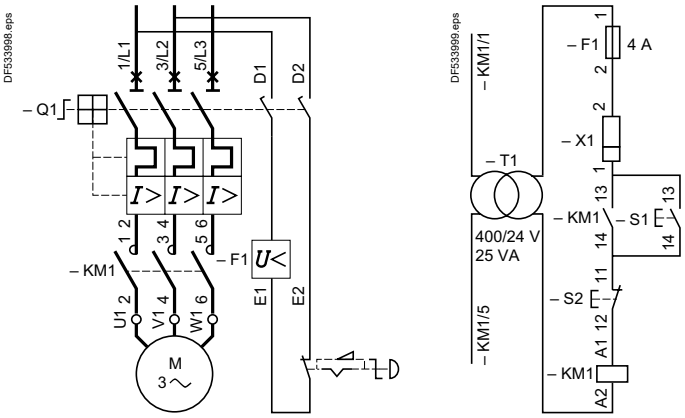

LJ8K06

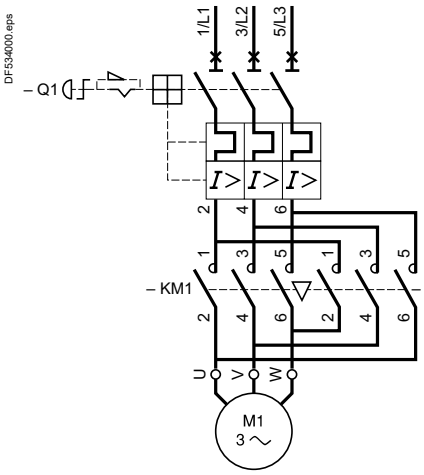

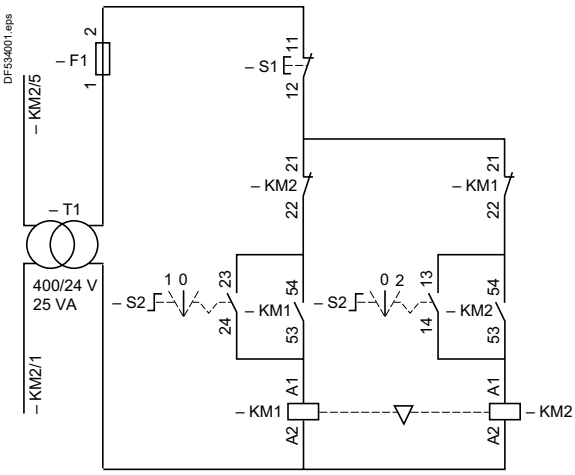

LJ8K09

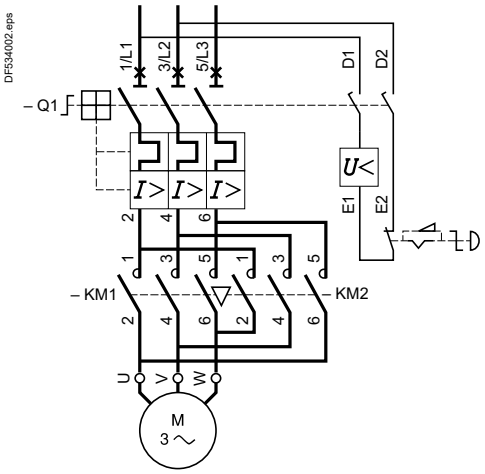

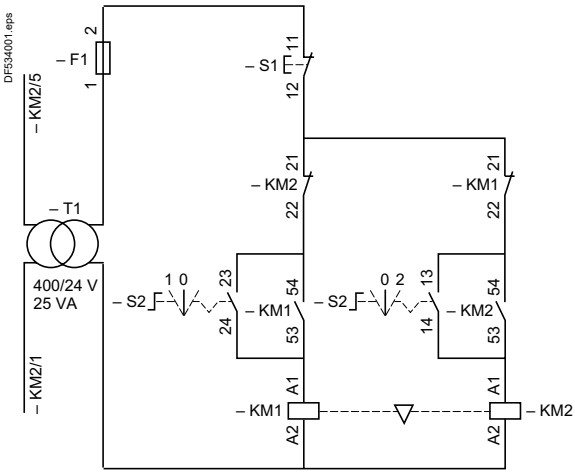

References:
pages A1/20 and A1/22

Dimensions:
page A1/54

Life Is On Schneider Electric

TeSys Control
Open, pre-cabled motor starters

Direct-on-line and reversing starters

Composition	Range		Page
Motor circuit breaker + contactor (direct-on-line) Coordination type 1	Up to 5.5 kW		A2/2
Motor circuit breaker + 2 contactors (reversing) Coordination type 1	Up to 5.5 kW		A2/3
Motor circuit breaker + contactor (direct-on-line) Coordination type 1	Up to 18.5 kW		A2/4
Motor circuit breaker + 2 contactors (reversing) Coordination type 1	Up to 18.5 kW		A2/5
Motor circuit breaker + contactor (direct-on-line) Coordination type 2 to be assembled by customer	Up to 37 kW		A2/6
Motor circuit breaker + 2 contactors (reversing) Coordination type 2 to be assembled by customer	Up to 37 kW		A2/7

Star-delta starters

3 contactors + 1 time delay aux. block	Up to 132 kW		A2/8

Star-delta starters for customer assembly

Separated components and mounting kits for suggested motor starter components combinations - on plate or mounting rail	Up to 132 kW		A2/10
Separated components for suggested motor starter combinations - on chassis	Up to 315 kW	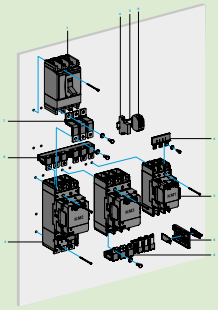	A2/14

D.O.L. starters, non-reversing, from 0.37 to 5.5 kW at 400/415, 440 and 500 V, type 1 coordination

This pre-assembled combination comprises:
- 1 motor circuit breaker GV2ME,
- 1 3-pole contactor LC1K,
- 1 combination block GV2AF01.

Characteristics

Starter type		GV2		ME06K1	ME07K1	ME08K1	ME10K1	ME14K1
Breaking capacity (Iq) [1]	Conforming to IEC 60947-4-1	400/415 V	**kA**	50	50	50	50	50
		440 V	**kA**	50	50	50	50	15
		500 V	**kA**	50	50	50	50	10 (4 kW) 6 (5.5 kW)

References

PB123801.tif

GV2ME08K1●●

D.O.L. starters, non-reversing

Standard power ratings of 3-phase motors 50/60 Hz in AC-3e			Setting range of thermal trips	Fixed magnetic tripping current 13 Irth	For customer assembly		Pre-assembled	Weight
400/415 V	440 V	500 V			Motor circuit-breaker Reference	Contactor Reference to be completed [2]	Basic reference, to be completed by adding the voltage code [3]	
kW	kW	kW	A	A				kg
0.37 0.55 –	0.37 0.55 –	0.37 0.55 0.75	1…1.6	22.5	GV2ME06	LC1K06	**GV2ME06K1●●**	0.460
0.75 –	0.75 –	– 1.1	1.6…2.5	33.5	GV2ME07	LC1K06	**GV2ME07K1●●**	0.460
1.1 1.5	1.1 1.5	1.5 2.2	2.5…4	51	GV2ME08	LC1K06	**GV2ME08K1●●**	0.460
2.2 –	2.2 –	– 3	4…6.3	78	GV2ME10	LC1K06	**GV2ME10K1●●**	0.460
–	3	–	6…10	138	GV2ME14	LC1K06		
3 4	– 4	4 5.5	6…10	138	GV2ME14	LC1K09	**GV2ME14K1●●**	0.460

Add-on blocks

Description	Sold in lots of	Unit reference
Combination block between circuit breaker and contactor	10	**GV2AF01**

*(1) The breaking performance of circuit breakers **GV2ME** can be increased by adding a current limiter **GV1L3**, see page B6/21.*

(2) Please consult your Regional Sales Office.

(3) Please check the availability of your variant in the index page A2/16. The SEARCH function of your viewer can be used.

Volts	24	110	220/230	230	230/240	380/400
∼ 50/60 Hz	B7	F7	M7	P7	U7	Q7
⎓ [4]	BW3	–	–	–	–	–

(4) Coil: low consumption (1.5 W), wide range (0.7…1.3 Uc) with integral suppression device as standard.

Dimensions:
page A2/18

Schemes:
page A2/20

Life Is On Schneider Electric

D.O.L. starters, reversing, from 0.37 to 5.5 kW at 400/415, 440 and 500 V, type 1 coordination

This pre-assembled combination comprises:
- 1 motor circuit breaker GV2ME,
- 1 3-pole reversing contactor LC2K,
- 1 combination block GV2AF01.

Characteristics

Starter type		GV2		ME06K2	ME07K2	ME08K2	ME10K2	ME14K2
Breaking capacity (Iq) [1]	Conforming to IEC 60947-4-1	400/415 V	**kA**	50	50	50	50	50
		440 V	**kA**	50	50	50	50	15
		500 V	**kA**	50	50	50	50	10 (4 kW) 6 (5.5 kW)

References

GV2ME06K2●●

D.O.L. starters, reversing

Standard power ratings of 3-phase motors 50/60 Hz in AC-3e			Setting range of thermal trips	Fixed magnetic tripping current 13 Irth	For customer assembly		Pre-assembled	Weight
400/415 V	440 V	500 V			Motor circuit-breaker Reference	Contactor Reference to be completed [2]	Basic reference, to be completed by adding the voltage code [3]	
kW	kW	kW	A	A				kg
0.37 0.55 –	0.37 0.55 –	0.37 0.55 0.75	1…1.6	22.5	GV2ME06	LC2K06	**GV2ME06K2●●**	0.460
0.75 –	0.75 –	– 1.1	1.6…2.5	33.5	GV2ME07	LC2K06	**GV2ME07K2●●**	0.460
1.1 1.5	1.1 1.5	1.5 2.2	2.5…4	51	GV2ME08	LC2K06	**GV2ME08K2●●**	0.460
2.2 –	2.2 –	– 3	4…6.3	78	GV2ME10	LC2K06	**GV2ME10K2●●**	0.460
–	3	–	6…10	138	GV2ME14	LC2K06		
3 4	– 4	4 5.5	6…10	138	GV2ME14	LC2K09	**GV2ME14K2●●**	0.460

Add-on blocks

Description	Sold in lots of	Unit reference
Combination block between circuit breaker and contactor	10	**GV2AF01**

*(1) The breaking performance of circuit breakers **GV2ME** can be increased by adding a current limiter **GV1L3**, see page B6/21.*

(2) Please consult your Regional Sales Office.

*(3) **Please check the availability of your variant in the index page A2/16. The SEARCH function of your viewer can be used.***

Volts	24	110	220/230	230	230/240	380/400
∼ 50/60 Hz	B7	F7	M7	P7	U7	Q7
⎓ [4]	BW3	–	–	–	–	–

(4) Coil: low consumption (1.5 W), wide range (0.7…1.3 Uc) with integral suppression device as standard.

***Note:** If the maximum starting current of the motor is less than 7.5 motor rated current, you have one more choice to refer to the AC-3 Coordination Tables pages A5/58 and A5/59.*

Open motor starters

Dimensions:
page A2/18

Schemes:
page A2/20

D.O.L. starters, non-reversing, from 0.06 to 18.5 kW at 400/415, 440 and 500 V, type 1 coordination

This pre-assembled combination comprises:
- 1 motor circuit breaker GV2ME,
- 1 3-pole contactor LC1D,
- 1 combination block GV2AF3.

Characteristics

Starter type		GV2		DM102 to DM110	DM114	DM116	DM132
Breaking capacity (Iq) (1)	Conforming to IEC 60947-4-1	400/415 V	**kA**	50	50	15	10
		440 V	**kA**	50	15	8	6
		500 V	**kA**	50	6	6	4

References

PB121676.eps

GV2DM102●●

D.O.L. starters, non-reversing

Standard power ratings of 3-phase motors 50/60 Hz in AC-3e			Setting range of thermal trips	Fixed magnetic tripping current 13 Irth	For customer assembly		Pre-assembled	Weight
400/415 V	440 V	500 V			Motor circuit-breaker Reference	Contactor Reference to be completed (2)	Basic reference, to be completed by adding the voltage code (2) (3)	
kW	kW	kW	A	A				kg
0.06	0.06	–	0.16…0.25	2.4	GV2ME02	LC1D09●●	**GV2DM102●●** (4)	0.596
0.75 –	0.75 –	– 1.1	1.6…2.5	33.5	GV2ME07	LC1D09●●	**GV2DM107●●** (4)	0.596
1.1 1.5	1.1 1.5	1.5 2.2	2.5…4	51	GV2ME08	LC1D09●●	**GV2DM108●●** (4)	0.596
2.2 –	2.2 –	– 3	4…6.3	78	GV2ME10	LC1D09●●	**GV2DM110●●** (4)	0.596
3 4	3 4	4 5.5	6…10	138	GV2ME14	LC1D09●●	**GV2DM114●●** (4)	0.596
5.5	5.5	7.5	9…14	170	GV2ME16	LC1D12●●	**GV2DM116●●**	0.601
15	15	18.5	24…32	416	GV2ME32	LC1D32●●	**GV2DM132●●**	0.651

Add-on blocks

Description	Mounting of GV2	Sold in lots of	Unit reference
Combination block between circuit breaker and contactor	⊥r rail	10	**GV2AF3**
	Mounting plate LAD311	10	**GV2AF4**

*(1) The breaking performance of circuit breakers **GV2ME** can be increased by adding a current limiter **GV1L3**, see page B6/21.*

(2) Standard control circuit voltages (for other voltages, please consult your Regional Sales Office):

Volts	24	220	230
∼ 50/60 Hz	B7	M7	P7
⎓ (5)	BD	–	–

(3) Please check the availability of your variant in the index page A2/16. The SEARCH function of your viewer can be used.

(4) Type 2 coordination also possible, see page A5/59.

*(5) Only available for **GV2DM**. Coil with integral suppression device as standard.*

Note: If the maximum starting current of the motor is less than 7.5 motor rated current, you have one more choice to refer to the AC-3 Coordination Tables pages A5/58 and A5/59.

Dimensions:
page A2/18

Schemes:
page A2/20

Life Is On Schneider Electric

D.O.L. starters, reversing, from 0.12 to 18.5 kW at 400/415, 440 and 500 V, type 1 coordination

This pre-assembled combination comprises:
- 1 motor circuit breaker GV2 ME,
- 1 3-pole reversing contactor LC2 D,
- 1 combination block GV2AF3.

Characteristics

Starter type		GV2		DM202 to DM210	DM214	DM216	DM220	DM221	DM222	DM232
Breaking capacity (Iq) (1)	Conforming to IEC 60947-4-1	400/415 V	**kA**	50	50	15	15	15	15	10
		440 V	**kA**	50	15	8	8	6	6	6
		500 V	**kA**	50	10	6	6	4	4	4

References

PB121683.eps

GV2DM202●●

D.O.L. starters, reversing (2)

Standard power ratings of 3-phase motors 50/60 Hz in AC-3e			Setting range of thermal trips	Fixed magnetic tripping current 13 Irth	For customer assembly		Pre-assembled	Weight
400/415V	440 V	500 V			Motor circuit-breaker Reference	Contactor Reference to be completed (3)	Basic reference, to be completed by adding the voltage code (4) (5)	
kW	kW	kW	A	A				kg
0.12 – –	– 0.18 –	– – –	0.40…0.63	8	GV2ME04	LC2D09●●	**GV2DM204●●**	0.963
0.18 0.25	0.25 –	– –	0.63…1	13	GV2ME05	LC2D09●●	**GV2DM205●●**	0.963
0.37 0.55 –	0.37 0.55 –	0.37 0.55 0.75	1…1.6	22.5	GV2ME06	LC2D09●●	**GV2DM206●●**	0.963
1.1 1.5	– 1.5	1.5 2.2	2.5…4	51	GV2ME08	LC2D09●●	**GV2DM208●●**	0.963
9	11	11	17…23	327	GV2ME21	LC2D25●●	**GV2DM221●●**	1.063
15	15	18.5	24…32	416	GV2ME32	LC2D32●●	**GV2DM232●●**	1.073

Add-on blocks

Description	Mounting of GV2	Sold in lots of	Unit reference
Combination block between circuit breaker and contactor	⊥r rail	10	**GV2AF3**
	Mounting plate LAD311	10	**GV2AF4**

*(1) The breaking performance of circuit breakers **GV2ME** can be increased by adding a current limiter **GV1L3**, see page B6/21.*
(2) Type 2 coordination also possible, see page A5/59.
(3) See page B8/23.
(4) Standard control circuit voltages (for other voltages, please consult your Regional Sales Office):

Volts	24	220	230
∼ 50/60 Hz	B7	M7	P7
⎓ (6)	BD	–	–

(5) Please check the availability of your variant in the index page A2/16. The SEARCH function of your viewer can be used.
(6) Coil with integral suppression device as standard.

Note: If the maximum starting current of the motor is less than 7.5 motor rated current, you have one more choice to refer to the AC-3 Coordination Tables pages A5/58 and A5/59.

Open motor starters

Dimensions:
page A2/18

Schemes:
page A2/20

D.O.L. starters, non-reversing, from 0.06 to 37 kW at 400/415, 440 and 500 V, type 2 coordination

To be assembled by customer, using:
- 1 motor circuit breaker GV2P,
- 1 3-pole contactor LC1D,
- 1 combination block GV2AF3.

Characteristics

Starter type		GV2		P02 to P10	P14	P16	P20	P21	P22	P32
Breaking capacity (Iq) (1)	Conforming to IEC 60947-4-1	400/415 V	**kA**	130	130	130	50	50	50	50
		440 V	**kA**	130	130	50	20	20	20	20
		500 V	**kA**	130	50	42	10	10	10	10

References

PB121702.tif

GV2P●● + LC1D09●● + GV2AF3

PB121675.eps

PB121684.eps

GV3P651 + LC1D65A●●

D.O.L. starters, non-reversing

Standard power ratings of 3-phase motors 50/60 Hz in AC-3e			Setting range of thermal trips	Fixed magnetic tripping current 13 Irth	For customer assembly		Weight
400/415 V	440 V	500 V			Motor circuit-breaker Reference	Contactor Reference to be completed (2)	
kW	kW	kW	A	A			kg
0.06	0.06	–	0.16…0.25	2.4	GV2P02	LC1D09●●	0.686
– 0.09	0.09 –	–	0.25…0.40	5	GV2P03	LC1D09●●	0.686
0.12 –	0.12 0.18	– –	0.40…0.63	8	GV2P04	LC1D09●●	0.686
0.18 0.25	0.25 –	– –	0.63…1	13	GV2P05	LC1D09●●	0.686
0.37 0.55 –	0.37 0.55 –	0.37 0.55 0.75	1…1.6	22.5	GV2P06	LC1D09●●	0.686
0.75 –	0.75 –	– 1.1	1.6…2.5	33.5	GV2P07	LC1D09●●	0.686
1.1 1.5	1.1 1.5	1.5 2.2	2.5…4	51	GV2P08	LC1D09●●	0.696
2.2 –	2.2 –	– 3	4…6.3	78	GV2P10	LC1D09●●	0.736
3 4	3 4	4 5.5	6…10	138	GV2P14	LC1D09●●	0.736
5.5 –	5.5 7.5	7.5 9	9…14	170	GV2P16	LC1D25●●	0.741
7.5	9	–	13…18	223	GV2P20	LC1D25●●	0.736
9	11	11	17…23	327	GV2P21	LC1D25●●	0.741
11	–	15	20…25	327	GV2P22	LC1D25●●	0.741
15	15	18.5	24…32	416	GV2P32	LC1D32●●	0.741
18.5	–	–	30…40	560	GV3P401 (4)	LC1D50A●●	1.725
–	18.5	22	30…40	560	GV3P401 (4)	LC1D65A●●	1.730
22	–	–	37…50	700	GV3P501 (4)	LC1D50A●●	1.725
–	22	30	37…50	700	GV3P501 (4)	LC1D65A●●	1.730
30	37	–	48…65	910	GV3P651 (4)	LC1D65A●●	1.730

Add-on blocks

Description	Mounting of GV2	Sold in lots of	Unit reference
Combination block between circuit breaker and contactor	⊔ rail	10	**GV2AF3**

*(1) The breaking performance of circuit breakers **GV2P** can be increased by adding a current limiter **GV1L3**, see page B6/11.*
(2) See page B8/23.
(3) Please check the availability of your variant in the index page A2/16. The SEARCH function of your viewer can be used.
*(4) Circuit breaker supplied without downstream **Ever**Link® power terminal block, which is required for vertical mounting. For side by side mounting, use a **GV3P** circuit breaker with terminal blocks and the **GV3S** set of S-shape busbars (see page B8/45).*

Note: If the maximum starting current of the motor is less than 7.5 motor rated current, you have one more choice to refer to the AC-3 Coordination Table page A5/59.

Dimensions:
pages A2/18 and A2/19

Schemes:
page A2/21

Life Is On Schneider Electric

D.O.L. starters, reversing, from 0.06 to 37 kW at 400/415, 440 and 500 V, type 2 coordination

To be assembled by customer, using:
- 1 motor circuit breaker GV2P,
- 1 3-pole reversing contactor LC2D,
- 1 combination block GV2AF3.

Characteristics

Starter type		GV2		P02 to P10	P14	P16	P20	P21	P22	P32
Breaking capacity (Iq) (1)	Conforming to IEC 60947-4-1	400/415 V	**kA**	130	130	130	50	50	50	50
		440 V	**kA**	130	130	50	20	20	20	20
		500 V	**kA**	130	50	42	10	10	10	10

References

PB121701.eps

GV2P●● + LC2D09●● + GV2AF3

PB121675.eps

PB121685.eps

GV3P651 + LC2D65A●●

D.O.L. starters, reversing

Standard power ratings of 3-phase motors 50/60 Hz in AC-3e 400/ 415 V	440 V	500 V	Setting range of thermal trips	Fixed magnetic tripping current 13 Irth	For customer assembly: Motor circuit-breaker Reference	Contactor Reference to be completed (2)	Weight
kW	kW	kW	A	A			kg
0.06	0.06	–	0.16…0.25	2.4	GV2P02	LC2D09●●	1.053
– 0.09	0.09 –	–	0.25…0.40	5	GV2P03	LC2D09●●	1.053
0.12 –	0.12 0.18	– –	0.40…0.63	8	GV2P04	LC2D09●●	1.053
0.18 0.25	0.25 –	– –	0.63…1	13	GV2P05	LC2D09●●	1.053
0.37 0.55 –	0.37 0.55 –	0.37 0.55 0.75	1…1.6	22.5	GV2P06	LC2D09●●	1.053
0.75 –	0.75 –	– 1.1	1.6…2.5	33.5	GV2P07	LC2D09●●	1.053
1.1 1.5	1.1 1.5	1.5 2.2	2.5…4	51	GV2P08	LC2D09●●	1.073
2.2 –	2.2 –	– 3	4…6.3	78	GV2P10	LC2D09●●	1.153
3 4	3 4	4 5.5	6…10	138	GV2P14	LC2D09●●	1.153
5.5 –	5.5 7.5	7.5 9	9…14	170	GV2P16	LC2D25●●	1.163
7.5	9	–	13…18	223	GV2P20	LC2D25●●	1.153
9	11	11	17…23	327	GV2P21	LC2D25●●	1.163
11	–	15	20…25	327	GV2P22	LC2D25●●	1.163
15	15	18.5	24…32	416	GV2P32	LC2D32●●	1.163
18.5	–	–	30…40	560	GV3P401 (4)	LC2D50A●●	2.750
–	18.5	22	30…40	560	GV3P401 (4)	LC2D65A●●	2.760
22	–	–	37…50	700	GV3P501 (4)	LC2D50A●●	2.750
–	22	30	37…50	700	GV3P501 (4)	LC2D65A●●	2.760
30	37	–	48…65	910	GV3P651 (4)	LC2D65A●●	2.760

Add-on blocks

Description	Mounting of GV2	Sold in lots of	Unit reference
Combination block between circuit breaker and contactor	⊔ rail	10	**GV2AF3**

*(1) The breaking performance of circuit breakers **GV2P** can be increased by adding a current limiter **GV1L3**, see page B6/11.*

(2) See page B8/30.

(3) Please check the availability of your variant in the index page A2/16. The SEARCH function of your viewer can be used.

*(4) Circuit breaker supplied without downstream **Ever**Link® power terminal block, which is required for vertical mounting. For side by side mounting, use a **GV3P** circuit breaker with terminal blocks and the **GV3S** set of S-shape busbars (see page B8/45)*

***Note:** If the maximum starting current of the motor is less than 7.5 motor rated current, you have one more choice to refer to the AC-3 Coordination Table page A5/59.*

Open motor starters

Dimensions:
pages A2/18 and A2/19

Schemes:
page A2/21

PB123808.eps

LC3D32A●●

Plate mounted starters without isolating device

Maximum operating rate: 30 starts/hour. Maximum starting time: 30 seconds.

Standard power ratings of squirrel cage motors Mains voltage - delta connection				Auxiliary contacts available on each contactor						Star delta mechanical interlock	Basic reference, to be completed by adding the voltage code [2] [3]	Weight
				line		delta		star				
220/ 230 V	380/ 400 V	415 V	440 V	KM2		KM3		KM1				
kW	kW	kW	kW									kg
4	7.5	7.5	7.5	–	–	–	– [4]	–	1	With	**LC3D09A●●**	1.530
5.5	11	11	11	–	–	–	– [4]	–	1	With	**LC3D12A●●**	1.530
11	18.5	22	22	–	–	–	– [4]	–	1	With	**LC3D18A●●**	1.730
15	25	30	30	–	–	–	– [4]	–	1	With	**LC3D32A●●**	2.030
37	75	75	75	–	1	1	– [4]	–	– [4]	Without	**LC3D80●●**	5.200
										With	**LC3D80●●A64**	5.400
63	110	110	110	–	1	1	– [4]	–	– [4]	Without	**LC3D115●●** [5]	11.800
										With	**LC3D115●●A64** [5]	12.100
75	132	132	147	–	1	1	– [4]	–	1 [4]	Without	**LC3D150●●** [5]	12.100
										With	**LC3D150●●A64** [5]	12.100

Rail mounted starters (35 mm ⎓ rail) without isolating device

Standard power ratings of squirrel cage motors Mains voltage - delta connection				Auxiliary contacts available on each contactor						Star delta mechanical interlock	Basic reference, to be completed by adding the voltage code [2] [3]	Weight
				line		delta		star				
220/ 230 V	380/ 400 V	415 V	440 V	KM2		KM3		KM1				
kW	kW	kW	kW									kg
Maximum operating rate: 12 starts/hour. Maximum starting time: 30 seconds.												
4	7.5	7.5	7.5	–	–	–	–	–	1	With	**LC3K09●●**	0.740
Maximum operating rate: 30 starts/hour. Maximum starting time: 30 seconds												
4	7.5	7.5	7.5	–	–	–	– [4]	–	1	With	**LC3D090A●●**	1.530
5.5	11	11	11	–	–	–	– [4]	–	1	With	**LC3D120A●●**	1.530
11	18.5	22	22	–	–	–	– [4]	–	1	With	**LC3D180A●●**	1.730
15	25	30	30	–	–	–	– [4]	–	1	With	**LC3D320A●●**	2.030

(1) Protection must be provided by the addition of a thermal overload relay, to be ordered separately. Select appropriate overload relay for setting at 0.58 of the full load rated motor current (see pages B11/4 and B11/5).

(2) Standard control circuit voltages:

Volts ∼ 50/60 Hz	24	36	42	48	110	220	230	240	380	400	415	440
Star-delta starters LC3K09												
Code	B7	C7	D7	E7	F7	M7	P7	U7	–	–	–	–
Star-delta starters LC3D09A...D150, LC3D090A…D320A												
Code	B7	–	D7	E7	F7	M7	P7	U7	Q7	V7	N7	R7

For other voltages, please consult your Regional Sales Office.

(3) Please check the availability of your variant in the index page A2/16. The SEARCH function of your viewer can be used.

*(4) One auxiliary contact block type **LADN** can also be fitted, see page B8/37.*

*(5) These starters consist of contactors **LC1D115** or **D150** without connectors.*

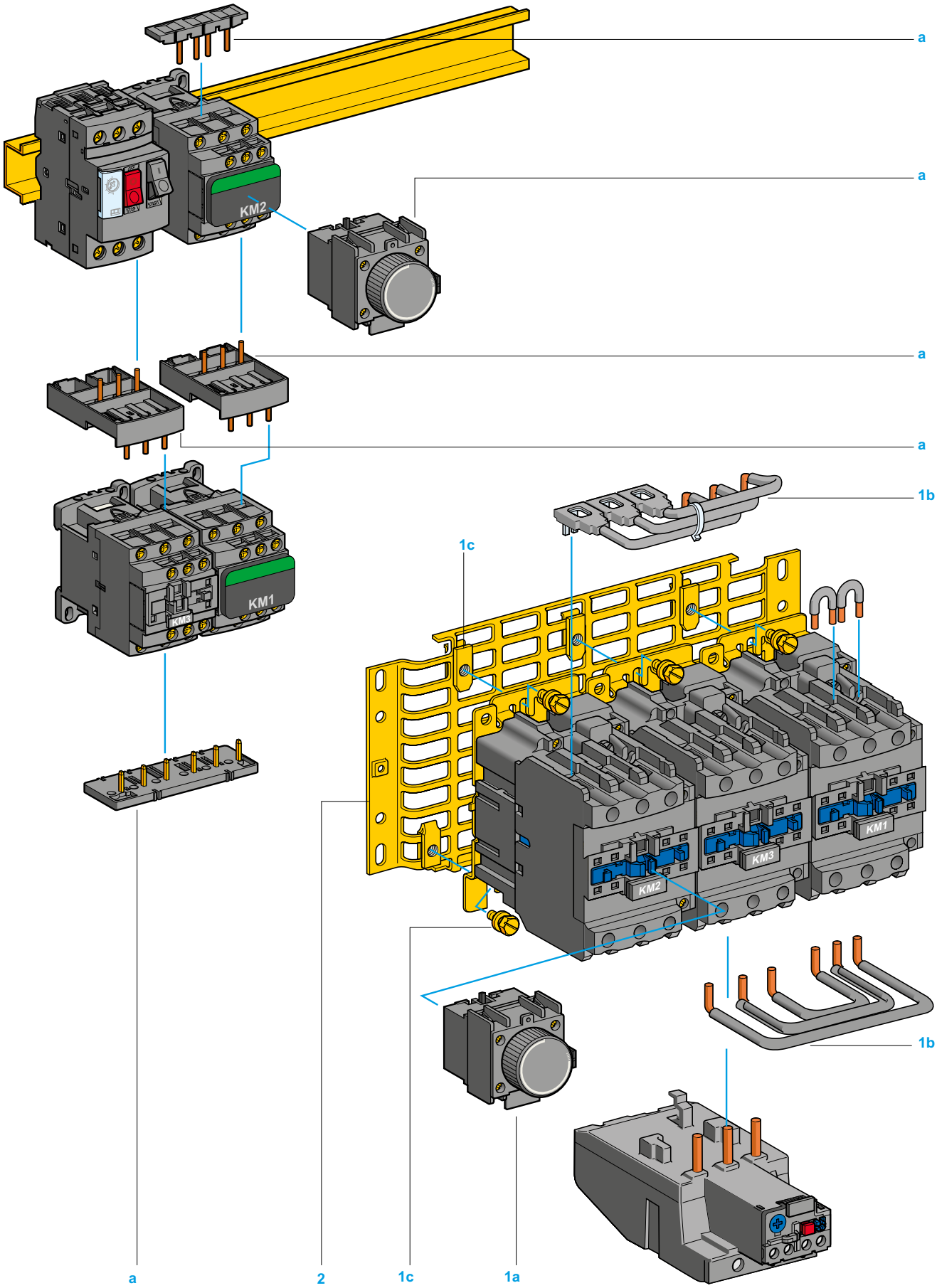

Life Is On Schneider Electric

Star-delta starters without mechanical interlock, for customer assembly on plate or on mounting rail [2]

Starters for direct combination with a circuit breaker

Maximum operating rate: 30 starts/hour. Maximum starting time: 30 seconds

Standard power ratings of squirrel cage motors [3] Mains voltage-delta connection		Thermal-magnetic motor circuit breaker *References in italics are available in CEE zone only*	Contactors (basic references, to be completed by adding the voltage code) [4]		
400/ 415 V	440 V		line	delta	star
kW	kW		KM2	KM3	KM1
7.5	7.5	**GV2ME20** or *GV2ME20AP*	**LC1D09●●**	**LC1D09●●**	**LC1D09●●**
–	9	**GV2ME20** or *GV2ME20AP*	**LC1D12●●**	**LC1D12●●**	**LC1D09●●**
9	11	**GV2ME21** or *GV2ME21AP*	**LC1D12●●**	**LC1D12●●**	**LC1D09●●**
11	–	**GV2ME22** or *GV2ME22AP*	**LC1D12●●**	**LC1D12●●**	**LC1D09●●**
15	15	**GV2ME32** or *GV2ME32AP*	**LC1D18●●**	**LC1D18●●**	**LC1D09●●**

Separate component

Description	Illustration item no.	Reference
Mounting kit comprising: power circuit connections and 1 time delay contact block LADS2	a	**LAD912GV**

Starters for mounting separately from upstream protection

Maximum operating rate: 30 starts/hour. Maximum starting time: 30 seconds.

Standard power ratings of squirrel cage motors [3] Mains voltage - delta connection				Contactors (basic references, to be completed by adding the voltage code) [4]			Separate components (see below)
220/ 230 V	380/ 400 V	415 V	440 V	line	delta	star	
kW	kW	kW	kW	KM2	KM3	KM1	Component types
4	7.5	7.5	7.5	**LC1D09●●**	**LC1D09●●**	**LC1D09●●**	D09
5.5	11	11	11	**LC1D18●●** [6]	**LC1D12●●**	**LC1D09●●**	D12
11	18.5	22	22	**LC1D25●●** [7]	**LC1D25●●** [7]	**LC1D09●●**	D18
15	25	30	30	**LC1D32●●**	**LC1D32●●**	**LC1D18●●**	D32
18.5	37	37	37	**LC1D40A●●**	**LC1D40A●●**	**LC1D40A●●**	D40
30	55	59	59	**LC1D50A●●**	**LC1D50A●●**	**LC1D40A●●**	D50
37	75	75	75	**LC1D80●●**	**LC1D80●●**	**LC1D50A●●**	D80
63	110	110	110	**LC1D115●●**	**LC1D115●●**	**LC1D80●●**	D115 [5]
75	132	132	147	**LC1D150●●**	**LC1D150●●**	**LC1D115●●**	D150 [5]

Separate components

Description	Illustration item no.	For components type [5]	Reference	Without timer LADS2
Mounting kit comprising: - 1 time delay contact block LADS2 (D09…D80) [3], - power circuit connections (D09…D80), - screws and clamps for fixing contactors to the plate (D40…D80).	1 a	LC1D09 to D38 [8]	**LAD91217**	**LAD91218**
	1 b	LC1D09 to D38 [9]	**LAD93217**	**LAD93218**
	1 c	D40 and D50	**LA9D5017**	–
		D80	**LA9D8017**	–
Equipment mounting plates	2	LC1D09 to D38	**LA9D12974**	
		D80	**LA9D80973**	

(1) Protection must be provided by the addition of a thermal overload relay, to be ordered separately.
Select appropriate overload relay for setting at 0.58 of the full load rated motor current, see pages B11/4 and B11/5.
(2) For mounting, assembly and cabling: please refer to installation instructions supplied with the equipment.
(3) See comments on page A2/22.
(4) See page B8/23.
(5) For D115 and D150 components, see illustration and separate parts on pages A2/12 and A2/13.
(6) A D12 component is adequate for the application, but use of a D18 is recommended.
(connection capacity, correct use of power connection kit and connections).
(7) A D18 component is adequate for the application, but use of a D25 is recommended.
(connection capacity, correct use of power connection kit and connections).
(8) For assembly of 3 contactors of the same physical size (depth).
(9) For assembly of 3 contactors with star contactor physically smaller (depth).

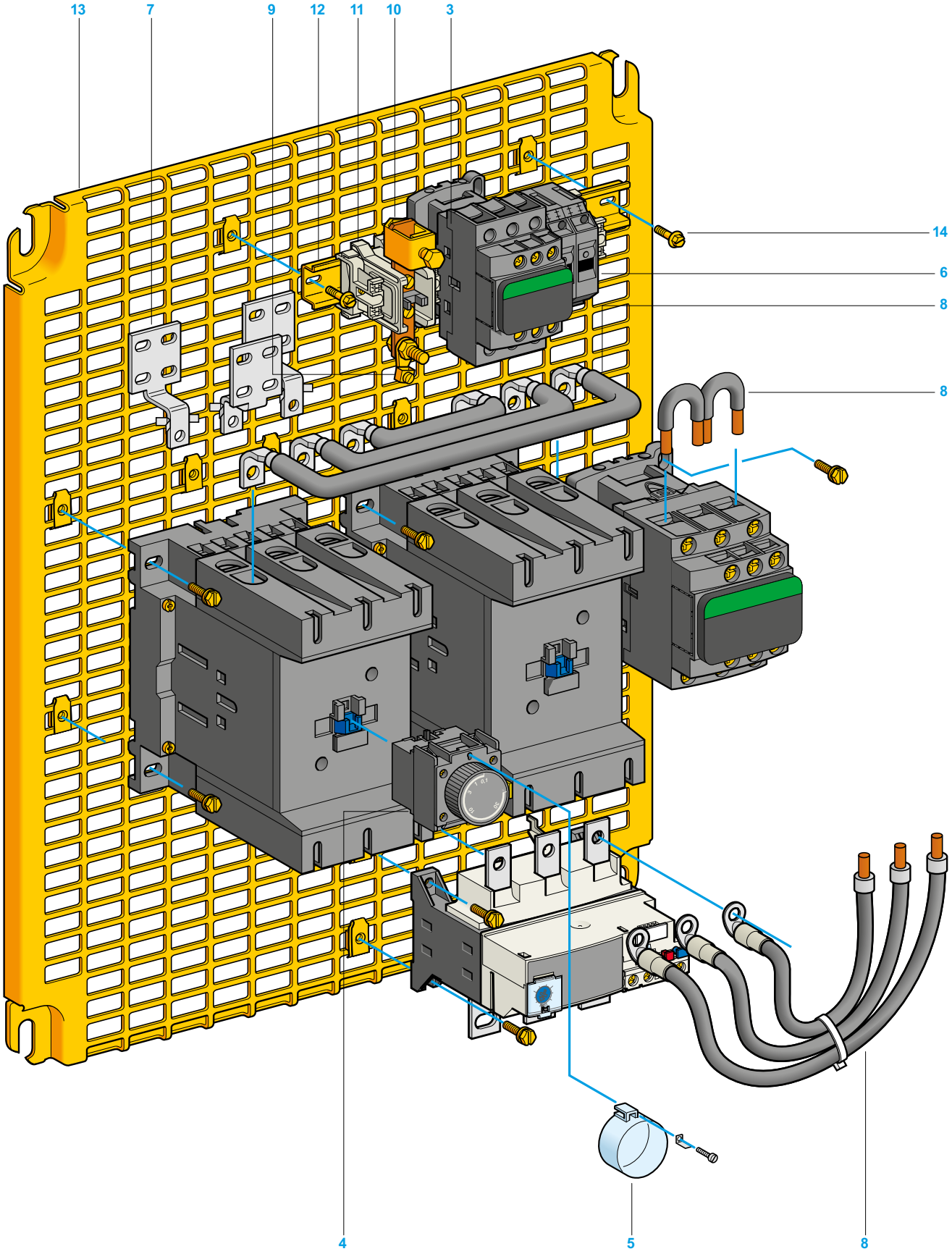

Life Is On Schneider Electric

Starters for mounting separately from upstream protection

Separate components (continued)

Description	Illustration item no.	For use on	No.	Sold in lots of	Unit reference	Weight kg
Instantaneous auxiliary contact blocks 1 N/O	1	D115 (star)	1	1	**LADN10**	0.020
Control relay	3	D115, D150	1	1	**CAD32**	0.320
Time delay auxiliary contact blocks	4	D115, D150	1	1	**LADT2**	0.060
Lead sealing kit for time delay auxiliary contact blocks	5	D115, D150	1	1	**LA9D901**	0.005
Thermal magnetic circuit breaker for control circuit (200…415 V)	6	D115, D150	2	6	**GB2CB05**	0.060
Set of 3 connectors for wider terminations (optional)	7	D115, D150	1	1	**LA9FG980**	0.200
Set of power connections with fixing accessories	8	D115	1	1	**LA9D11517**	0.800
		D150	1	1	**LA9D15017**	1.050
Spare volt free terminals	9	D115, D150	1	10	**DZ3HA3**	0.007
			2	10	**DZ3GA3**	0.006
Lug-connector terminal block	10	D115, D150	1	10	**AB1BC9535**	0.236
End stop	11	D115, D150	3	100	**AB1AB8M35**	0.005
Mounting rail ⊔ 35 mm	12	D115, D150	1	10	**NSYDPR25**	0.210
Pre-slotted mounting plate	13	D115, D150	1	1	**AM3PA65**	1.950
Screw with captive washer	14	D115, D150	12	100	**AF1VA618**	0.006
			2	100	**AF1VA410**	0.002

(1) Protection must be provided by the addition of a thermal overload relay, to be ordered separately. Select appropriate overload relay for setting at 0.58 of the full load rated motor current, see pages B11/4 and B11/5.

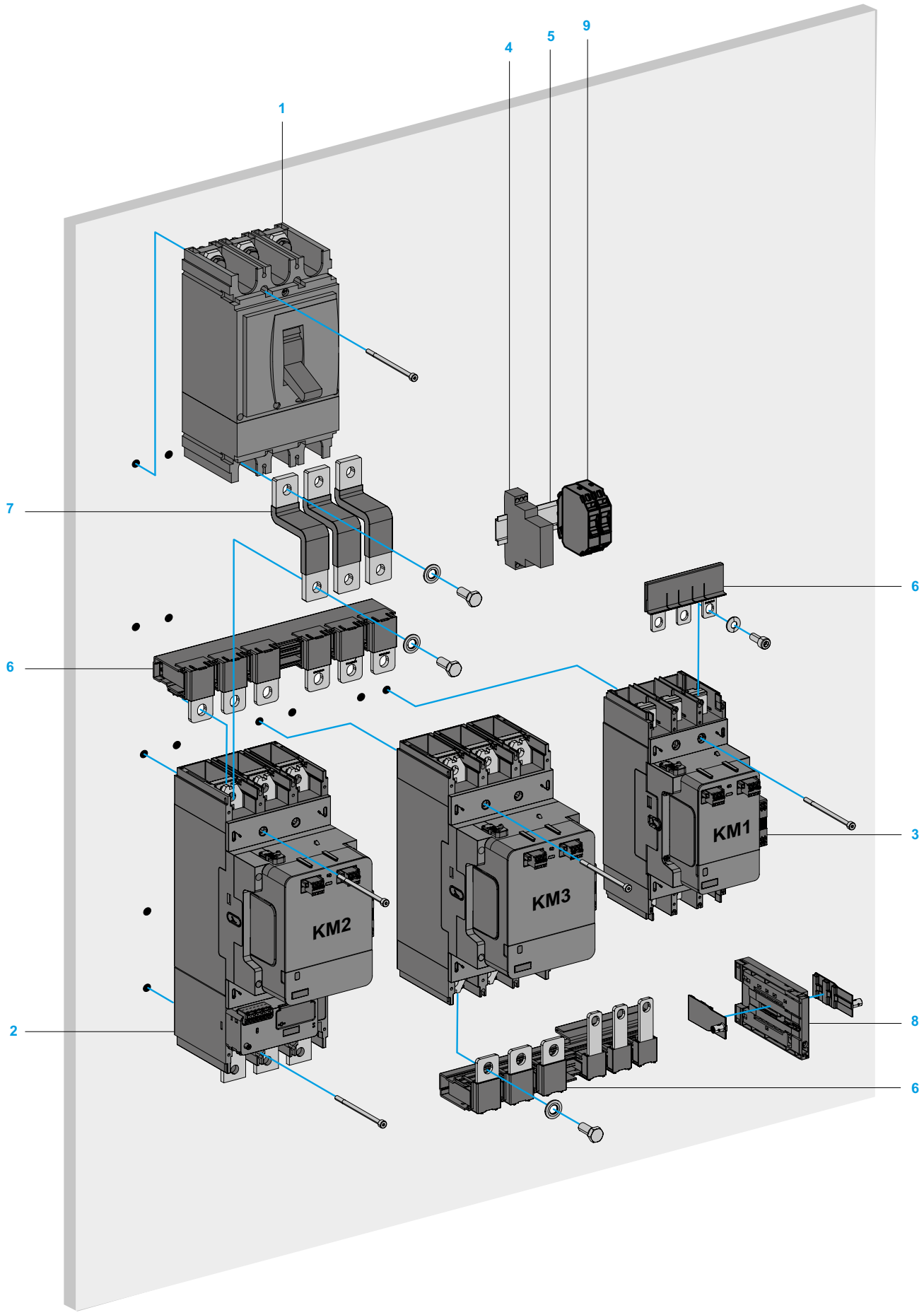

Life Is On Schneider Electric

Star-delta starters with mechanical interlock for customer assembly on back-panel

Maximum operating rate: 30 starts/hour.
Maximum starting time: 30 seconds.
For the selection of TeSys Giga Contactors [2], overload relay [3] and circuit breaker [3] at different operating voltages, please refer to coordination tables pages A5/29, A5/39 and A5/40.
For Star-delta 'Power' and 'Control' circuit diagrams, please refer to page A2/26.

Separate components [4]

Description	Illustration item no.	For use on	No.	Sold in lots of	Unit reference
Circuit breakers	1	G115...G500	1	1	**GV5P220…GV6P500**
			1	1	**NSX250...NSX630**
			1	1	**NS800…NS1000**
Electronic thermal overload relays	2	G115...G500	1	1	**LR9G115… LR9G500** [4]
Auxiliary contact blocks 1NO + 1NC	3	G115...G500	3	-	**LAG8N113P** (Supplied with the contactor)
Timer	4	G115...G500	1	1	**RE17RMMWS**
Mounting Rail	5	G115...G500	1	10	**NSYSDR200**
Sets of power connections	6	G115...G500 (LDY) [5]	1	1	**LA9GQQ330**
		G115...G500 (LDY) [5]	1	1	**LA9GSS330**
		G115...G500 (LDY) [5]	1	1	**LA9GTT330**
		LD: G265…G500 [5] Y: G115…G225 [5]	1	1	**LA9GSQ331**
Flexible terminal extensions for MCCB	7	G115…G225	1	1	**LA9G3111**
		G265…G500	1	1	**LA9G3112**
Mechanical interlock kit	8	G115…G500	1	1	**LA9G970**
		G265…G500 # G115…G225	1	1	**LA9G971**
Thermal magnetic circuit breaker for 5 A control circuit	9	G115…G500	2	6	**GB2CB10**

(1) Protection shall be provided by a thermal-magnetic circuit breaker or by a magnetic circuit breaker and an overload relay combination.
(2) The contactors are supplied with wide band AC/DC coils with 1 NO + 1 NC auxiliary contact block. Please refer to pages B9/10 to B9/13 for the complete references of the contactors.
(3) The protection device settings should be adjusted according to motor characteristics and conditions of use.
*(4) Please refer to pages B11/11 to B11/14 for details on **LR9G** electronic overload relays.*
(5) L- Line contactor/ D- Delta contactor/ Y- Star contactor.

Product references

AB1AB8M35	GV2ME08K1BW3	LC3D115P7A64
AB1BC9535	GV2ME08K1P7	LC3D120AP7
ACMGV973	GV2ME10K1BW3	LC3D12AB7
AE3FX122	GV2ME14K1B7	LC3D12AP7
AF1CD061	GV2MP01	LC3D150M7A64
AF1CD081	GV2MP02	LC3D150P7
AF1VA410	GV2MP03	LC3D150P7A64
AF1VA618	GV2MP04	LC3D180AB7
AF1VC820	LA9D11517	LC3D180AP7
AM3PA65	LA9D115604	LC3D18AB7
CAD32	LA9D115692	LC3D18AF7
GB2CB05	LA9D11570	LC3D18AP7
GB2CB10	LA9D115704	LC3D18AU7
GV2AF01	LA9D12974	LC3D320AG7
GV2AF3	LA9D15017	LC3D320AP7
GV2AF4	LA9D5017	LC3D32AB7
GV2DM102BD	LA9D730	LC3D32AF7
GV2DM107BD	LA9D80973	LC3D32AP7
GV2DM107P7	LA9D901	LC3D80B7
GV2DM108B7	LA9GQQ330	LC3D80B7A64
GV2DM108BD	LA9GSS330	LC3D80E7A64
GV2DM108P7	LA9GTT330	LC3D80F7
GV2DM110BD	LA9GSQ331	LC3D80F7A64
GV2DM114B7	LA9G3111	LC3D80M7
GV2DM114BD	LA9G3112	LC3D80P7
GV2DM116BD	LA9G970	LC3D80P7A64
GV2DM132B7	LA9G971	LC3D80U7A64
GV2DM204B7	LAD31	LC3K09P7
GV2DM205BD	LAD91217	LC4D12AP7
GV2DM206BD	LAD91218	LC4D12AV7
GV2DM208BD	LAD93217	LC4D25AB7
GV2DM221M7	LAD93219	LC4D25AP7
GV2DM221P7	LADN10	NSYDPR25
GV2DM232P7	LADN22	NSYSNM6
GV2MC01	LADT2	NSYSNM8
GV2MC02	LAG8N113P	NSYSDR200
GV2MC03	LC3D090AB7	RE17RMMWS
GV2MCK04	LC3D090AP7	
GV2ME06K1BW3	LC3D09AB7	
GV2ME06K2BW3	LC3D09AP7	
GV2ME06K2M7	LC3D115F7A64	
GV2ME07K1BW3	LC3D115M7A64	
GV2ME07K2BW3	LC3D115P7	

This document is current. Click on the product reference to get the most recent availability status (hyperlink to **se.com** product datasheet).
If your product variant is no longer available, please consult your distributor or regional sales office.

Life Is On Schneider Electric

Open pre-cabled motor starters

Technical Data for Designers

Contents

Non-reversing / Reversing starters ..... A2/18 to A2/21
Star-delta starters ..... A2/22 to A2/26

Dimensions, mounting

GV2ME••K•••

On mounting rail NSYSDR200

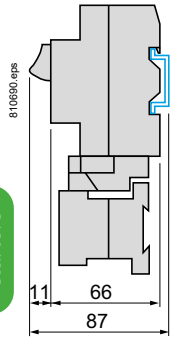

GV2ME••K1••

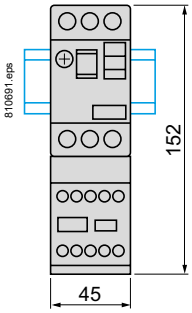

GV2ME••K2••

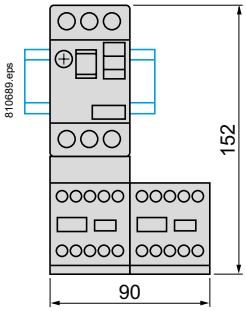

GV2DM•••••

On mounting rail NSYSDR200

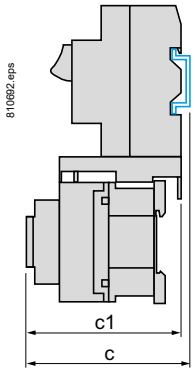

GV2DM1••••

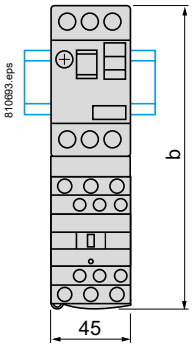

GV2DM2••••

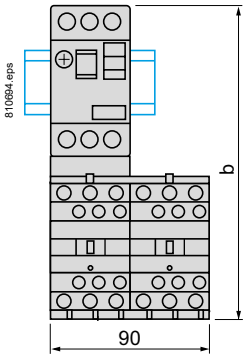

GV2DM••••• contactor with AC or DC coil on mounting rail NSYSDR200		
GV2	**DM•02•• to DM•20••**	**DM•21•• to DM•32••**
b	177	187
c	106	113
c1	96	103

GV2P•• + LC•D09 + GV2AF3

On mounting rail NSYSDR200

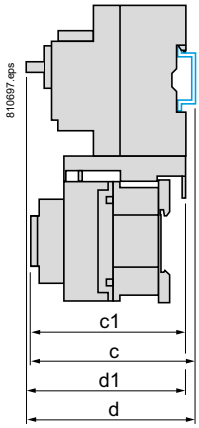

GV2P•• + LC1D•• + GV2AF3

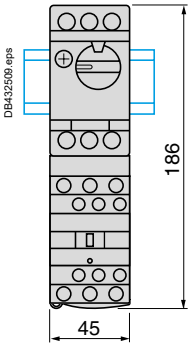

GV2P•• + LC2D•••• + GV2AF3

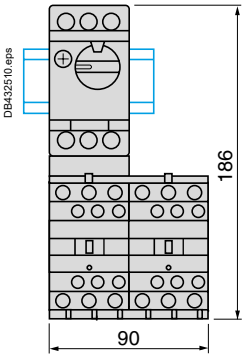

LC1D, LC2D contactor with AC or DC coil on mounting rail		
GV2	**P02 to P08**	**P10 to P32**
c	111	118
c1	101	108
d	107	107
d1	97	97

References:
pages A2/2 to A2/7

Schemes:
pages A2/20 and A2/21

Life Is On Schneider Electric

Dimensions, mounting

GV3P●●1 + LC1D40A…D65A (for customer assembly)

Vertical mounting (1)

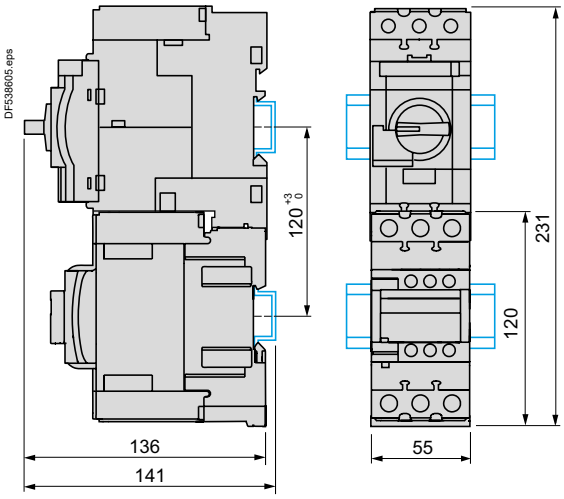

Side by side mounting with S-shape busbar system GV3 S (2)

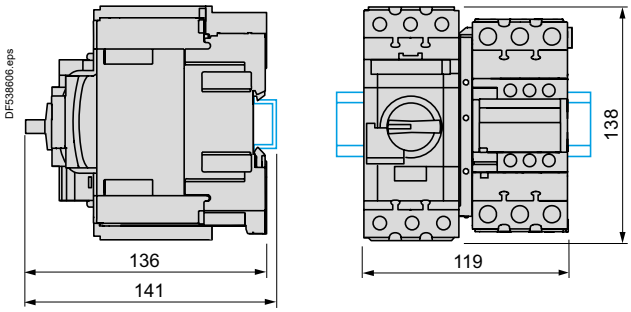

GV3P●●1 + LC2D40A…D65A (for customer assembly)

Vertical mounting (1)

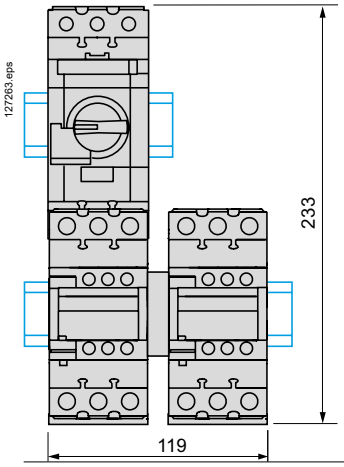

Side by side mounting with S-shape busbar system GV3 S (2)

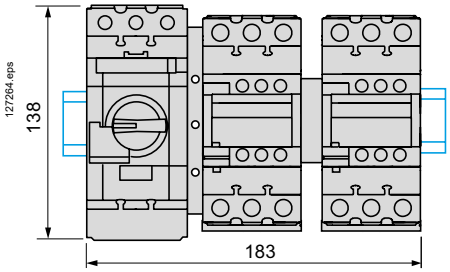

(1) For several side-by-side motor starters, the maximum current allowed is equal to the nominal current under 400 V.
Example: 55 A for a 30 kW motor under 400 V, for a GV3 P65 circuit breaker and a LC1 D65A contactor association.
(2) The maximum current allowed is equal to 90 % of maximum current. Example: 45 A for a LC1 D50A contactor.

Open motor starters
Ref.

References:
pages A2/6 and A2/7

Schemes:
page A2/21

Schemes

GV2ME●●K1●●

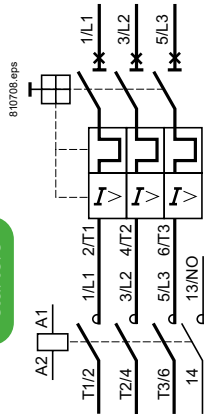

GV2ME●●K2●●

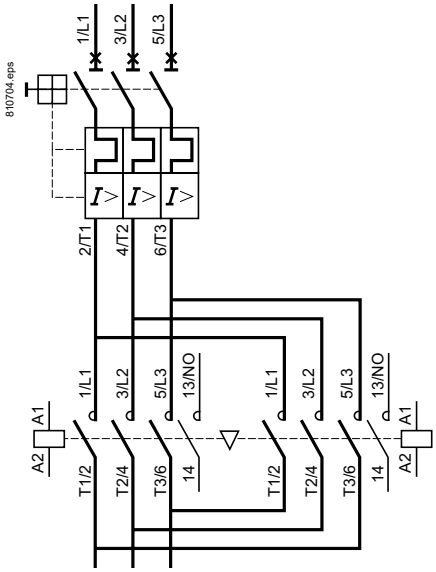

GV2DM1●●●●

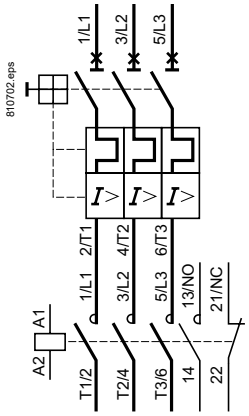

GV2DM2●●●●

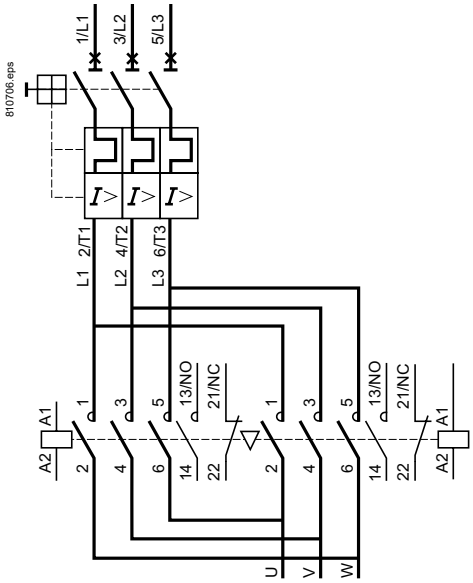

References:
pages A2/2 to A2/5

Dimensions:
page A2/18

Life Is On Schneider Electric

Schemes

GV2P●● + LC1D●●●●

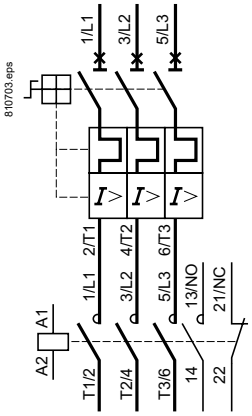

GV2P●● + LC2D●●●●

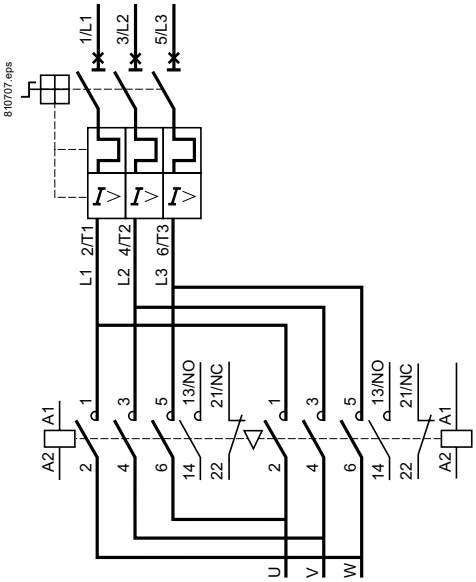

Mechanical interlock with integral electrical contacts

Control circuit ∿

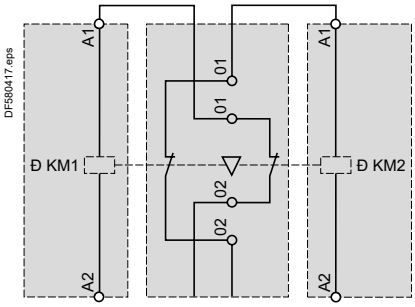

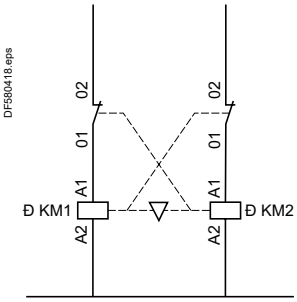

Control circuit ⎓

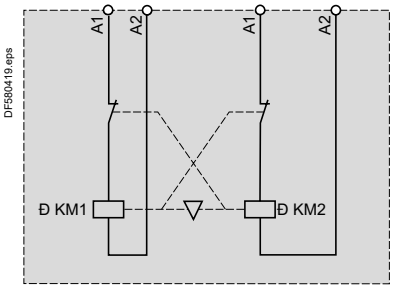

Open motor starters
Ref.

References:
pages A2/6 and A2/7

Dimensions:
pages A2/18 and A2/19

Star-delta starting

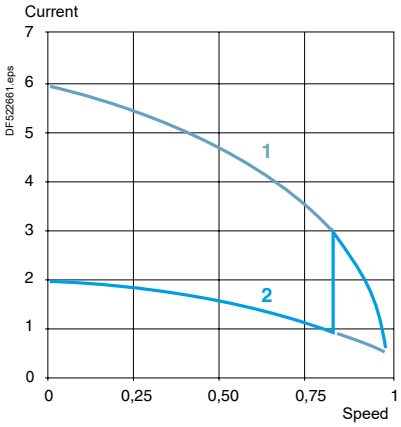

1 Starting in direct delta connection
2 Starting in star connection

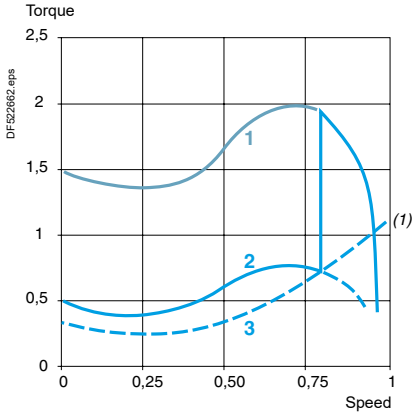

1 Starting in direct delta connection
2 Starting in star connection
3 Resistive torque of the machine

This method of starting is applicable to motors on which all 6 stator terminals are accessible and whose delta connection voltage corresponds to the mains voltage.

Star-delta starting should be used for motors starting on no-load or having a low load torque and gradual build-up:
- the starting torque in star connection is reduced to one third of the direct starting torque, i.e. about 50 % of the rated torque.
- the starting current in star connection is about 1.8 to 2.6 times the rated current.

The transition from star to delta connection must occur when the machine has run up to speed. A too rapid build-up in load torque would cause the stabilised run-up speed to be too low and would therefore eliminate any advantage in this method of starting: this is the case with certain machines whose load torque depends on the machine speed (a characteristic of centrifugal machines, for example).

All star-delta starters are supplied with a special LADS2 or LA2KT2● time delay relay which imposes a delay on the delta contactor during the transition period in order to allow the star contactor sufficient breaking time.

For ratings D115 and D150, this function is performed by a time delay auxiliary contact block LADT2 and a control relay.

(1) Motor manufacturers generally specify machine load torques.
Example: maximum resistive torque on completion of star-delta start (expressed as a proportion of the rated torque).

References:
pages A2/8 to A2/15
Dimensions:
pages A2/23 to A2/25
Schemes:
pages A2/24 and A2/26

Life Is On Schneider Electric

Dimensions, mounting

Dimensions

LC3K plate mounted, pre-assembled

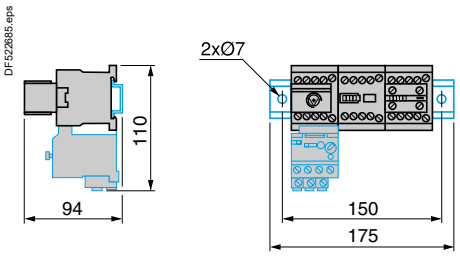

On starters LC3D09A to D18A, a connection block is mounted on the upper part of contactor KM2, increasing the overall height of the product by 6.5 mm.

LC3D09A…D32A pre-assembled or 3 x LC1D09A...D32A (customer assembly) + components

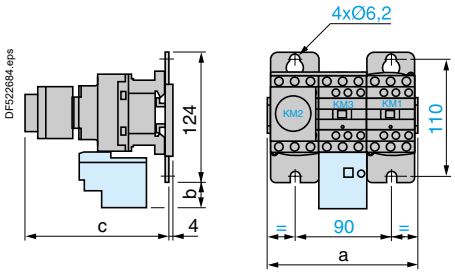

LC3		D09A	D12A	D18A	D32A
a		143	143	144	165
b		26.5	26.5	26.5	32.5
c	with LADS	139	139	139	145
	with LADS and sealing cover	143	143	143	149

LC3D80 pre-assembled or 3 x LC1D80 (customer assembly) + components

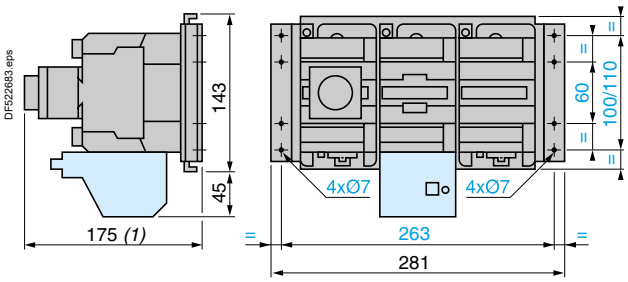

(1) +4 mm with sealing cover

LC3D115, D150 pre-assembled or 3 x LC1D115...D150 (customer assembly) + components

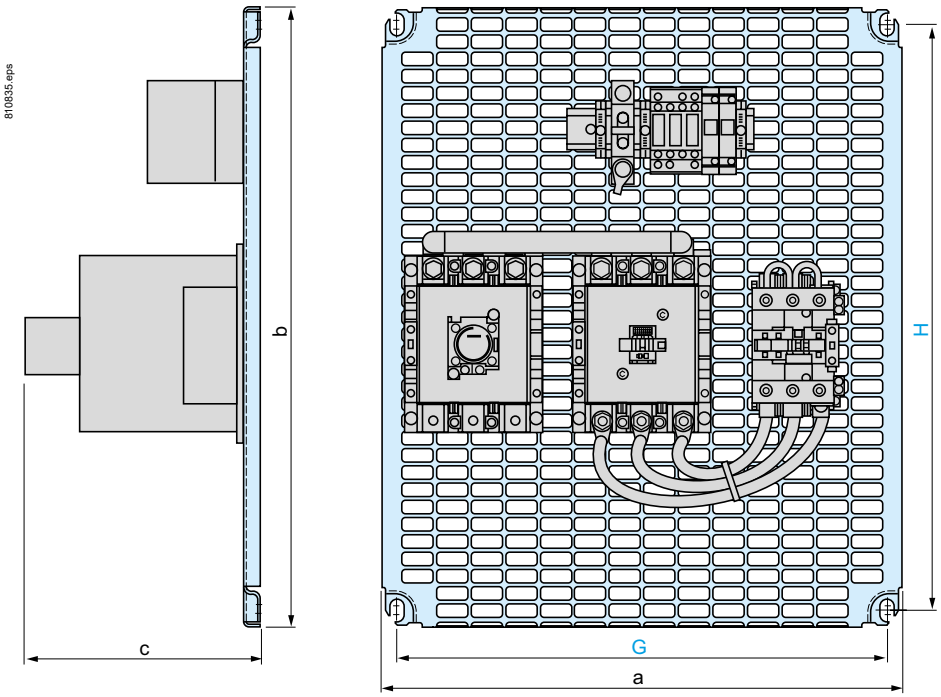

		a	b	c	G	H
LC3D115 or 3 x LC1D with components	D115	450	555	205	425	525
LC3D150 or 3 x LC1D with components	D150	450	555	205	425	525

References:
pages A2/8 to A2/13

Introduction:
page A2/22

Schemes:
page A2/24

Dimensions

LC3D090A à D320A on NSYSDR mounting rail, pre-assembled

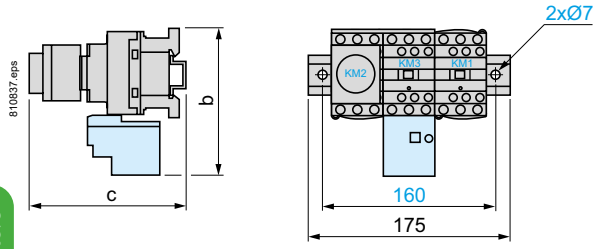

LC3		D090A à D180A	D320A
b		153	137
c	with LADS	139	145
	with LADS and sealing cover	143	149

Schemes

LC3K, LC3D09A to D80
LC3D090A to D320A

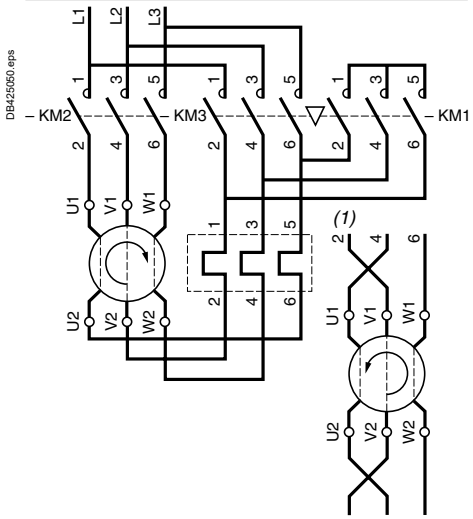

LC3K

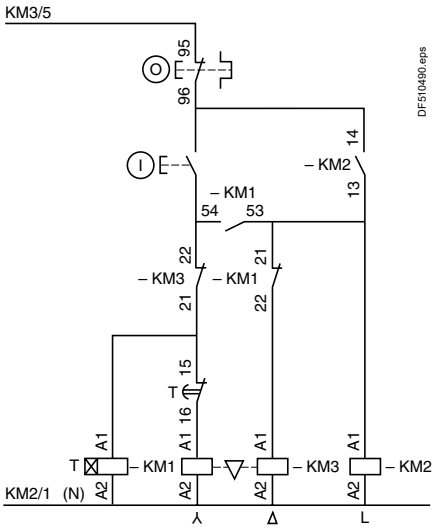

LC3D

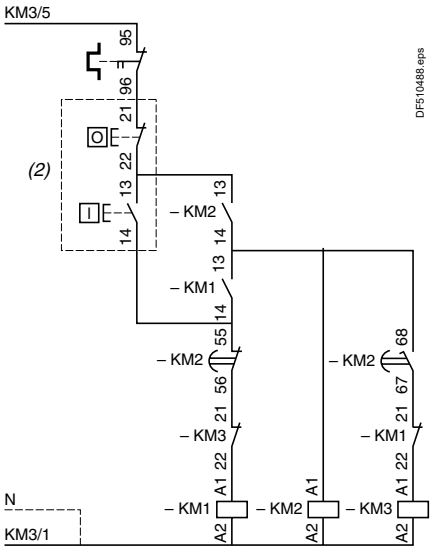

Note: LC3D09A to D18A: Mechanical interlock between KM3 and KM1.

LC3D115 and D150

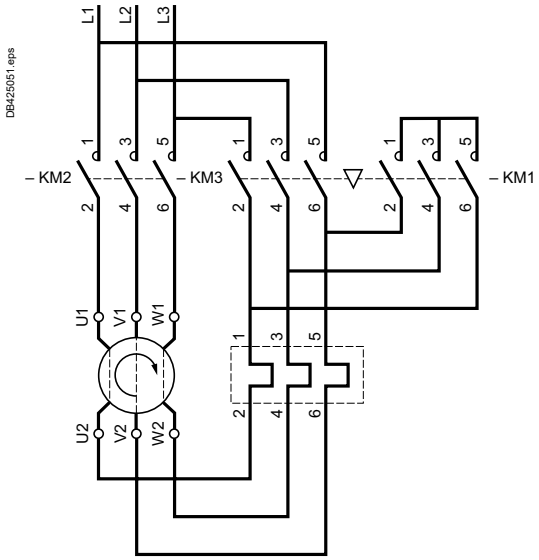

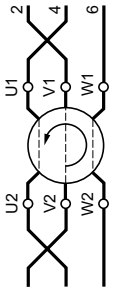

Recommended cabling for reversal of motor rotation (standard motor, viewed from shaft end).

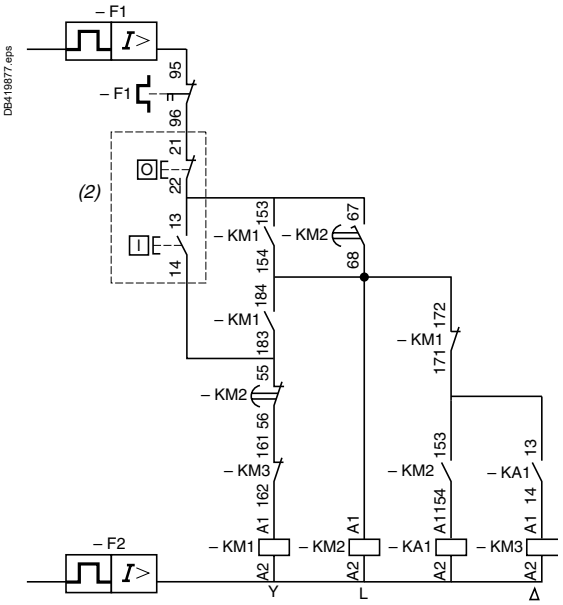

(1) Recommended cabling for reversal of motor rotation (standard motor, viewed from shaft end).
(2) Remote control.

Dimensions, mounting

Dimensions

TeSys Giga star-delta starters with mechanical interlock for customer assembly on back-panel

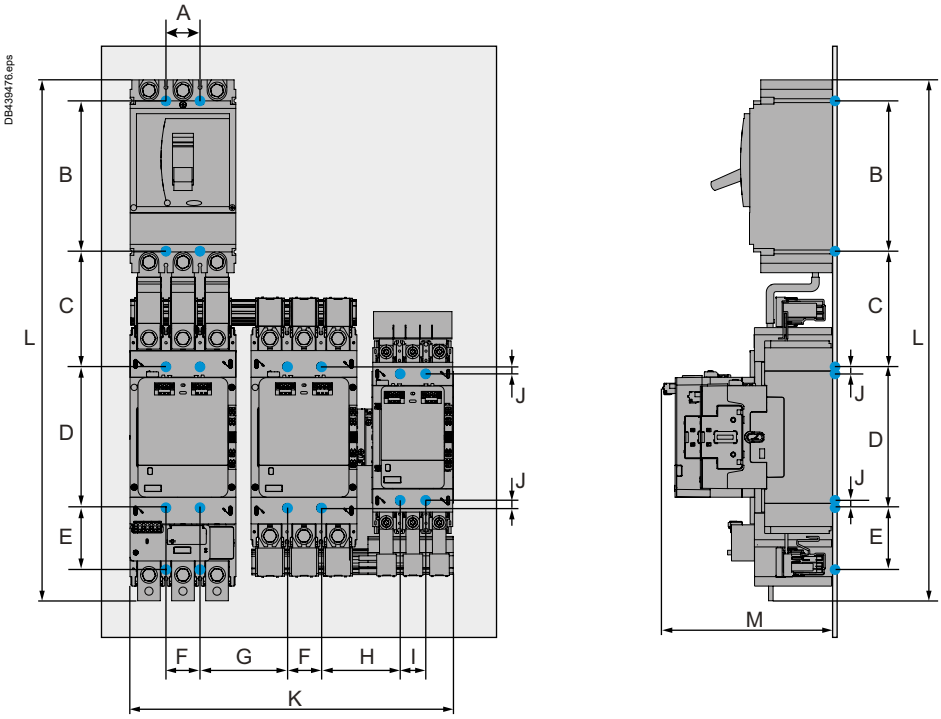

Circuit Breaker	Line & Delta Contactor	Star Contactor	Overload relay	A	B	C	D	E	F	G	H	I	J	Overall width K	Overall height L	Overall depth M
NSX250	LC1G115 …225	LC1G115 …225	LR9G115/ LR9G225	35	125	87	166	79.15	35	92.7	92.7	35	0	364	523	193
NSX400/ NSX630	LC1G115 …225	LC1G115 …225	LR9G115/ LR9G225	45	200	118	166	79.15	35	92.7	92.7	35	0	364	565.5	193
NSX400/ NSX630	LC1G265 …500	LC1G115 …225	LR9G500	45	200	118	187	81.85	45	115	103.85	35	10.5	428	670	225
NSX400/ NSX630	LC1G265 …500	LC1G265 …500	LR9G500	45	200	118	187	81.85	45	115	115	45	0	463	670	225
NS800	LC1G265 …500	LC1G115 …225	LR9G500	199	200	217	187	81.85	45	115	103.85	35	10.5	428	804.6	225
NS800	LC1G265 …500	LC1G265 …500	LR9G500	199	200	217	187	81.85	45	115	115	45	0	463	804.6	225

Note: *All dimensions are in mm.*

References:
pages A2/14 and A2/15
Introduction:
page A2/22
Schemes:
page A2/26

TeSys Giga star-delta motor 'Power' circuit diagram

Thermal magnetic circuit breaker + contactors

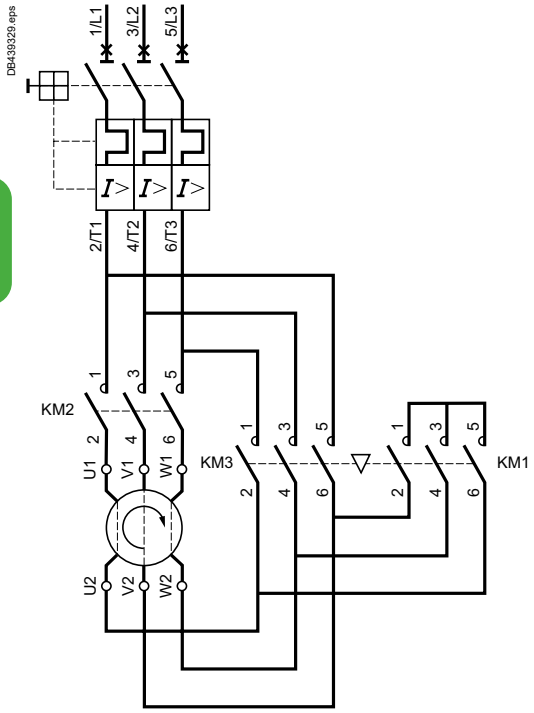

Magnetic circuit breaker + contactors + overload relay

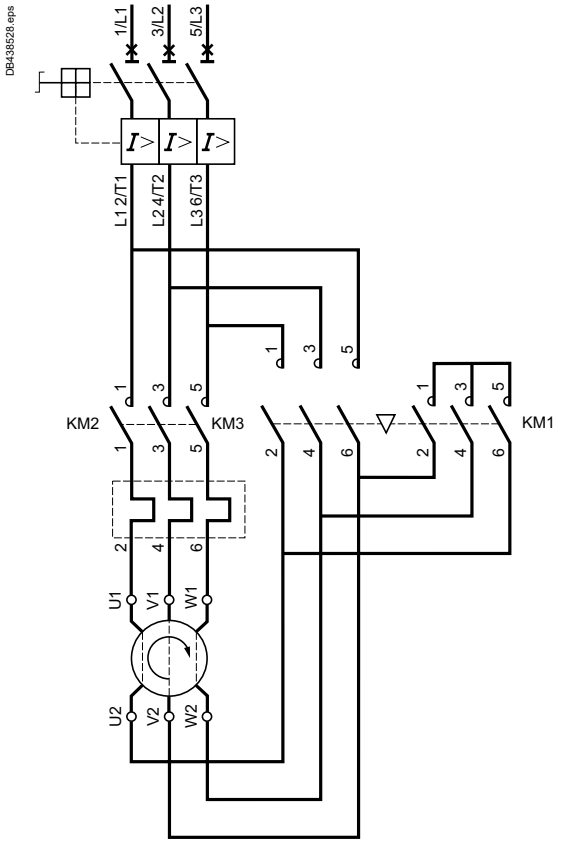

TeSys Giga star-delta motor 'Control' circuit diagram

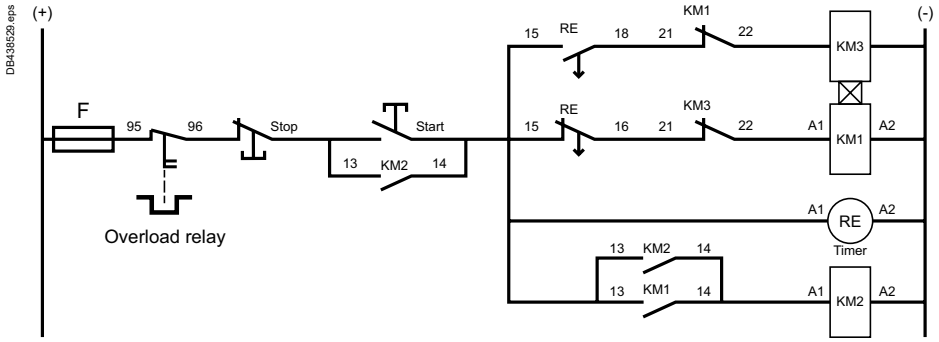

Recommended timing relay (RE): Zelio Timer ref. **RE17RMMWS** (12...240 V AC/DC 50/60 Hz – 8 A AC/DC contacts)

References:
pages A2/14 and A2/15

Introduction:
page A2/22

Dimensions:
page A2/25

Life Is On Schneider Electric

TeSys Control
Hybrid motor starters

Introduction	A3/2

TeSys Hybrid motor starters

Type of product	Range		Page
Ultra-compact starters IEC ratings Standard starters, screw or spring terminals, direct-on-line or reverse Safety starters, screw or spring terminals, direct-on-line or reverse	Up to 3 kW AC53a Up to 9 A AC51		A3/6
Ultra-compact starters UL ratings Standard starters, screw or spring terminals, direct-on-line or reverse Safety starters, screw or spring terminals, direct-on-line or reverse	Up to 3 hp AC53a Up to 9 A AC51		A3/7
TeSys Deca Circuit breakers for a group of starters Selection of magnetic motor circuit breakers TeSys GV2L – rotary knob TeSys GV2LE – rocker lever	Up to 32 A		A3/8

Technical Data for Designers	A3/11

The most compact 3 KW / 400 V starter in the world

Up to 75 % of space reduction

- Ultra-compact 22.5 mm starter
- Reversing starter in the same width
- Maximum space savings for group starter architecture

Long electrical durability

- Suitable for high demanding application
- 30 000 000 of AC53a electrical cycles

> With printed QR code, referring directly to the product data sheet.

Easy Design

- Wide range setting motor protection
- Automatic, manual or remote reset after thermal trip
- Wide range of control voltage

Easy to integrate

- Direct mounting installation on DIN rail
- Control terminals on the upper side
- Power terminal on the lower side

Life Is On Schneider Electric

Standard version

- 2 ratings:
  - 2.4 A 400 V AC53a
  - 6.5 A 400 V AC53a
- 2 control voltages:
  - 24 V DC
  - 110 V / 230 V AC
- 2 terminal types:
  - Screw clamps
  - Spring
- Can provide up to 3 functions:
  - Forward running
  - Reverse running
  - Overload protection

Safety version

- Safe Torque Off embedded:
  - SIL3 according to IEC61508-1
  - Ple according to ISO13849-1
- ATEX:
  - As associated devices for motor protection

> Hybrid motor starters are a solution dedicated to low footprint applications, in industries as food and beverage, logistics, and durable goods.

Conventional ..... OR ..... Hybrid Standard starter

PB123814.eps

Direct-on-line

PB114711_7.eps

PB123831.eps

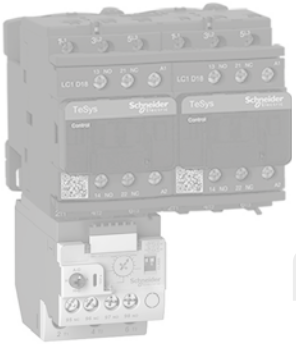

Reverse

PB114712_7.eps

> How does the hybrid technology work ?

Hybrid technology:

Each contact is coupled with a power semiconductor for switching

> Higher number of on/off switches, extended durability.

> Closing

DB418917.eps

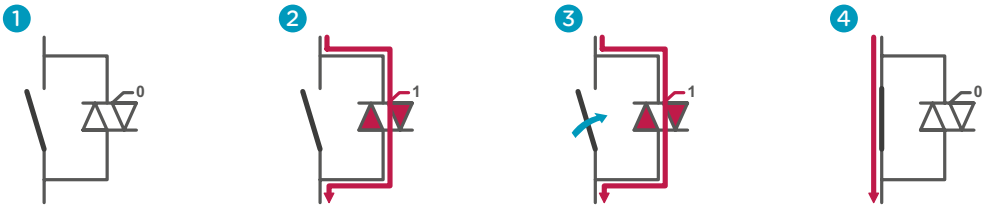

1

2 **Start:** conduction through the semiconductor.

3 Contact closure under zero voltage. No electrical arc: the contact is preserved.

4 The semiconductor is non-conducting.

> Opening

DB418918.eps

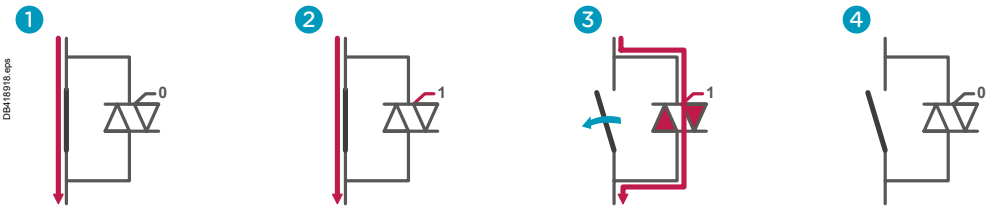

1

2 Before the opening of the contact the semiconductor is triggered.

3 Contact opening:
- no arc: the contact is preserved.

4 **Stop:** the semiconductor becomes non-conducting.

Life Is On | Schneider Electric

Conventional ..... OR ..... Hybrid Safety starter

Direct-on-line

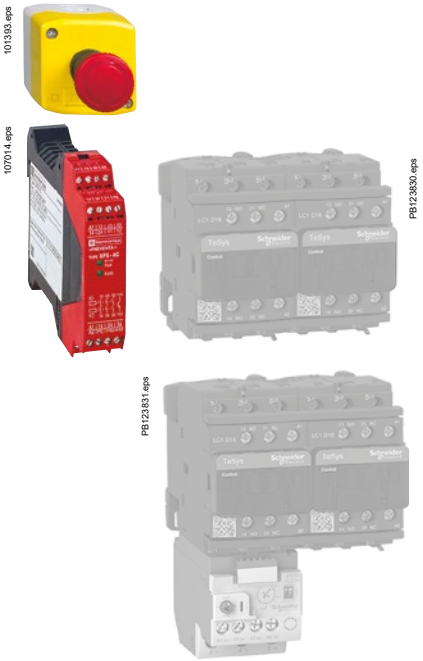

Reverse

Hybrid Safety starter

- Immediate respect of the **highest safety standards**
- Simplified design of your **safety electrical architecture**
- **Quicker** panel implementation

PB114711.eps

LZ1H2X4BD

Starters for asynchronous motors - AC53a utilization category:

Standard starters hybrid per IEC ratings

Starters	3- phases motor: max power (KW) for various voltage							Current range	Commercial references
	220 V	230 V	380 V	400 V	415 V	440 V	500 V	A	
Direct-on-line									
Screw terminals	0.37	0.37	0.75	0.75	0.75	0.75	1.1	0.18...2.4	**LZ1H2X4BD**
	1.5	1.5	2.2	3	3	3	3	1.5...6.5	**LZ1H6X5BD**
Spring terminals	0.37	0.37	0.75	0.75	0.75	0.75	1.1	0.18...2.4	**LZ1H2X43BD**
	1.5	1.5	2.2	3	3	3	3	1.5...6.5	**LZ1H6X53BD**
Reverse									
Screw terminals	0.37	0.37	0.75	0.75	0.75	0.75	1.1	0.18...2.4	**LZ2H2X4BD**
	1.5	1.5	2.2	3	3	3	3	1.5...6.5	**LZ2H6X5BD**
Spring terminals	0.37	0.37	0.75	0.75	0.75	0.75	1.1	0.18...2.4	**LZ2H2X43BD**
	1.5	1.5	2.2	3	3	3	3	1.5...6.5	**LZ2H6X53BD**

PB114715.eps

LZ7H2X4BD

Safety starters hybrid per IEC ratings

Starters	3- phases motor: max power (KW) for different tensions							Current range	Commercial references
	220 V	230 V	380 V	400 V	415 V	440 V	500 V	A	
Direct-on-line									
Screw terminals	0.37	0.37	0.75	0.75	0.75	0.75	1.1	0.18...2.4	**LZ7H2X4BD**
	1.5	1.5	2.2	3	3	3	3	1.5...6.5	**LZ7H6X5BD**
Spring terminals	0.37	0.37	0.75	0.75	0.75	0.75	1.1	0.18...2.4	**LZ7H2X43BD**
	1.5	1.5	2.2	3	3	3	3	1.5...6.5	**LZ7H6X53BD**
Reverse									
Screw terminals	0.37	0.37	0.75	0.75	0.75	0.75	1.1	0.18...2.4	**LZ8H2X4BD**
	1.5	1.5	2.2	3	3	3	3	1.5...6.5	**LZ8H6X5BD**
Spring terminals	0.37	0.37	0.75	0.75	0.75	0.75	1.1	0.18...2.4	**LZ8H2X43BD**
	1.5	1.5	2.2	3	3	3	3	1.5...6.5	**LZ8H6X53BD**

Starters for resistive load AC51 utilization category:

Starters	Resistive load current	Application	Commercial references
	A		
Screw terminals	2.4	Standard	**LZ1H2X4BD**
		Safety	**LZ7H2X4BD**
	9	Standard	**LZ1H6X5BD**
		Safety	**LZ7H6X5BD**
Spring terminals	2.4	Standard	**LZ1H2X43BD**
		Safety	**LZ7H2X43BD**
	9	Standard	**LZ1H6X53BD**
		Safety	**LZ7H6X53BD**

Description:
pages A3/12 and A3/13
Characteristics:
pages A3/14 and A3/15
Curves:
pages A3/16 and A3/17
Dimensions, schemes:
page A3/18

Starters for asynchronous motors - AC53a utilization category:

PB114713.eps

LZ1H2X43BD

Standard starters hybrid per UL ratings

Starters	3- phases motor in HP			Current range	Commercial references
	208 V	220 V - 240 V	440 V - 480 V	A	
Direct-on-line					
Screw terminals	1/2	1/2	1	0.18...2.4	**LZ1H2X4BD**
	1	1.5	3	1.5...6.5	**LZ1H6X5BD**
Spring terminals	1/2	1/2	1	0.18...2.4	**LZ1H2X43BD**
	1	1.5	3	1.5...6.5	**LZ1H6X53BD**
Reverse					
Screw terminals	1/2	1/2	1	0.18...2.4	**LZ2H2X4BD**
	1	1.5	3	1.5...6.5	**LZ2H6X5BD**
Spring terminals	1/2	1/2	1	0.18...2.4	**LZ2H2X43BD**
	1	1.5	3	1.5...6.5	**LZ2H6X53BD**

PB114716.eps

LZ8H6X5BD

Safety starters hybrid per UL ratings

Starters	3- phases motor in HP			Current range	Commercial references
	208 V	220 V - 240 V	440 V - 480 V	A	
Direct-on-line					
Screw terminals	1/2	1/2	1	0.18...2.4	**LZ7H2X4BD**
	1	1.5	3	1.5...6.5	**LZ7H6X5BD**
Spring terminals	1/2	1/2	1	0.18...2.4	**LZ7H2X43BD**
	1	1.5	3	1.5...6.5	**LZ7H6X53BD**
Reverse					
Screw terminals	1/2	1/2	1	0.18...2.4	**LZ8H2X4BD**
	1	1.5	3	1.5...6.5	**LZ8H6X5BD**
Spring terminals	1/2	1/2	1	0.18...2.4	**LZ8H2X43BD**
	1	1.5	3	1.5...6.5	**LZ8H6X53BD**

Starters for resistive load AC51 utilization category:

Starters	Resistive load current	Application	Commercial references
	A		
Screw terminals	2.4	Standard	**LZ1H2X4BD**
		Safety	**LZ7H2X4BD**
	9	Standard	**LZ1H6X5BD**
		Safety	**LZ7H6X5BD**
Spring terminals	2.4	Standard	**LZ1H2X43BD**
		Safety	**LZ7H2X43BD**
	9	Standard	**LZ1H6X53BD**
		Safety	**LZ7H6X53BD**

Description:
pages A3/12 and A3/13
Characteristics:
pages A3/14 and A3/15
Curves:
pages A3/16 and A3/17
Dimensions, schemes:
page A3/18

Selection table

PB121671_Reps

PB114721_reps

GV2L + LZ2H2X4BD

Magnetic motor circuit breakers:
- GV2L: rotary knob type - Ue = 500 V
- GV2LE: rocker lever type - Ue = 415 V.

Selection of the circuit breaker
Type 1 coordination according to IEC/EN 60947-4-2

Max	Iq	Number of H		Reference Circuit breaker	
		2.4 A	6.5 A	Rotary	Rocker
A	kA				
0.4	50.0	1	–	**GV2L03**	**GV2LE03**
0.63	50.0	1	–	**GV2L04**	**GV2LE04**
1	50.0	1	1	**GV2L05**	**GV2LE05**
1.6	50.0	1	1	**GV2L06**	**GV2LE06**
2.5	35.0	1	1	**GV2L07**	**GV2LE07**
4	12.5	1	1	**GV2L08**	**GV2LE08**
6.3	8.0	2	1	**GV2L10**	**GV2LE10**
10	7.0	4	1	**GV2L14**	**GV2LE14**
14	5.0	5	2	**GV2L16**	**GV2LE16**
18	4.0	7	2	**GV2L20**	**GV2LE20**
25	4.0	10	3	**GV2L22**	**GV2LE22**
32	3.0	13	4	**GV2L32**	**GV2LE32**

Product references

LZ1H2X43BD	**LZ7H2X43BD**
LZ1H2X4BD	**LZ7H2X4BD**
LZ1H6X53BD	**LZ7H6X53BD**
LZ1H6X5BD	**LZ7H6X5BD**
LZ2H2X43BD	**LZ8H2X43BD**
LZ2H2X4BD	**LZ8H2X4BD**
LZ2H6X53BD	**LZ8H6X53BD**
LZ2H6X5BD	**LZ8H6X5BD**

This document is current. Click on the product reference to get the most recent availability status (hyperlink to **se.com** product datasheet).
If your product variant is no longer available, please consult your distributor or regional sales office.

Life Is On Schneider Electric

Technical Data for Designers

Contents

Description ..... A3/12 to A3/13
Characteristics..... A3/14 to A3/15
Curves ..... A3/16 to A3/17
Dimensions and schemes A3/18

Identification of terminals / Indicators / Setting means and procedure

Setting procedure

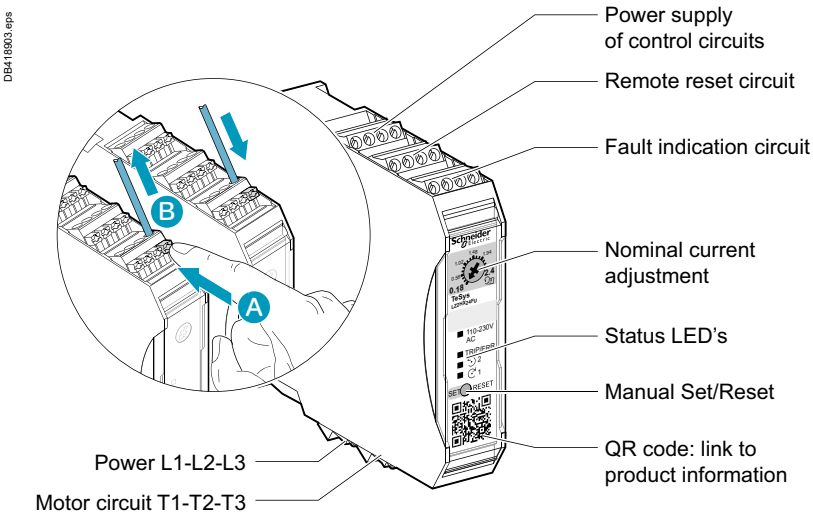

STEP	ACTION
1	Lift the cover on the front of the Hybrid motor starter to access the SET/RESET button.
2	Press and hold down the SET/RESET button for at least 6 seconds. After 6 seconds the 110-230 V AC or 24 V DC LED flashes once.
3	After the LED has flashed once, release the SET/RESET button.
4	Turn the potentiometer to select a nominal current, and then fine-tune the position until the LEDs indicate the exact nominal current.
5	Press the SET/RESET button to save the selected nominal current. The 110-230 V AC or 24 V DC LED comes on and the other LEDs go off.
6	Drop the cover back over the front of the Hybrid motor starter.

Protection functions

The protection of three - phase motors is ensured against potential faults

- Thermal overload: the motor currents exceed the set value.
- Phase unbalanced: the motor currents differ from each other by more than 33 %
- Phase loss: power missing on one or several phases
- Stall and jam: motor current exceeding 45 A for more that 2 s during starting or running phase - No motor is connected - Motor current is lower that the minimum configurable current for more than 2 seconds, on at least two phases.

For all this detected situations, the Hybrid motor starter will switch off, activate its TRP/ERR LED and fault signaling contact.

Please refer to the “Instruction sheet and User Guide” for more information.

Electrical diagrams for Safety chain applications

Preferred

Electrical life time: 30000000 AC53a electrical cycles

Safety Chain Application for Monitoring Emergency STOP Circuits with Two Channel Inputs and Two Channel Outputs with Preventa XPSAF Safety Processing Device.

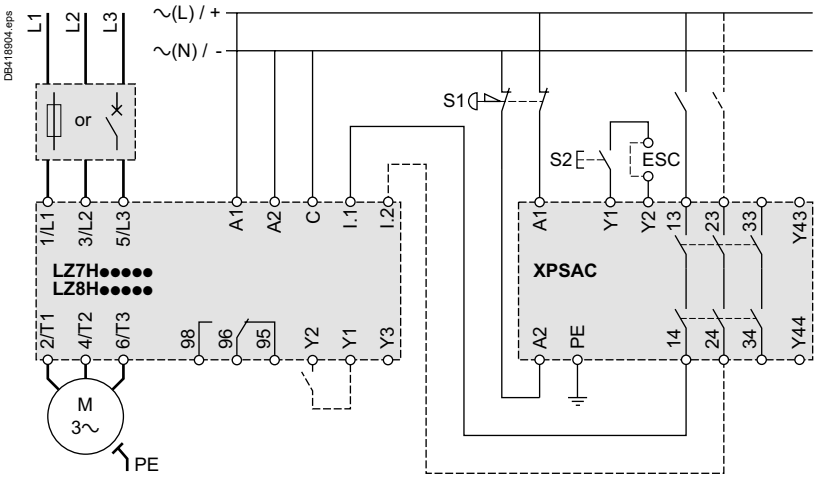

Possible but non- recommended

Electrical life time: 10000 AC53 a electrical cycles

Safety Chain Application for Monitoring Emergency Stop Circuits with Two Channel Inputs and Two Channel Outputs with Preventa XPSAC Safety Processing Device.

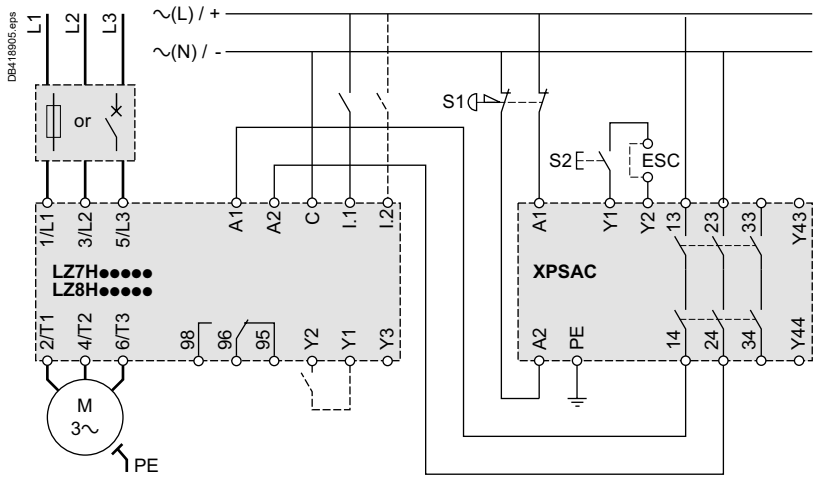

Hybrid motor starters
Ref.

Characteristics

Environment

Rated insulation voltage (Ui)	Conforming to IEC/EN 60947-1, overvoltage category III, degree of pollution: 2	V	500
Rated impulse withstand voltage (Uimp)	Conforming to IEC/EN 60947-4-2	kV	6 (24 V DC control voltage); 4 (110 V - 230 V AC control voltage)
Conforming to standards			IEC / EN 60947-4-2
Product certifications			CE, CUL, ATEX (for failsafe product), CCC, UKCA
Degree of protection	Conforming to IEC / EN 60947-1		IP20
Environment category	Conforming to IEC / EN 60947-1		E
Climatic withstand			Conforming to IEC/EN 60068-2-30
Ambient air temperature around the device	Storage	°C	-40…+80
	Operation (see derating curves)	°C	-25…+70
Maximum operating altitude	without derating	m	2000
	with derating	m	No
Operating positions (see derating curves)	Vertical axis (horizontal DIN rail)		Yes
	Horizontal axis (vertical DIN rail)		Not authorised
Shock resistance 1/2 sine wave = 18 ms	Conforming to IEC/EN 60068-2-27	gn	30 Starter OFF
		gn	30 Starter ON
Vibration resistance 10…150 Hz	Conforming to IEC/EN 60068-2-6	gn	5 Starter OFF
		gn	5 Starter ON
Resistance to electrostatic discharge	Conforming to IEC/EN 61000-4-2	kV	Air discharge: 8 kV
		kV	Contact discharge: 6 kV
Immunity to radiated high-frequency disturbance	Conforming to IEC/EN 61000-4-3		
	80 - 1 GHz	V/m	20
	1.0 - 6 GHz	V/m	10
Immunity to fast transient currents	Conforming to IEC/EN 61000-4-4	kV	3
Immunity to conducted high frequency disturbances	Conforming to IEC/EN 61000-4-6	V	10
Radiated emission and conducted	Conforming to CISPR 11 and EN 55011		Class A
Surge	Conforming to IEC/EN 61000-4-5	kV	1 symmetrical
		kV	2 asymmetrical

Control circuit characteristics

Rated voltage	⎓	V	24
Voltage limits	⎓	V	19.2…30
Voltage dips		ms	3
Short time interruptions		ms	3

Power circuit characteristics

			LZ●2X4●●	LZ●6X5●●
Power dissipation for corresponding Rated Operating Current (see derating curve)		W	0.88 … 4.1	0.88 … 7
Rated Operating Current	AC51 conforming to IEC/EN 60947-4-3	A	0.18 - 2.4	1.5 - 9
	AC53a conforming to IEC/EN 60947-4-2	A	0.18 - 2.4	1.5 - 6.5
Electrical life	AC51	Op	30 000 000 (1)	
		Op	10 000 (2)	
	AC53A	Op	30 000 000 (1)	
		Op	10 000 (2)	
Maximum Operating rate	AC51	Op/h	7200	
	AC53A		See curves	
Time to restart after overload trip	Manual or remote mode	mn	2	
	Automatic	mn	20	

Power and control terminal Characteristics

	Terminal type		Screw M3	Push in
Flexible cable without cable end	1 conductor	mm²	0.25…2.5	0.25…2.5
	2 conductors	mm²	0.25…0.75	
Flexible cable with cable end	1 conductor	mm²	0.25…2.5	0.25…2.5
	2 conductors	mm²	0.25…1.5	0.25…1.5
Solid cable without cable end	1 conductor	mm²	0.25…2.5	0.25…2.5
	2 conductors	mm²	0.25…0.75	
Screwdriver		mm	flat screwdriver: 3 mm	
Tightening torque		N.m	0.5..0.6	

(1) With ON/OFF control through control inputs (I_1, I_2 terminals) *(2) With ON/OFF control through power supply (A_1, A_2 terminals).*

References: pages A3/6 and A3/7
Description: pages A3/12 and A3/13
Curves: pages A3/16 and A3/17
Dimensions, schemes: page A3/18

Characteristics

System conditions

Database for failure rates		SN 29500
System type		Type B
Standard used		IEC 61508
Beta factor		1 %
Mean time to failure (MTTF) at an ambient temperature 40 °C		39.3 (LZ7H or LZ8H 24 V DC) 39.1 (LZ7H or LZ8H 110/230 V AC)

Safe torque-off

		LZ7H or LZ8H 24 V DC	LZ7H or LZ8H 110/230 V AC
Ambient temperature	°C	40	40
Mean time to failure (MTTF)		517	289
Switch-off time		80	100
λsd [FIT] safe, detectable		664	638
λsu [FIT] safe, undetectable		968	935
λdd [FIT] dangerous, detectable		218	388
λdu [FIT] dangerous, undetectable		2.67	6.82
SFF [%] Safe failure fraction		99	99
DCS [%] Diagnostic coverage safe		40.7	40.6
DC [%] Diagnostic coverage		98	98
PFH Probability of dangerous failure per hour		2.67×10^{-9}	6.82×10^{-9}
Safety level		IEC/CEI 61508-1: SIL 3 ISO 13849-1: Category 3 PL e EN 60954-1: Category 3	

Motor overload protection

		LZ7H or LZ8H 24 V DC	LZ7H or LZ8H 110/230 V AC
Ambient temperature	°C	40	40
Mean time to failure (MTTF)		447	273
Time to trip		As for Class 10 A, IEC/CEI 60947-4-2	
λsd [FIT] safe, detectable		637	636
λsu [FIT] safe, undetectable		870	841
λdd [FIT] dangerous, detectable		239	402
λdu [FIT] dangerous, undetectable		17	17
SFF [%] Safe failure fraction		99	99
DCS [%] Diagnostic coverage safe		42.3	43.1
DC [%] Diagnostic coverage		93	95
Safety level		IEC/CEI 61508-1: SIL 2	

References: pages A3/6 and A3/7
Description: pages A3/12 and A3/13
Curves: pages A3/16 and A3/17
Dimensions, schemes: page A3/18

Overload protection tripping curve at 20 °C

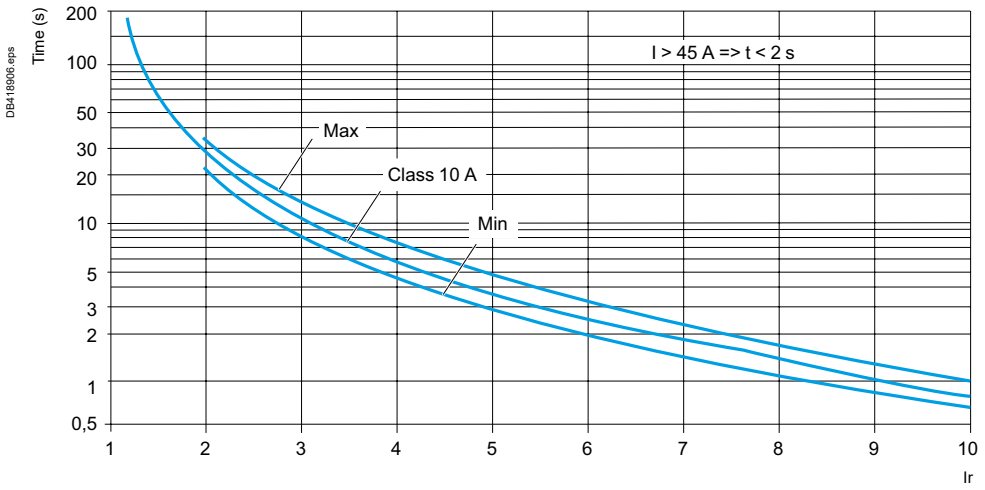

Derating curves: maximum load current (In)

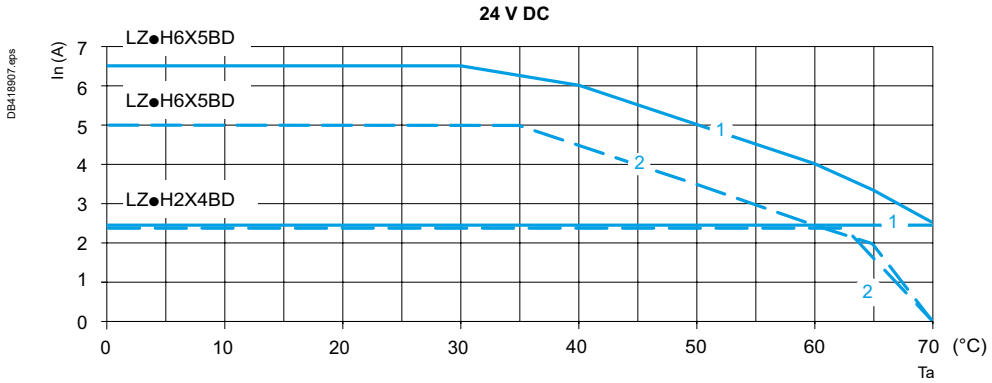

Derating according:
- motor starter control power supply
- ambient temperature (Ta)
- distance between devices 1: 20 mm, with spacing
  2: without spacing.

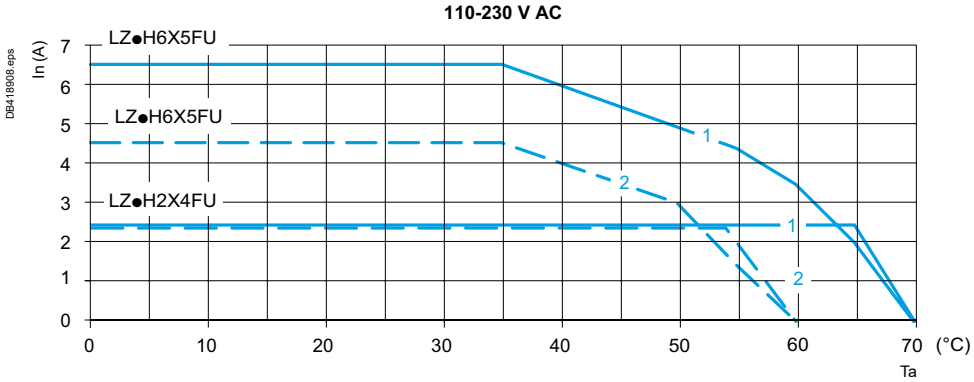

Minimum duty cycle t/T (%) versus cycle duration T (s)

Due to the effect of the peak current on the H monitoring circuit during the starting time, a stop/start sequence should not occur before a certain amount of time. The diagrams below show the minimum duty cycle according the total period for 2 typical starting time values.

With a starting time = 100 ms

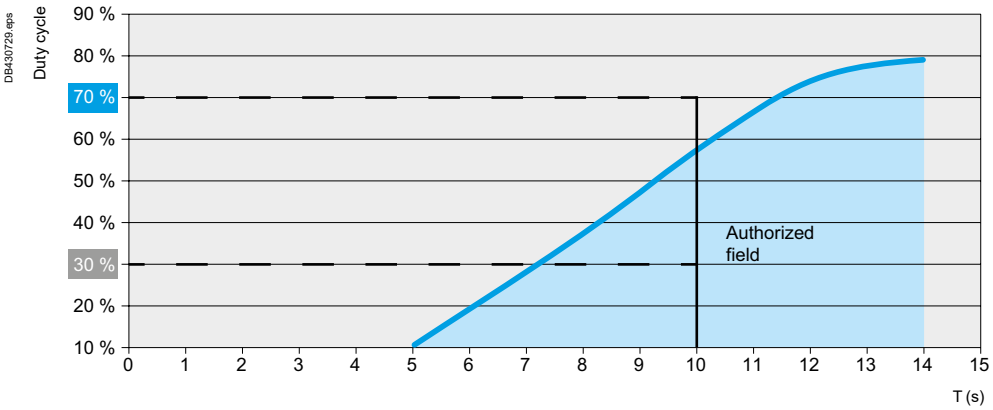

Example for starting time of 100 ms with period T = 10 s.

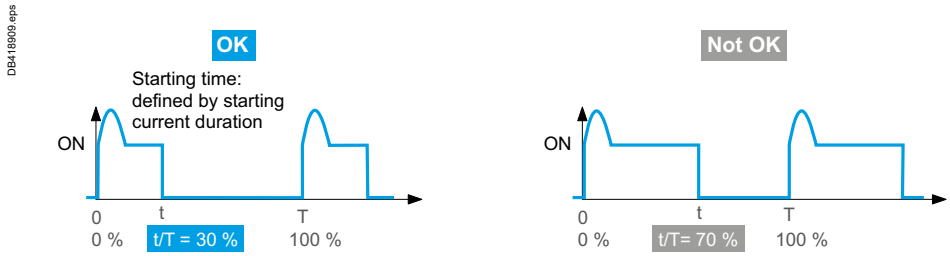

With a starting time = 150 ms

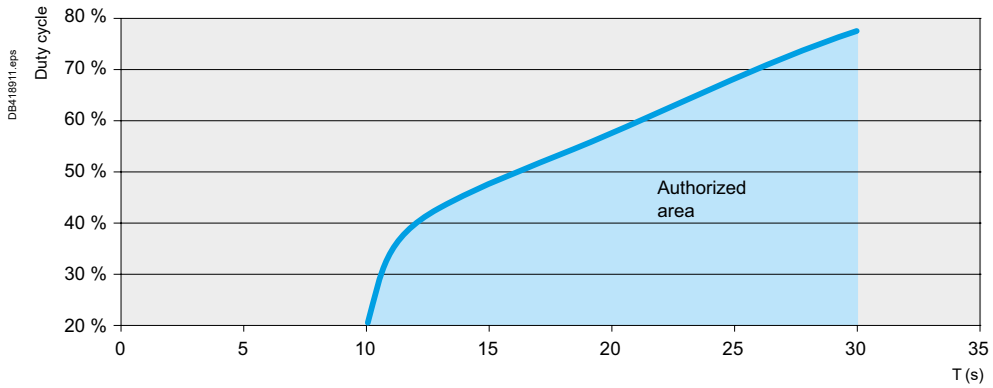

Hybrid motor starters
Ref.

Dimensions, schemes

Dimensions mm

LZ•H•••••

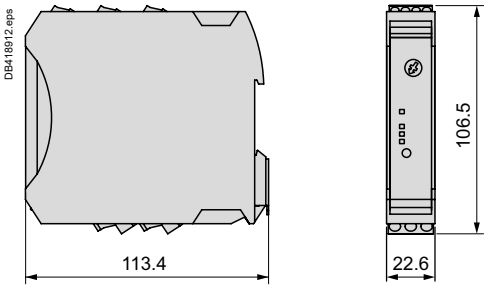

LZ•H•••3••

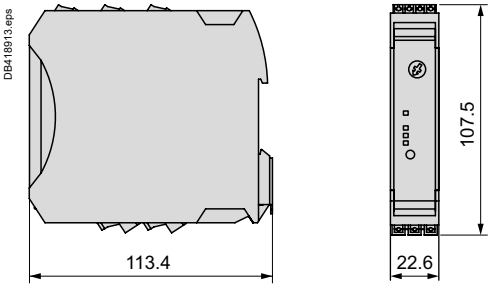

Wiring diagrams

Motor control by standard starter

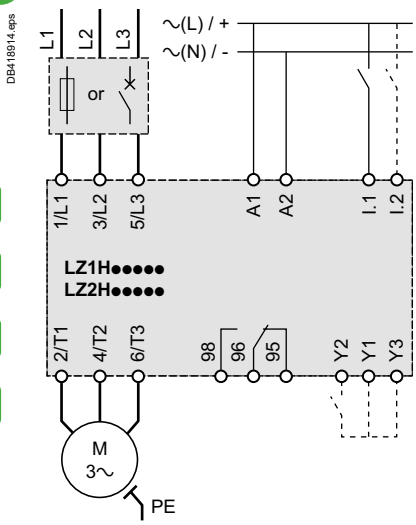

Motor control by safety starter

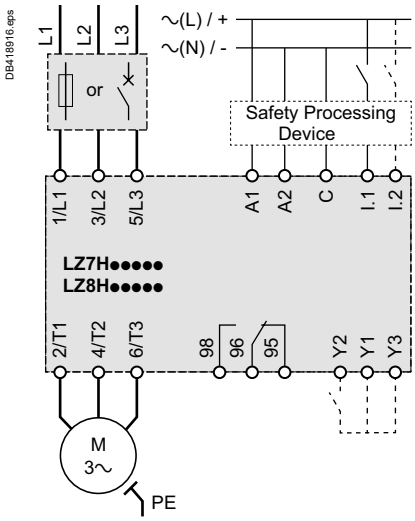

Power terminals

T1, T2, T3	*Motor connection*
L1, L2, L3	*Power inputs*

Control terminals

A1, A2	*Auxiliary power unit*
I.1	*Control input, direction 1*
I.2	*Control input, direction 2 (LZ2H and LZ8H only)*
C	*Control inputs common point (LZ7H and LZ8H only)*
Y1	*Reset mode, common point*
Y2	*Reset mode, remote, manual*
Y3	*Reset mode, automatic*
98, 96, 95	*Trip or error signaling contact*

TeSys Control
Ultra motor starters

Introduction			A4/2
TeSys Ultra - Power bases, control modules, connectors			
Type of product	**Range**		**Page**
Standard power base, basic control functionalities Direct and reversing	Up to 18.5 kW		A4/15
TeSys Ultra - Communication components			
Parallel type cabling system Principle and components		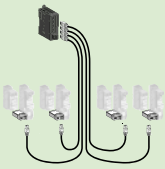	A4/20
Bus type cabling systems Principle, panorama and components		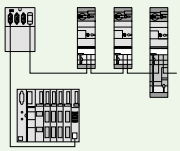	A4/25
TeSys LUFP communication gateway			A4/31
TeSys Ultra - Accessories			
Short circuit current limiter			A4/32
Handles and accessories for rotary control		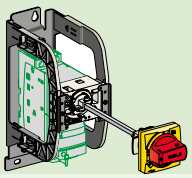	A4/33
Handles and accessories for integration into a MCC drawer		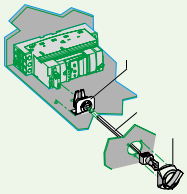	A4/34
TeSys Ultra with Altistart U01 Soft starters and Variable speed controllers			A4/35
Technical Data for Designers			A4/43

From traditional solution to ...

Motor circuit breaker: GV2L

Magnetic protection
> short-circuit protection

Contactor: D

Control
> Start /Stop

Status monitoring
> signaling
> alarm monitoring

Protection relay: LRD

Thermal protection
> overload

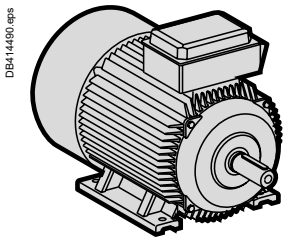

...Ultra motor starter

Ultra motor starter

> All basic or advanced protection and control functions in one block

and more...

> Overload indication and alarm

> Status report, remote control via communication bus

Ultra motor starters

can be used in

80 %

of motor protection and control applications.

1 All in one

- Optimising space in enclosures.
- Total coordination (No contact welding on short circuit).
- Reduces installation times.

2 Simplicity of choice

- Controlled power.
- Protection functions ensured.
- Signaling functions, communication with PLC ensured.

3 Universal mounting

- On DIN rail or grid.

4 Conventional project design

- Conventional control scheme with start , stop push buttons.

5 Electrically simple

Basic scheme of a Ultra starter-controller

- Protection and power control functions acting on a single set of contact (QF1).
- The control unit (CU) monitors the voltage and current. In case of fault, it releases the coil, causing tripping.
- The coil is controlled by manual orders from an operator. Automatic control from a PLC is achieved with other diagrams.

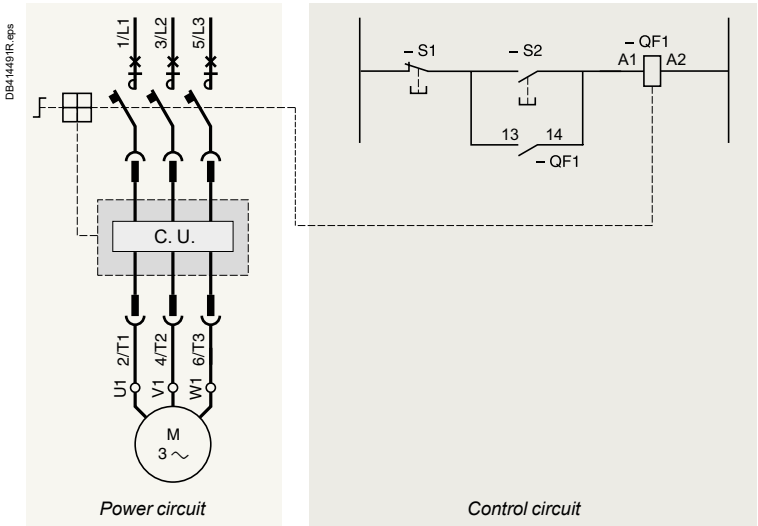

Life Is On Schneider Electric

Motor up to
- 7.5 kW / 1-phase 230 V / 50-60 Hz.
- 18.5 kW / 3-phase 400-440 V / 50-60 Hz.
- 18.5 kW / 3-phase 500 V / 50-60 Hz.
- 22 kW / 3-phase 690 V / 50-60 Hz.
- Non-reversing or reversing.

Common characteristics

Short-circuit protection

■ Isc:
□ 50 kA at ≤ 400 V
□ 10 kA at 500 V
□ 4 kA at 690 V.
■ Up to 690 V AC.

Overload protection

■ From 0.15 to 38 A, 6 setting ranges (tripping 14.2 x I setting).
■ Test button.
■ Adjustment lock.
■ Coil choice: 24 V, 48…72 V, 110...240 V DC/AC.

3 power contacts

■ For non-reversing (reversing with reverser block).
■ Imax, for 12 A power base (direct - reversing):
□ 12 A at up to 500 V / 50 Hz
□ 9 A > 500 V, up to 690 V.
■ Imax, for 38 A power base (direct - reversing):
□ 38 A at up to 500 V / 50 Hz
□ 21 A > 500 V, up to 690 V.

1 NO contact
1 NC contact

■ 5 A / max. 690 V AC or 250 V CC.

Other monitoring contacts

■ 5 A / max. 690 V AC or 250 V DC.

Communication modules

■ Modbus,
■ CANopen,
■ Advantys stb,
■ AS-interface.

Dimensions

■ Base:

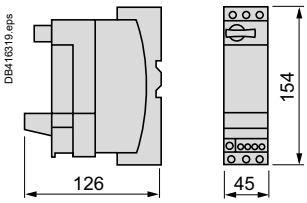

■ Base + reverser block:

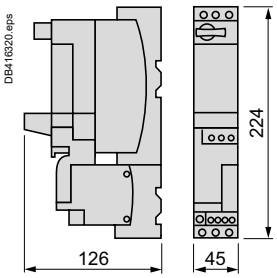

DB414493.eps

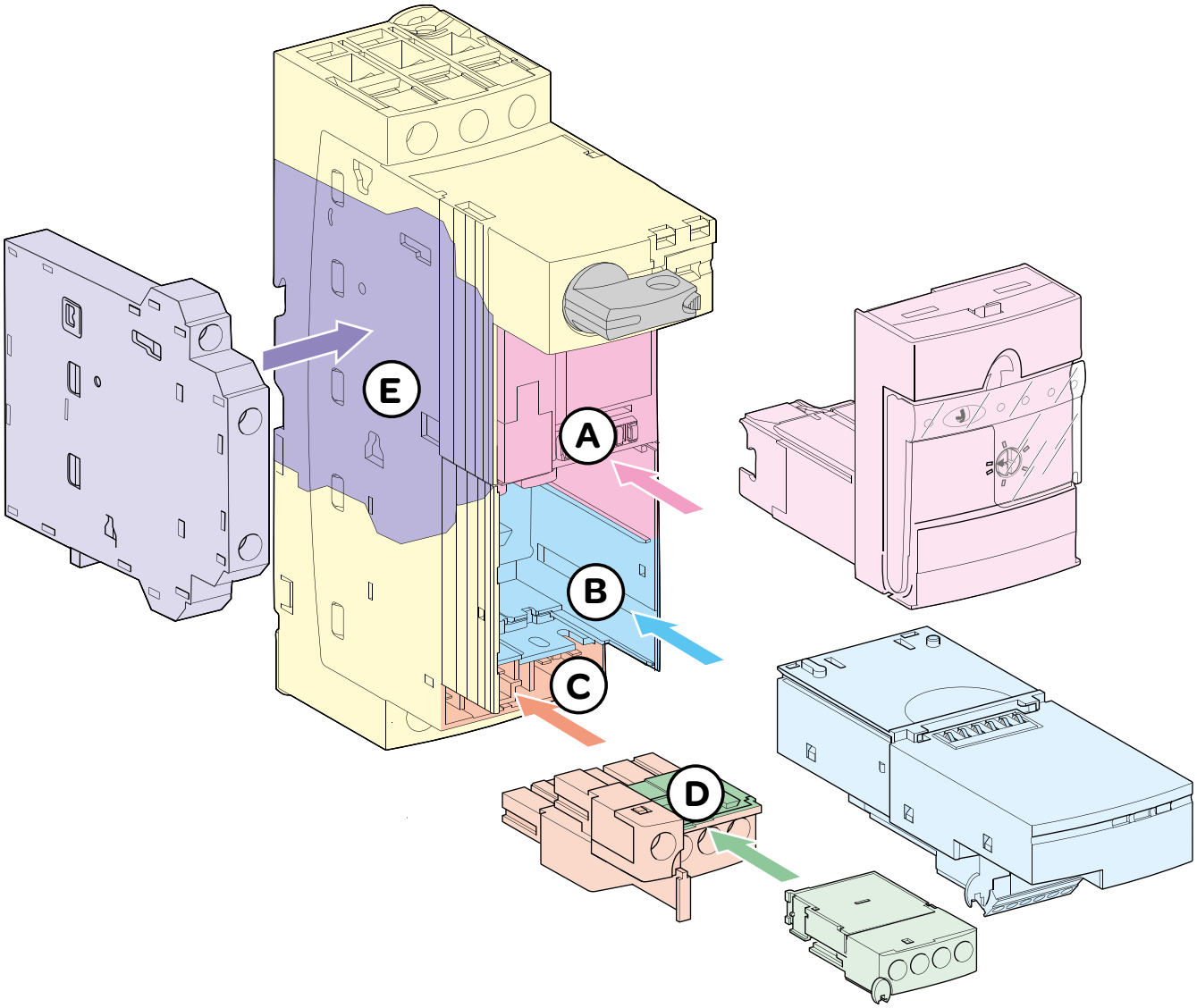

The modularity principle

- Power base
- (A) Cavity for control unit
- (B) Cavity for auxiliary module
- (C) Cavity for control terminal block
- (D) Cavity for additional contact block or shutter
- (E) Space for additional block fastening

Power Base

This is the basic constituent of the motor starter, it is composed of the power contacts, the control coil, the opening / closing mechanism of the protection device and the control pad.

Additional lateral block

Composed of the protection device signaling contacts.

Control unit

Composed of the power base management processor and setting knobs.

Auxiliary module

Depending on its type, it integrates load status contacts or a communication processor or an alarm processor.

Control terminal block

It is composed of two terminals "coil control", 1 NO auxiliary contact, 1 NC auxiliary contact. It can be eventually connected to an auxiliary communication module via a dedicated cable.

Additional block

It includes protection device additional signaling contacts. By default, this is a simple shutter.

Life Is On | Schneider Electric

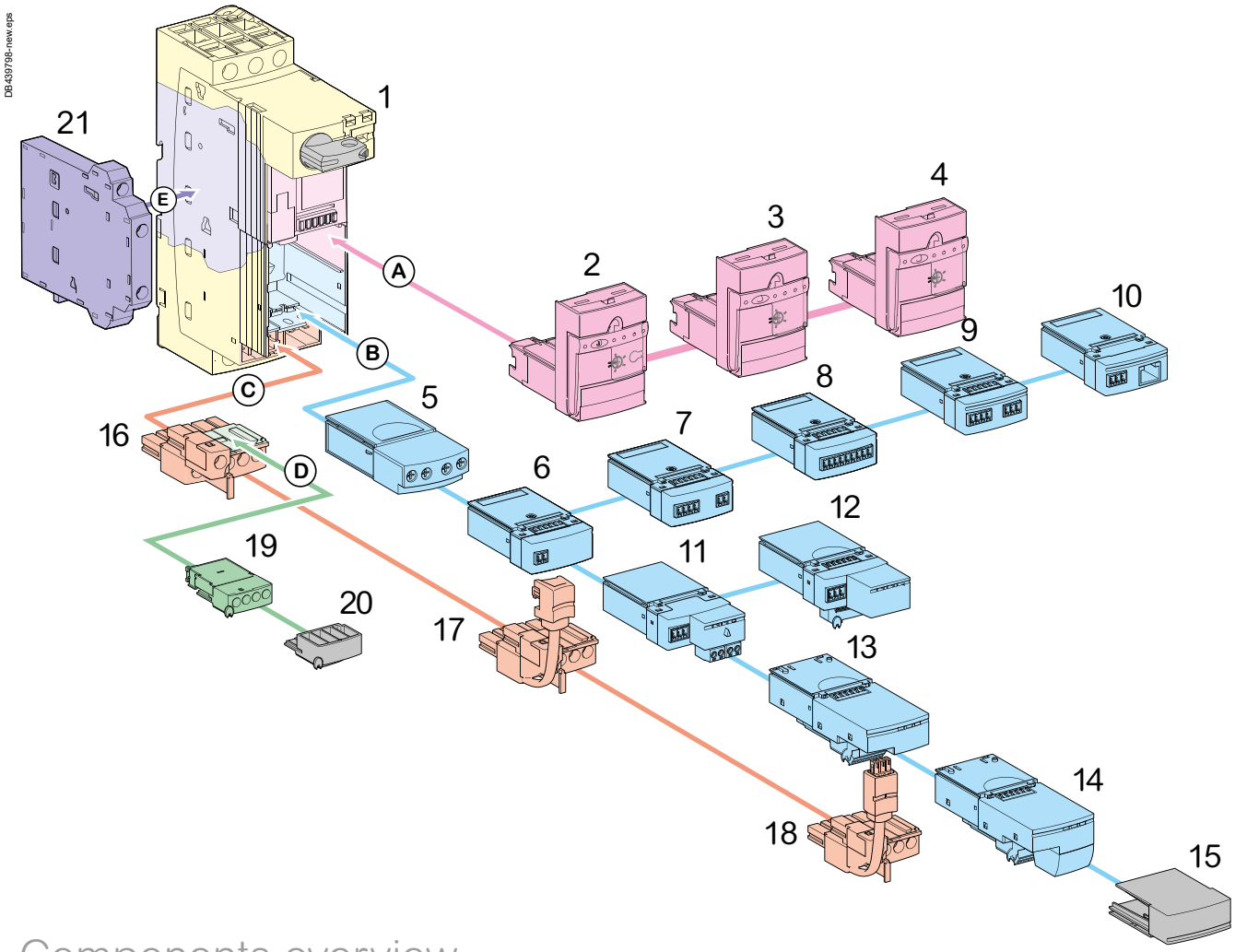

Components overview

Power base

1- LUB
Non reversing power base - 1 rotation direction

Control units

2- LUCB/LUCC/LUCD
Advanced control units

3- LUCA
Standard control unit

4- LUCL
Magnetic protection control unit

Auxiliary module

5- LUFN
Auxiliary contacts module

Load monitoring auxiliary modules

6- LUFW10
Overload alarm module

7- LUFDH11
Overload alarm module with manual reset

8- LUFDA01/LUFAD10
Overload alarm module with automatic reset/remote reset

9- LUFV2
Motor load indication module

Communication auxiliary modules

10- LUFC00
Telefast parallel liaison module, with RJ45 connector

11- ASILUFC5/ASILUFC51
AS-Interface c. m.

12- LULC033
Modbus c. m

13- LULC08 CANopen c. m.

14- LULC15 Advantys STB c. m.

Shutters

15- LU9C1
Shutter for module cavity

20- Shutter for contacts additional block cavity

Control terminal blocks

16- LU9BN11
Terminal block for embedded auxiliary contacts

17- LU9BN11C
Coil terminal block with its connecting cable

18- LU9BN11L
Coil terminal block with its connecting cable

Additional contacts blocks

19- LUA1
Additional contacts

21- LUA8
side-mounting additional contacts

DB414495R.eps

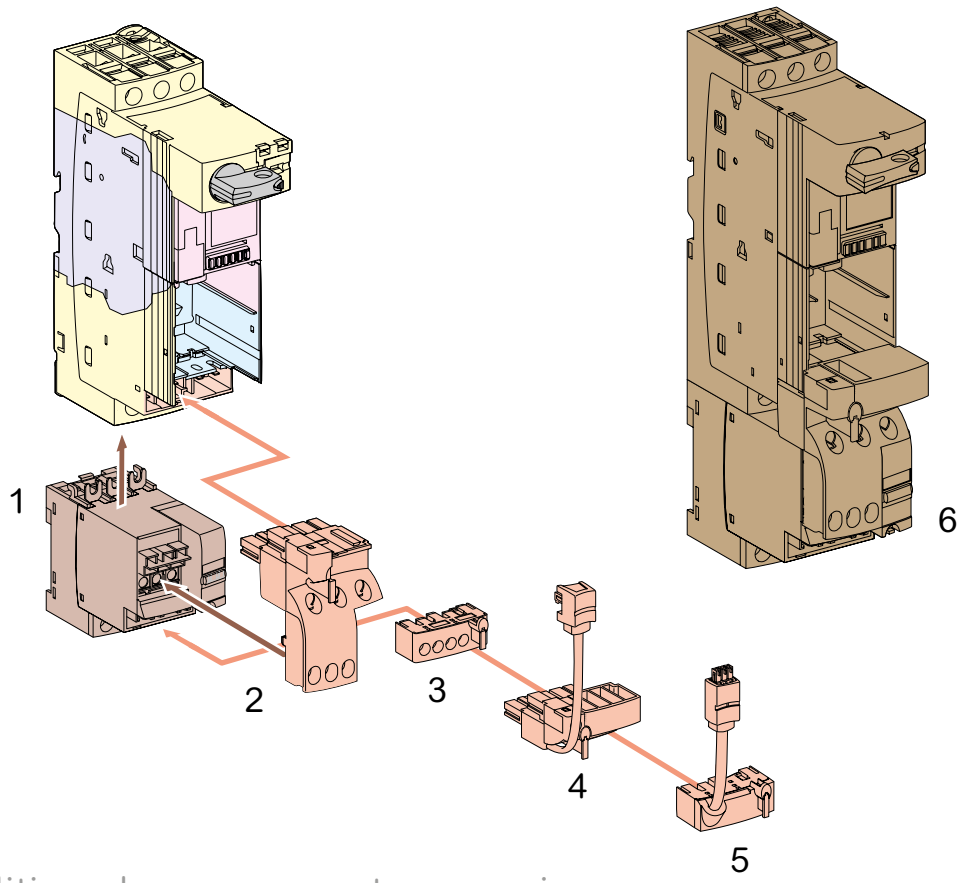

Additional components overview

Reverser block

1- LU2MB0●●
vertical-mounting reverser block

Evoluting reversing power base

6- Pre-assembled reversing power base **LU2B12**

Control terminal blocks

2- LU9MR1C
Base/block assembling connector, with terminal block for embedded auxiliary contacts

3- LU9M1
Coil terminal block for wired control

4- LU9MRC
Coil terminal block with its connecting cable for communicating control (only compatible with a selection of com. modules).

5-LU9MRL
Coil terminal block with its connecting cable for communicating control (only compatible with a selection of com. modules).

Life Is On Schneider Electric

DB414497.eps

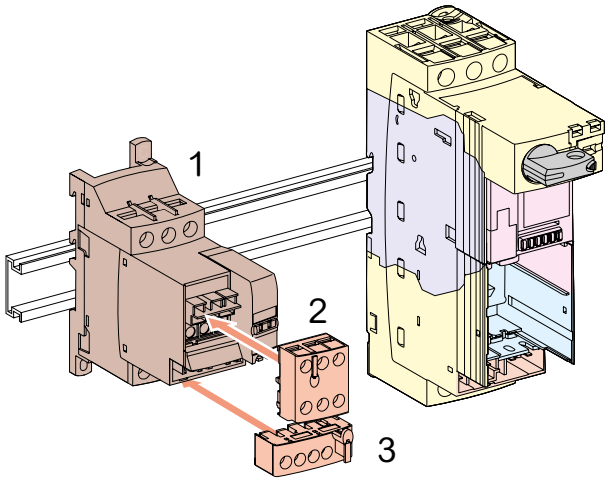

Additional components overview

Reverser block

1- LU6MB0●●
Side-mounting reverser block

Terminal blocks for electrical remote control

2- LU9MR1
Terminal block for 2 direction control (pulse or maintained control)

3- LU9M1
Terminal block for power base coil interlocking. With direction of rotation monitoring contacts

Quick Selection Guide: 1-way Starter

The TeSys Ultra motor starter is integrated, making it simple to choose and install. It consists of a control unit snapped in a power base.
TeSys Ultra can be configured to fit specific applications as well.
Optional accessories include a reverser, a current limiter, predictive maintenance options, and communication options.
For detailed information about TeSys Ultra, visit our website.

LUB12_Image.eps

1. Power Base

+

LUCA05BL_Image.eps

2. Control Unit

+

3. Optional Accessories
(Type E Line Spacer, Function Modules, Auxiliary Contacts etc.)

=

TeSys Ultra Motor Starter

LUB12_Image.eps

Power Base LUB12

LUB120_Image.eps

Power Base LUB120

LUCA05BL_Image.eps

Control Unit

Selecting TeSys™ Ultra Motor Starters in Three Steps

Step 1. Select Power Base (Three different bases up to 38 A)

Control Connection	Max. Current (A)	Maximum Horsepower Ratings						Self-Protected Starter Base
		Three-Phase				Single-Phase		Catalog Number
		200 V	230 V	460 V	575 V	115 V	230 V	
With non-removable screw terminations	12	3	3	7.5	10	0.5	2	**LUB12**
	32	10	10	20	25	2	5	**LUB32**
	38	10	10	25	30	-	-	**LUB38**
Without screw terminations	12	3	3	7.5	10	0.5	2	**LUB120** (1)
	32	10	10	20	25	2	5	**LUB320** (1)
	38	10	10	25	30	-	-	**LUB380** (1)

Step 2. Select Control Unit (2)

Setting Range (A)	Standard 3-phase Magnetic only (3)	Standard 3-phase Class 10 trip (3)	Advanced 3-phase Class 10 trip (3)	Advanced single-phase Class 10 trip (3)	Advanced 3-phase Class 20 trip (3)
0.15...0.6	**LUCLX6●●**	**LUCAX6●●**	**LUCBX6●●**	**LUCCX6●●**	**LUCDX6●●**
0.3...1.4	**LUCL1X●●**	**LUCA1X●●**	**LUCB1X●●**	**LUCC1X●●**	**LUCD1X●●**
1.25...5.0	**LUCL05●●**	**LUCA05●●**	**LUCB05●●**	**LUCC05●●**	**LUCD05●●**
3...12	**LUCL12●●**	**LUCA12●●**	**LUCB12●●**	**LUCC12●●**	**LUCD12●●**
4.5...18	**LUCL18●●**	**LUCA18●●**	**LUCB18●●**	**LUCC18●●**	**LUCD18●●**
8...32	**LUCL32●●**	**LUCA32●●**	**LUCB32●●**	**LUCC32●●**	**LUCD32●●**
9.5...38	**LUCL38●●** (4)	**LUCA38●●**	**LUCB38●●**	**-**	**LUCD38●●**

Voltage Codes

Coil voltage (V)	24 ⎓	24 ∼	48...72 ⎓ or ∼	110...220 ⎓ and 110...240 ∼
Code	**BL** (5)	**B**	**ES**	**FU**

(1) For use with reversing modules or communication modules with prewired connector.
(2) The control unit contains solid-state overload relay and control power source for TeSys Ultra. For more details on the different control units, their functions, and placement on the power base, see Power Base and Plug-in Accessories, page A4/12.
(3) Complete the catalog number by adding appropriate code from Voltage Codes Table (for example, LUCAX6FU).
(4) With BL or FU code only.
(5) DC voltage with range of 0.90 to 1.10 of nominal.

Characteristics: pages A4/44 to A4/46, A4/54
Curves: pages A4/56 to A4/59
Dimensions: pages A4/60 and A4/61
Schemes: pages A4/62 to A4/70

Quick Selection Guide: 1-way Starter

Step 3. Select Auxiliary Contacts (optional)

LUFN20_Image.eps

Auxiliary Contact

	Terminals	Contact Indicates	Contact Normal Status	Contact State for Each Mode (1)						Catalog Number
				Off	Ready	Run	Short Circuit Trip	Overload Trip (Manual Reset)	Overload Trip (Remote/Auto Reset) (2)	
	Auxiliary Contact Blocks									
	Screw	Ready condition	N.O.	O	I	I	O	O	I	**LUA1C11**
		Fault condition	N.C.	I	I	I	O	O	I	
		Ready condition	N.O.	O	I	I	O	O	I	**LUA1C20**
		Fault condition	N.O.	O	O	O	I	I	O	
	Auxiliary Contact Function Modules									
	Screw	Pole state	2 N.O.	O	O	I	O	O		**LUFN20**
			1 N.O. and 1 N.C.	O I	O I	I O	O I	O I		**LUFN11**
			2 N.C.	I	I	O	I	I		**LUFN02**

Accessories

Accessory	Quick Description	For details & selection, see:
Current limiter	Increases the breaking capacity to 130 kA to 460 V and to 65 kA to 575 V	page A4/14
Reverser	Stacked or side mounted (LU6MB0●●● only)	page A4/13
Phase barrier	Required for use as a self-protected combination starter (UL 508 Type E)	page A4/32
Function modules	Fault differentiation, thermal overload, motor load indication	page A4/14 and A4/18
Communication modules	Integrates into existing networks, major portocols are available	page A4/19
Soft starter + TeSys Ultra	Use Altistart U01soft starter with TeSys Ultra	page A4/35
Powerbus	Use TeSys Ultra with a prewired system	page B2/2
Configuration and connection accessories	SoMove software, bus bar, external handle	page A4/31

(1) I indicates closed contact; O indicates open contact.
(2) Requires advanced control unit plus fault differentiation module LUFDA10.

Quick Selection Guide: 1-way Starter

Control Units and Functions

	Standard	Advanced	
Reference	**LUCA**	**LUCB**	**LUCC**
Protection type			
Class 10			
Class 20			
Class 5–30			
Single Phase: LUCC Class 10 only			
Protection functions			
Short circuit			
Over current			
Thermal overload			
Phase loss			
Phase imbalance			
Ground fault			
Underload, long start, jam			
Control functions			
Manual reset			
Automatic or local/remote reset			
Fault differentiation			
Thermal alarm			
Motor load display			
Fault history			
Alarm threshold adjustment			
Tripping test			

= built-in the control unit

= works with the related function modules (see pages A4/14 and A4/18)

Power Base and Plug-in Accessories

See below where to install accessories on the power base. Only one accessory can be installed in each location.

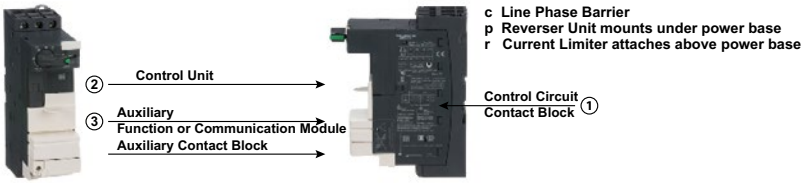

Characteristics:
pages A4/47 to A4/49, A4/55

Curves:
pages A4/56 to A4/58

Schemes:
page A4/62 to A4/70

Life Is On Schneider Electric

Quick Selection Guide: 2-way Starter

LU9SP0_TeSys_360.eps

Phase Barrier

LU2B12BL_Image.eps

Reverser Unit Assembled under the Power Base

TeSys™ Reversing Starters

Power Base with Reversing Unit assembled under the base

Control Connection	Max. Current (A)	Maximum Horsepower Ratings						Self-Protected Starter Base
		Three-Phase				Single-Phase		Catalog Number
		200 V	230 V	460 V	575 V	115 V	230 V	
With screw terminations	12	3	3	7.5	10	1.5	2	**LU2B12** (1)
	32	10	10	20	25	2	5	**LU2B32** (1)
	38	10	10	25	30	-	-	**LU2B38** (1)

Select Control Unit Options (2) (3)

Setting Range (A)	Standard Three-Phase Class 10 trip (4)	Advanced Three-phase Class 10 trip (4)	Advanced single-phase Class 10 trip (4)	Advanced Three-phase Class 20 trip (4)
0.15...0.6	**LUCAX6●●**	**LUCBX6●●**	**LUCCX6●●**	**LUCDX6●●**
0.3...1.4	**LUCA1X●●**	**LUCB1X●●**	**LUCC1X●●**	**LUCD1X●●**
1.25...5.0	**LUCA05●●**	**LUCB05●●**	**LUCC05●●**	**LUCD05●●**
3...12	**LUCA12●●**	**LUCB12●●**	**LUCC12●●**	**LUCD12●●**
4.5...18	**LUCA18●●**	**LUCB18●●**	**LUCC18●●**	**LUCD18●●**
8...32	**LUCA32●●**	**LUCB32●●**	**LUCC32●●**	**LUCD32●●**
9.5...38	**LUCA38●●**	**LUCB38●●**	-	**LUCD38●●**

Voltage Codes

Volts (V)	24	110…240
DC	**BL** (5) (6)	-
AC	**B**	-
DC or AC	-	**FU**

Reversing Modules for Field Addition

Mounting	Catalog No.	Wiring Adapter
Beneath	**LU2MB0**	**LU9MR1C**
Beside	**LU6MB0**	**LU9MR1**

***Note**: For LU2MB0 and LU6MB0, voltage code required; must match control unit.*

(1) Voltage code required.
(2) The control unit contains solid-state overload relay and control power source for TeSys Ultra. For more details on the different control units, their functions, and placement on the power base, see Control Units and Functions, page A4/12.
(3) Control units for 4.5...18 and 8...32 can be used only with 32 A rated power bases (LUB32, LUB320, and LU2B32).
(4) Complete the catalog number by adding the appropriate code from (for example LUCAX6FU).
(5) DC voltage with range of 0.90 to 1.10 of nominal.
(6) Voltage code to use for a power base with a communication module.

TeSys™ Ultra Accessories

Current Limiter (1) (2)

Accessory	Application	Technical Data	Mounting	Cat. No.
Current limiter/ isolator	Additional current limiting aspects for the starter	130 kA at 460 V 65 kA at 575 V	Direct mounting to LUB● and LU2B●	**LUALB1**
Limiter cartridge	Replacement cartridge for LUALB1	130 kA at 460 V 65 kA at 575 V	–	**LUALF1**

Function Modules (1) (3)

Module	Description	For use with:	Operation Requirements	Cat. No.
Fault differentiation: with manual reset (thermal overload) with auto reset	Provides indication between an overload trip and a short circuit trip.	Advanced control units only	24–250 V AC/V DC (power from control unit)	**LUFDA10**
Thermal overload pre-alarm	Signals when the motor current reaches 1.05 of the full load setting on the control unit.	Advanced control units only	24–250 V AC/V DC (power from control unit)	**LUFW10**
Motor load indication	Provides a signal proportional to the average currents in the three phases divided by the full load current setting of the control unit. The output corresponds to a load status of 0–2 times the full load setting of the control unit.	Advanced control units	4–20 mA (requires separate 24 V DC power supply)	**LUFV2**
Parallel wiring	Provides a convenient way to reduce control wiring and allow for connecting starters to a communications network by providing 24 Vdc for the starters.	Advanced control units (24 V DC only) and LU9BN11C or LU9MRC prewired connector	LU9G02 splitter box and PLC network	**LUFC00**

PB121259.eps

Alarm Differentiation

PB121255.eps

Motor Load Indicator

PB121260.eps

Parallel Wiring

(1) See page A4/12 for placement on the power base.
(2) Increases the breaking capacity of the motor starter.
(3) Offers customization for specific application requirements.

Ultra motor starters

Characteristics:
pages A4/50 to A4/54

Schemes:
pages A4/62 to A4/63

Life Is On Schneider Electric

Product references

1 direction:
LUB12, LUB32, LUB38

1 direction:
LUB120, LUB320, LUB380
** LU9BN11: Terminal block for embedded auxiliary contacts to be ordered separately.*

2 direction:
LU2B12●●, LU2B32●●, LU2B38●●

LU9MR1C

LU2MB0●●

LU9M1

LU6MB0●●

LU9MR1

Power bases (in kW)

Ultra starters are composed with separate elements: power component + control units + auxiliary components.
The power base includes the electro mechanical parts. It is selected according to:
- Motor power to be handled
- Number of direction of rotation to be controlled: 1 or 2
- Type of control to be achieved: Basic or Advanced.

Basic control
1- direction rotation control
2 - direction rotation control
Overload + Short circuit protection
Main power monitoring
Status signaling contacts

Advanced control
Functions of basic control
+ Digital display of electrical values
+ Overload alarms
+ Network/bus communication

Function	Max motor standard power (400 V)	Lip_in (400 V)	References	
	kW	A	Basic ctrl	Advanced ctrl
	5.5	12	**LUB12**	**LUB120**
1-direction rotation	15	32	**LUB32**	**LUB320**
	18.5	38	**LUB38**	**LUB380**
	5.5	12	**LU2B12●●** (1)	**LUB120 + reverser block ass.**
2-direction rotation	15	32	**LU2B32●●** (1)	**LUB320 + reverser block ass.**
	18.5	38	**LU2B38●●** (1) (2)	**LUB380 + reverser block ass.**

(1) Replace the 2 dots by the coil voltage code below – AC is 50-60 Hz.
(2) With BL or FU code only.

Coil voltage (V)	24 ⎓	24 ∿	48...72 ⎓ or ∿	110...220 ⎓ and 110...240 ∿
Code	**BL**	**B**	**ES**	**FU**

Please check the availability of your variant in the index page A4/40. The SEARCH function of your viewer can be used.

Reverser blocks - assemblies

A reverser block assembly has to be added to the power base (LUB120 to 380) to build an 'Advanced control' with '2-direction of rotation' Ultra starter.
Reverser blocks with 2 mounting possibilities:
- vertical mounting– mounted aspect: refer to LU2B12, 32, 38
- side mounting, on a Din rail.

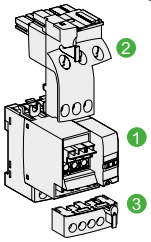

Vertical mounting

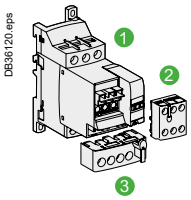

Side mounting

Blocks	References	
	Vertical mounting	Side mounting
1 Reverser block	**LU2MB0●●** (1)	**LU6MB0●●** (1)
2 Aux. contacts connector	**LU9MR1C**	**LU9MR1**
3 Coil supply connector	**LU9M1**	**LU9M1**

(1) Replace the 2 dots by the coil voltage code below – AC is 50-60 Hz.

Coil voltage (V)	24 ⎓	24 ∿	48...72 ⎓ or ∿	110...220 ⎓ and 110...240 ∿
Code	**BL**	**B**	**ES**	**FU**

Main technical characteristics

Power bases
1-direction power base overall dimensions (HxWxD) : 154 x 45 x 126 mm
2-direction power base (assembly with vertical mounting reverser block) overall dimensions (HxWxD): 224 x 45 x 126 mm
Power bases are delivered with protective blanking plates.

3 power poles, for connections of a 1-phase or 3-phase motor
Screw clamp power terminals, for up to 2 x 6 mm² conductors
Screw clamp control terminals, for up to 2 x 1.5 mm² conductors

LUB12,32,38 embedded terminals:
- coil supply,
- NO (13-14) contact (for control push button)
- NC (21-22) contact (for control push button).

Additional signaling contact modules provide more possibilities.

Reversing assemblies
LU2MB0, LU6MB0:
3 power poles, for connections of a 1-phase or 3-phase motor, screw clamp power terminals, for up to 2 x 6 mm² conductors
LU9 connectors: screw clamp control terminals, for up to 2 x 1.5 mm² conductors

LU2MB0●●, LU6MB0●● provide terminals for power circuits.
LU9MR1C, LU9MR1 provide signalling contact terminals (82-81-84) that indicate the direction of rotation.
LU9M1 provides coil supply terminals (A2-A1-A3) and 2 NO contact terminals (A1-B1, A3-B3) for direction control.

Characteristics: pages A4/44 to A4/46, A4/54
Curves: pages A4/56 to A4/59
Dimensions: pages A4/60 and A4/61
Schemes: pages A4/62 to A4/70

LUCA, LUCB, LUCC, LUCD, LUCL series.
Ex.: LUCA05BL

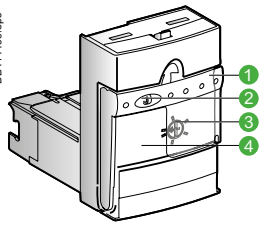

LUCA●●●●

1. Extraction and locking handle.
2. Sealing of locking handle.
3. Ir adjustment dial.
4. Locking of settings by sealing the transparent cover.

Ultra starters are composed with separate elements: power component + control units + auxiliary modules.The control unit includes electronic components and the current adjustment dial. The control unit is selected according to:
- Motor power to be handled.

Type of protection: thermal+magnetic or magnetic only.

Control units for power bases with basic control

LUCA - thermal + magnetic (standard) units

- Protection against overload: 14.2 x Ir (setting current).
- Protection against short circuit: 13 x Ir max (max setting current).
- Protection against missing or unbalanced phases.
- Protection against insulation fault (protection of equipment only).
- Class 10 tripping.
- Frequency 50...60 Hz.

LUCL - magnetic units

- Protection against short circuits.
- To be used when a standard power base is connected to a motor drive or a soft starter, as they provide the overload protection.

*Note: both **LUCA** and **LUCL** units can be used in the advanced power bases **LUB120** and **LUB320**.*

Maximum standardized power ratings of 3 phases motors 50/60 Hz				Lip_in mounting on the power base - Rating	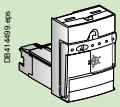 Control unit product reference (1)	
400/440 V	500 V	690 V	Setting range			
kW	kW	kW	A	A	Thermal + magnetic	Magnetic
					LUCA	LUCL
0.09	-	-	0.15...0,6	12 and 32	**LUCAX6●●**	**LUCLX6●●**
0.25	-	-	0.35...1,4	12 and 32	**LUCA1X●●**	**LUCL1X●●**
1.5	2.2	3	1.25...5	12 and 32	**LUCA05●●**	**LUCL05●●**
5.5	5.5	9	3...12	12 and 32	**LUCA12●●**	**LUCL12●●**
7.5	9	15	4.5...18	32	**LUCA18●●**	**LUCL18●●**
15	15	18.5	8...32	32	**LUCA32●●**	**LUCL32●●**
18.5	18.5	22	9.5...38	38	**LUCA38●●** (2)	**LUCL38●●** (2)

(1) Replace the 2 dots by the coil voltage code below – AC is 50-60 Hz.
*(2) With **BL** or **FU** code only.*

Coil voltage (V)	24 ⎓	24 ∿	48...72 ⎓ or ∿	110...220 ⎓ and 110...240 ∿
Code	**BL**	**B**	**ES**	**FU**

Please check the availability of your variant in the index page A4/40. The SEARCH function of your viewer can be used.

Characteristics:
pages A4/47 to A4/49, A4/55
Curves:
pages A4/56 to A4/58
Schemes:
page A4/60

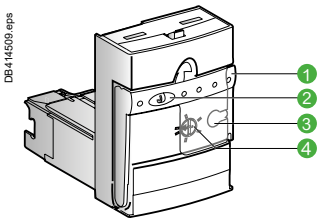

LUCB●●●●, LUCC●●●●, LUCD●●●● control units

1. Extraction and locking.
2. Handle sealing of locking.
3. Handle
4. Ir adjustment dial test push button.

Control units for power bases with advanced control

LUCB, LUCC, LUCD control and diagnostic units

Motor protection, fault diagnostic.
Protection against
- overload: 14.2 x Ir (setting current).

Simulation of an overload by depressing the test push button.
- short circuit: 13 x Ir max (max setting current).
- missing or unbalanced phases.

Overload alarm management:
- locally: with one of the LUF family module
- Remotely: with LULC031, LULC033, LULC07, LULC08, LULC09 or LULC15 (thermal alarm only) communication module.

Reset:
- manual
- automatic, with a communication module

LUCB32BL

Maximum standardized power ratings of 3 phases motors 50/60 Hz				Setting range	Lip_in mounting on the power base - Rating	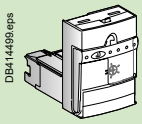 Protection type: - overload - short-circuit - Main power fault - alarm		
400/440 V		500 V	600 V					
kW		kW	kW	A	A	Class 10	Class 10	Class 20
1P	3P	3P	3P			3P	1P	3P
-	0.09	-	-	0.15...0.6	12 and 32	**LUCBX6●●**	**LUCCX6●●**	**LUCDX6●●**
0.09	0.25	-	-	0.35...1.4	12 and 32	**LUCB1X●●**	**LUCC1X●●**	**LUCD1X●●**
0.55	1.5	2.2	3	1.25...5	12 and 32	**LUCB05●●**	**LUCC05●●**	**LUCD05●●**
2.2	5.5	5.5	9	3...12	12 and 32	**LUCB12●●**	**LUCC12●●**	**LUCD12●●**
4	7.5	9	15	4.5...18	32	**LUCB18●●**	**LUCC18●●**	**LUCD18●●**
7.5	15	15	18.5	8...32	32	**LUCB32●●**	**LUCC32●●**	**LUCD32●●**
18.5	18.5	22	9.5...38	38		**LUCB38●●** (1)		**LUCD38●●** (1)

Cial. ref. of the control unit: replace dots by the coil code.

Please check the availability of your variant in the index page A4/40. The SEARCH function of your viewer can be used.

Coil voltage (V)	24 ⎓	24 ∿	48...72 ⎓ and 48 ∿	110...220 ⎓ and 110...240 ∿
Coil code	**BL**	**B**	**ES**	**FU**

(1) With BL or FU code only.

Ultra motor starters

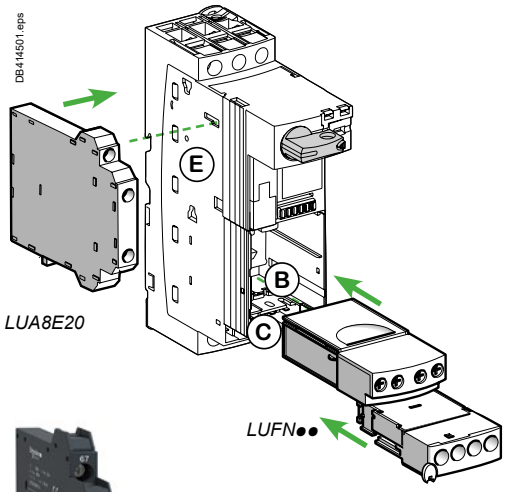

LUA8E20

LUFN02

LUA1C20

Signaling module and blocks

They provide dry contacts of Normally Open (NO) or Normally Closed (NC) type for signaling purpose. The monitored status can be either the motor running status or the protection device status, depending on the commercial reference of the module or block.

Common electrical characteristics

Standard operating voltage: 24…250 V AC/DC.
Maximum current: 5 A.

Compatibility - Positioning

The signaling module and blocks can be use in any power base
LUA8E20 is clipped on the E side of the power base
LUFN11, LUFN02, LUFN02 inserted into B cavity
LUA1C20, LUA1C11 inserted into C cavity
Note: B and C cavities may be already used for reverser-starter, communication.

Signaling module and blocks	Output	References
Module *Motor running status: ON / OFF*	1 NO + 1 NC	**LUFN11**
	2 NC	**LUFN02**
	2 NO	**LUFN20**
Block *Protection status: OPEN / CLOSED (OF) STANDBY / TRIPPED (SD)*	2 NO	**LUA1C20**
	1 NO + 1 NC	**LUA1C11**
Side block *Protection status: OPEN / CLOSED (OF)*	2 NO	**LUA8E20**

LUFV2

LUFW10

LUFDH11

LUFDA01

LUFDA10

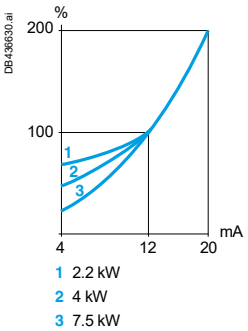

LUFV2 typical response curve

Function modules

They provide analog output or dry contacts of Normally Open (NO) or Normally Closed (NC) type for measurement or signaling purpose.

Common electrical characteristics

Standard operating voltage: 24…250 V AC/DC.
Maximum current: 5 A.

Compatibility - Positioning

The function modules can only be used in a LUB120, LUB320 or LUB380 power base, in cavity B.

Function modules	Output type	References
Electrical value: average current in each phase. The signal is the image of the pourcentage of In. External 24 V DC power supply needed	Analog: 4-20 mA	**LUFV2**
Contact closes if average current in the phases = 105 % of In	1 NO	**LUFW10**
Contacts change state if tripping is caused by overload	1 NO + 1 NC	**LUFDH11**
Contact opens if overload tripping is reset with control pad or remotely	1 NC	**LUFDA01**
Contact closes if overload tripping is reset with control pad or remotely	1 NO	**LUFDA10**

Characteristics:
pages A4/50 to A4/54

Schemes:
pages A4/62 to A4/63

PB121260.eps

LUFC00

Auxiliary parallel wiring module [1]

Auxiliary parallel wiring module for Modicon Telefast system

Inputs

They collect the FWD, REV controls from an automation process.
An RJ45 parallel port is used, for connection to the 24 V DC outputs of a PLC.

Outputs

They give the position of the control pad and the state of the poles,
They provide 24 V DC controls to the LUB120, 320 or 380 power base coil via the LU9BN11C adapter (A2, A1) or to the LU2B12, 32, 38 power base coil with a LU9MRC adapter (A2, A1, A3).

Compatibility - Positioning

The parallel wiring module can only be used in any Ultra power base,
with LUC●●● control unit with coil voltage
Compatible with:
- Modicon TM3 (map I/O controllers for RJ45 M221, M241, M25)
- Modicon STB modules (I/O for automation island)
- Modicon Telefast (interfaces RJ45/HE10).

The parallel wiring module is inserted in cavity B.

*Note: the parallel wiring module must be connected to a **LU9G02** or **LU9G03** Telefast distribution*
Note: more details on parallel wiring page A4/20.

Designation	References
Ultra power base parallel wiring module	**LUFC00**

PB121261.eps

LULC033

PB121262.eps

ASILUFC51

PB121290.eps

LULC15

Communication modules

Communication modules

These modules send the control pad position and pole state to a communicating system (PLC, monitoring system,…)
They collects the Forward, Reverse motor controls from an automation process.
The status and controls are coded according to an industrial communication protocol, depending on the communication module.
Bus cable connection, external power supply by crew clamp terminals.
Connector for coil control (to A1-A3-A2) via a prewired connection (LU9BN● for 1-direction control, LU9MR● for 2-direction control)

Compatibility - Positioning

The communication modules can only be used in a LUB120, LUB320 or LUB380 power base, in cavity B.

Designation	References
Ultra Modbus communication module	**LULC033**
Ultra AS-Interface communication module	**ASILUFC51**
Ultra CANopen communication module	**LULC08**
Ultra Advantys STB communication module	**LULC15**

Note: more details on bus-type communication page A4/25.

PB121264.eps

LU9BN11C

PB121264.eps

LU9BN11L

Prewired connectors

They provide the necessary electrical link between a parallel or communication module and the coil supply connector, on the power base or reverser block. Thus, ON-OFF (1 direction) or FORWARD-REVERSE (2 direction) controls can be achieved.

Prewired connection			References	Compatibility with modules
1 direction	Short cable	Side connection	**LU9BN11C**	**LUFC00, LULC033, ASILUFC51**
		Bottom connection	**LU9BN11L**	**LULC08, 15**
2 direction	Long cable	Side connection	**LU9MRC**	**LUFC00, LULC033, ASILUFC51**
		Bottom connection	**LU9MRL**	**LULC08, 15**

PB121266.eps

LU9MRC

PB121267.eps

LU9MRL

Introduction:
pages A4/20 to A4/23, A4/25 to A4/26

Characteristics:
pages A4/27 to A4/29, A4/51 to A4/55

Schemes:
pages A4/63 to A4/64

Introduction

Point-to-point wiring

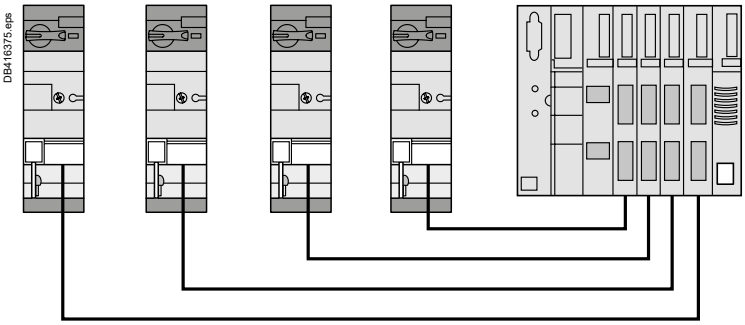

■ The control inputs and signaling outputs of the starter are grouped in a single socket, usually RJ45.
They are individually connected to PLC outputs and inputs.
■ The wires run in parallel in a multicore cable equipped with a multipin connectors, RJ45 in the case of Telefast type system.
■ 3 parallel wiring systems are available:
□ Modicon TM3, based on a RJ45 I/O module for M221, M241, M25 PLC
□ Modicon STB, based on I/O modules for automation island
□ Modicon Telefast: RJ45 / HE10 interfaces.
■ Simple way of proximity wiring. Quick cabling.
It is suitable for machine control panels when a large number of Ultra starter-controller are installed.

informations

■ The control and signaling terminals of the starters are connected to the output and input terminals of a PLC. No specific connectors or cables are required.
■ Conventional wiring mode, without optimization of the cabling time.
May be suitable when a very small number of starters is used, with a very small number of links.

Parallel cabling systems

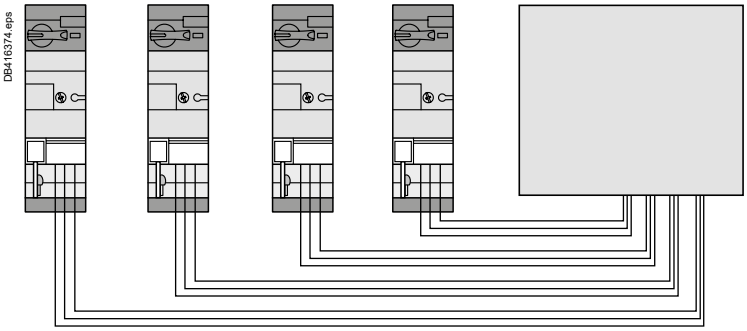

Life Is On Schneider Electric

Integration in the Modicon TM3 wiring system

The Ultra starter-controller are directly connected to a I/O module equipped with RJ45 connectors.

1. Modicon M221, M241, M251 PLC's
2. TM3XTY I/O module for 4 starters
3. LU9R●● cables with RJ45 connectors,
4. LUFC00 module for TeSys Control parallel connection (1 or 2 direction of rotation).

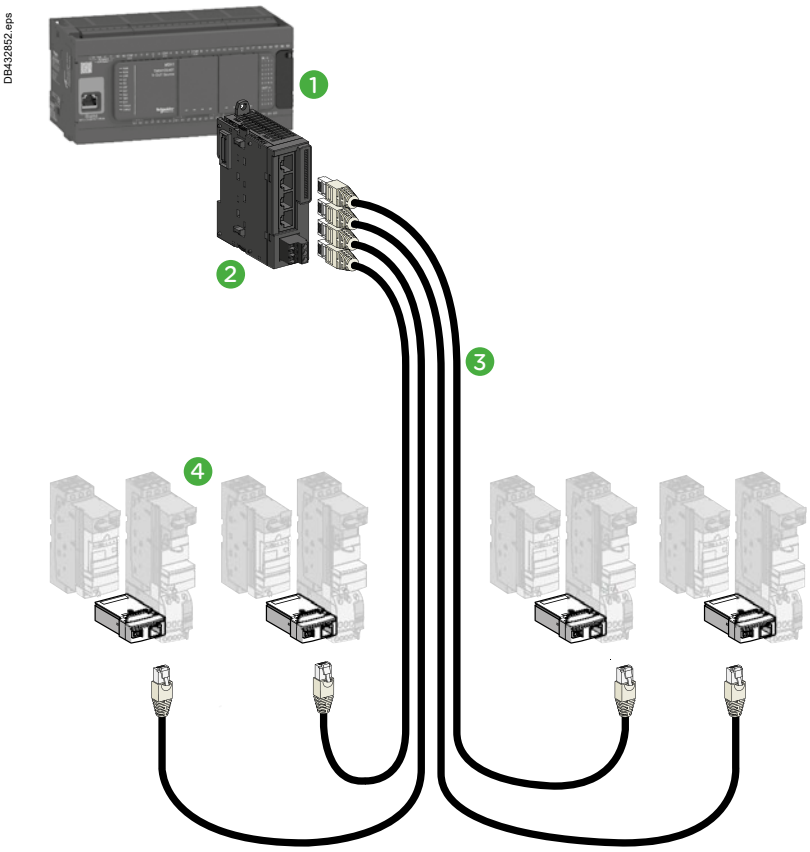

Integration in the Modicon Advantys STB system

Advantys STB is a solution for remote I/O modules.

These communicate with the Modicon PLCs range thanks to a serial liaison, using the Advantys STB protocol.

In this example an Advantys I/O module is used to facilitate wiring.

Each of its four terminals receives a pre-assembled RJ45 cable connected to a Ultra starter-controller.

1. Ultra LUB120, 320 or 380 power base (equipped with 24 V DC LUC●●●●BL control modules)
2. TeSys Control module for parallel RJ45 wiring: LUFC00 + LU9BN11C (one direction) or LU9MRC (2 directions for LU2B12, 32 or 38 power base)
3. RJ45 cables (2 connectors):
   ⩽ 3 m: LU9R●●
   > 3 m: 490 NTW000●● (5, 12, 40 or 80 m)
4. PLC: Modicon range
5. I/O Modicon Advantys module: STBEPI2145K

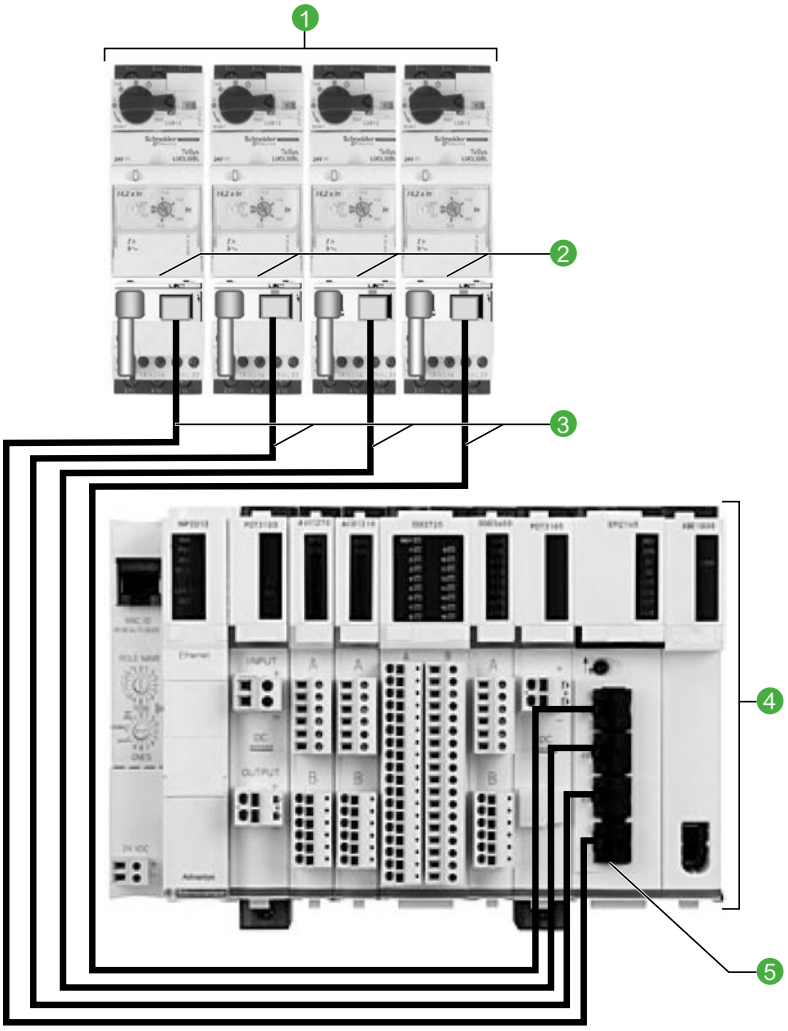

Life Is On Schneider Electric

Integration in the Modicon Telefast system

The wiring hubb **LU9G0●** facilitates the connection to Modicon Premium PLCs.
It adapts RJ45 connectors to HE10 available on the Telefast I/O modules.
Connection: up to 8 Ultra per hub.

1. Ultra LUB120, 320 or 380 power base (equipped with 24 V DC LUC●●●●BL control units)
2. TeSys Control module for parallel wiring RJ45: LUFC00 + LU9BN11C (one direction) or LU9MRC (2 directions for LU2B12, 32 or 38 power base)
3. RJ45 cables (2 connectors):
   ⩽ 3 m: LU9R●●
   > 3 m: 490 NTW000●● (5, 12, 40 or 80 m)
4. Telefast RJ45 / HE10 splitter box: LU9G02 or LU9G03 (different Ultra connection capacities)
5. HE10 cables (2 connectors): TSXCDP●●●
6. PLC: Modicon Premium range
7. I/O module: TSXDMY28FK

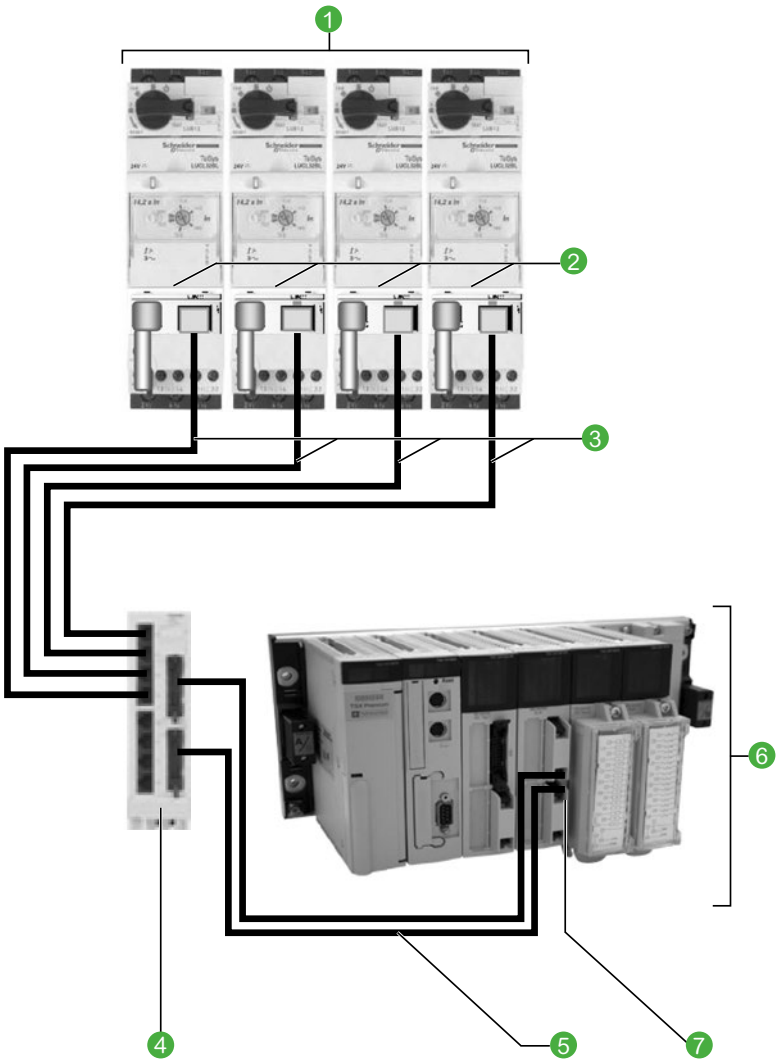

Product references

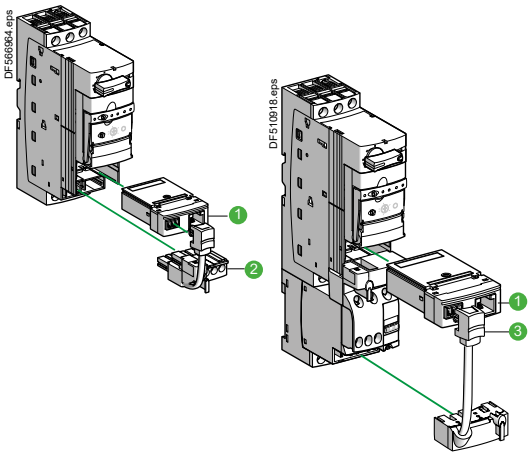

Components for connection of a starter - 1 direction of rotation	
Designation	**Reference**
1 Parallel connection module, RJ45 output 2 coil control inputs, 3 signal outputs	**LUFC00**
2 Pre wired connector, one direction of rotation, for LUB120, 320 or 380 power base coil connection and one contact for emergency stop	**LU9BN11C**

Components for connection of a starter - 2 directions of rotation	
Designation	**Reference**
1 Parallel connection module, RJ45 output	**LUFC00**
3 Pre wired connector, 2 directions of rotation, for LU2B12, 32 or 38 power base coil connection and one contact for emergency stop	**LU9MRC**

LU9G02 *LU9G03*

Telefast RJ45/ HE10 splitter box	
Designation	**Reference**
Splitter box Connection to U: 4 RJ45 connectors: for 1 to 4 U, 1 or 2 directions 4 RJ45 connectors: for 1 to 4 U, 1 direction Connection to PLC: 1 x HE10 connector - 20 channels, for pole status, alarms 1 x HE10 connector - 20 channels, for control. 24 V DC auxiliary power supply required	**LU9G02**
Splitter box Connection to U: 8 RJ45 connectors: for 1 to 8 U, 1 or 2 directions Connection to PLC: 1 x HE10 connector - 20 channels, for pole status, alarms 1 x HE10 connector - 20 channels, for control. 24 V DC auxiliary power supply required.	**LU9G03**

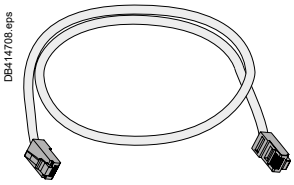

RJ45 cables.

RJ45 connection cables, with 2 RJ45 connectors	
0.3 m	**LU9R03**
1 m	**LU9R10**
3 m	**LU9R30**

HE10 connection cables, with 2 HE10/20 way connectors	
Section: AWG 22 / 0.324 mm²	
0.5 m	**TSXCDP053**
1 m	**TSXCDP103**
2 m	**TSXCDP203**
3 m	**TSXCDP303**
5 m	**TSXCDP503**
Section: AWG 28 / 0.080 mm² (flat cable)	
1 m	**ABFH20H100**
2 m	**ABFH20H200**
3 m	**ABFH20H300**

Cable with stripped wires (PLC side) 1 x HE10/20 ways connector (Splitter box side)	
Section: AWG 22 / 0.324 mm²	
3 m	**TSXCDP301**
5 m	**TSXCDP501**

Characteristics:
page A4/53

Schemes:
pages A4/64 and A4/65

Life Is On Schneider Electric

PB105092.eps

Application functionality, topology

1 Geographically expanded process

Many motors are scattered on the site, the process control requires individual control to ensure safety and proper operation.
Ultra is a suitable communicating actuator. The integration of a bus communication module in the starter-controller saves space in the control board and simplifies wiring, compared to solutions based on conventional components (circuit breaker + contactor).

2 Application: automatic motor control / monitoring

Thanks to a communication bus, starter-controllers are part of an automation system controlled by a PLC and (or) various communicating controllers.
These equipment can then share the status and alarm information related to each motor control and perform specific treatments.

3 Bus- type connection

This type of connection allows different topologies (star, ring ...) and supports various protocols dialogue. It is therefore recommended for geographically expanded process, in order to to simplify wiring and ensure multiple-controller management.

- The bus wiring interconnects Ultra starters controllers and components of the installation via a single the cable.
- Commands and status are coded according to the selected protocol and transmitted on the communication bus.
- This wiring is simple, usually a shielded (or not) pair of wires, suitable for monitored automation, regardless of the number of Ultra and their locations.

DB416376.eps

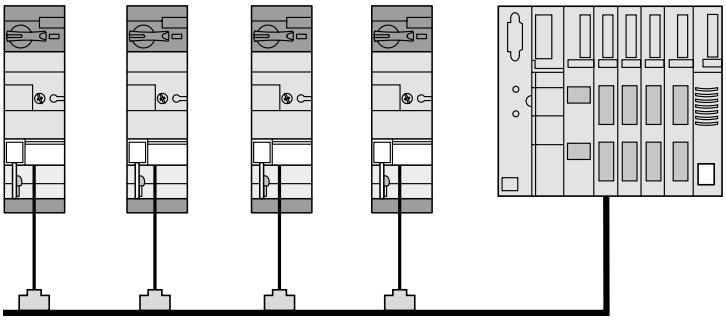

Available Ultra status and controls via a communication module

Control unit	LUCA	LUCB LUCC LUCD
Starter status (ready, running, fault)	■	■
Start and Stop commands	■	■
Thermal overload alarm		■
Remote reset via the bus		■
Indication of motor load		■
Fault signalling and differentiation		■

Network	Architecture	Component references
Modbus		
Details page **A4/29**	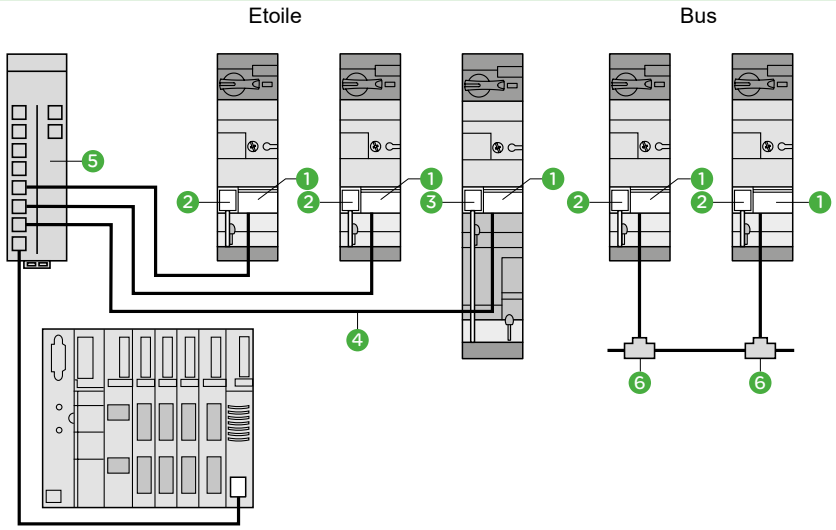	1 LULC033 2 LU9BN11C 3 LU9MRC 4 VW3A8306R●●● 5 LU9GC3 6 VW3A8306TF
Advantys STB		
Starter-controllers communicate using ADVANTYS STB protocol to fit into a remote I/O architecture. Details page **A4/30**	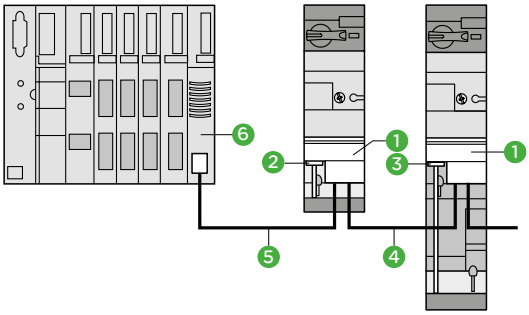	1 LULC15 2 LU9BN11L 3 LU9MRL 4 LU9RDD●●● 5 LU9RCD 6 STBXBE1100

Life Is On Schneider Electric

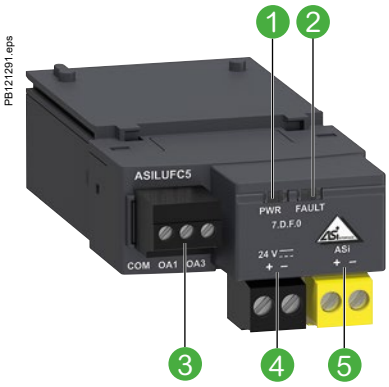

1. Green LED: AS-Interface voltage present
2. Red LED: AS-Interface or module fault
3. Outputs for starter commands
4. Black connector for connection to ⎓ 24 V auxiliary power supply
5. Yellow connector for connection to the AS-Interface system

The ASILUFC5 communication module, combined with the power base and control unit is used to control Ultra starters-controllers via DeviceNet bus.
The LULC09 communication module is slave type.

Module Specifications

I/O terminal block

- Powered by external 24 V DC (power supply not included):
  - 2 x configurable inputs for binary sensors
  - 1 x 24 V DC output - 0.5 A local auxiliary command.

Connectors

- For Ultra 24 V DC coil (common, direction 1, direction 2).
- For AS-Interface bus.

Signaling

- Module Status - Error - 24 V, by LED.

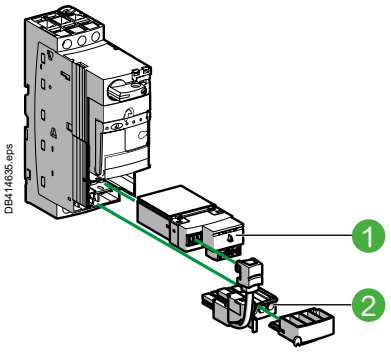

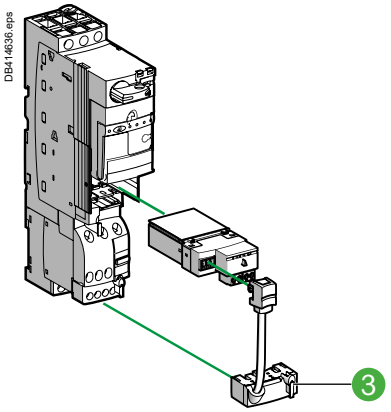

Tesys Control components

Description	Mark	Max number of slaves	References
AS-Interface communication module	1	62	**ASILUFC51**
Pre-wired connector: coil - LUB power base	2	-	**LU9BN11C**
Pre-wired connector: coil - LU2B power base	3	-	**LU9MRC**

Characteristics:
pages A4/51, A4/53, A4/55

Schemes:
pages A4/63, A4/70, A4/68

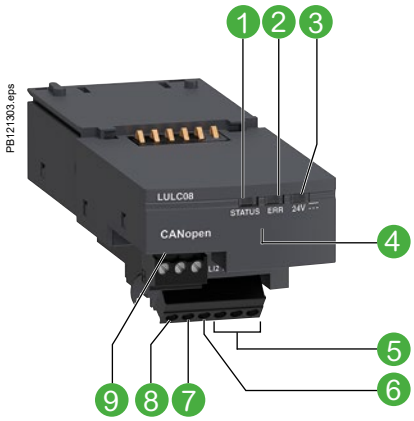

1. LED indicating module status
2. Fault signalling LED
3. LED indicating ⎓ 24 V supply ON for outputs OA1, OA3 and LO1
4. SUB-D connector for bus link
5. ⎓ 24 V supply connection
6. Discrete input
7. Discrete input
8. Discrete output
9. Outputs for starter commands

The LULC08 communication module, combined with the power base and control unit is used to control Ultra starters-controllers via CANopen bus.
The LULC08 communication module is slave type.

Module Specifications

I/O terminal block

- ■ Powered by external 24 V DC (power supply not included):
- □ 2 x configurable inputs for binary sensors
- □ 1 x 24 V DC output - 0.5 A local auxiliary command.

Connectors

- ■ For Ultra 24 V DC coil (common, direction 1, direction 2).
- ■ For CANopen bus.

Signaling

- ■ Module Status - Error - 24 V, by LED.

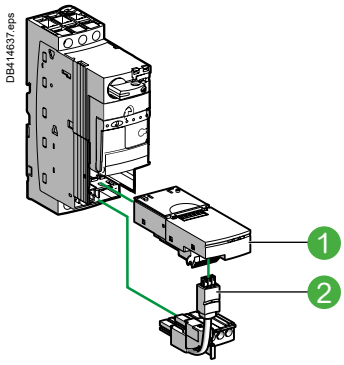

Tesys Control components		
Description	**Item**	**References**
CANopen communication module	1	**LULC08**
Pre-wired connector: coil - LUB power base	2	**LU9BN11L**
Pre-wired connector: coil - LU2B power base	3	**LU9MRL**

Compatibility of CANopen communication module with control units	
LUCA ●●BL / B ●●BL / C ●●BL / D ●●BL	All versions marketed after **2T0481** (1)

(1) This "date code" is made up as follows:
***2T** or **2C**: factory code.*
***04**, **05**, **06** and so on: year of manufacture.*
***08**: week.*
***1**: 1st day of the week.*

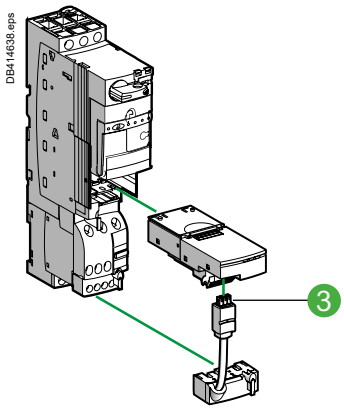

How to get information on the design of a CANopen architecture and the choice of network accessories

Consult the library of downloadable documents on schneider-electric.com by searching on the name of the communication protocol.

Characteristics:
pages A4/52, A4/53, A4/55

Schemes:
page A4/66

Life Is On Schneider Electric

LULC033

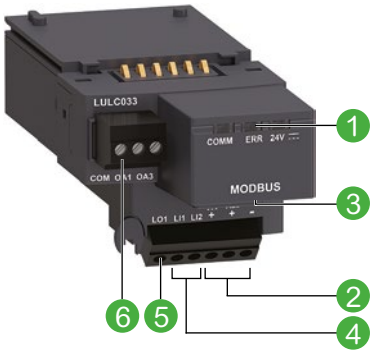

1. Module status signalling LED
2. 24 V supply connection
3. RJ45 connector for RS485 Modbus link
4. 2 discrete inputs
5. 1 discrete output
6. Outputs for starter commands

LULC033 communication module, combined with the power base and control unit is used to control Ultra starters-controllers via Modbus.

Module Specifications

I/O terminal block

- ■ Powered by external 24 V DC (power supply not included):
- □ 2 x configurable inputs for binary sensors (on LULC033 only)
- □ 1 x 24 V DC output - 0.5 A local auxiliary command.

Connectors

For Ultra 24 V DC coil (common, direction 1, direction 2).

- ■ RJ45, For Modbus line.

Signaling

- ■ Module Status - Error - 24 V, by LED.

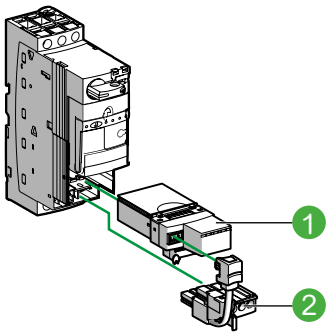

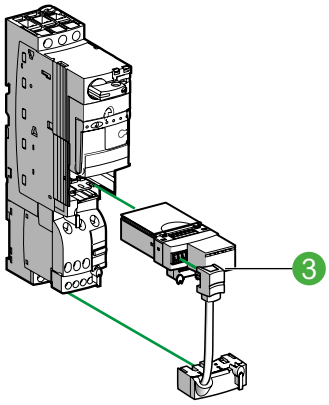

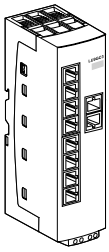

Tesys Control components			
Description	**Item**	**Bin. input**	**References**
Modbus communication module	1	2	**LULC033**
Pre-wired connector: coil - LUB power base	2	-	**LU9BN11C**
Pre-wired connector: coil - LU2B power base	3	-	**LU9MRC**

Modbus hub		
Description	**Length (m)**	**References**
Modbus communication distributor	-	**LU9GC3**
Cables fitted with 2 x RJ45 connectors	0.3	**VW3A8306R03**
	1	**VW3A8306R10**
	3	**VW3A8306R30**
Tees derivations	0.3	**VW3A8306TF03**
	1	**VW3A8306TF10**
Description		**References**
RS 485 line terminator		**VW3A8306R**

Compatibility of Modbus communication modules			
Communication modules (software version)		**LULC033 from V2.1**	**LULC033 from V2.2**
Power base	LUB●● / LU2B●2	■	■
Control unit	LUCA●●BL		■
	LUCB●●BL LUCC●●BL LUCD●●BL		■

How to get information on the design of a Modbus architecture and the choice of network accessories

Consult the library of downloadable documents on schneider-electric.com by searching on the name of the communication protocol.

Ultra motor starters

Characteristics:
pages A4/51, A4/53, A4/55

Schemes:
pages A4/65 and A4/69

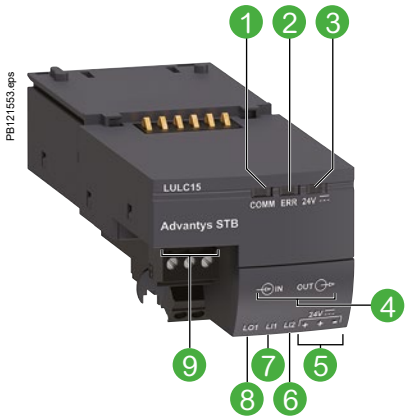

1 Two-colour LED indicating module status
2 Fault signalling LED
3 LED indicating that ⎓ 24 V supply is ON
4 Bus connectors
5 ⎓ 24 V supply connection
6 Discrete input
7 Discrete input
8 Discrete output
9 Outputs for starter commands

Communication module LULC15 allows direct connection of Ultra starter-controllers and controllers on an Advantys STB island, between two segments or at the end of a segment. The starter-controller will then be able to make use of the services provided by Advantys STB: self-addressing, autobaud, fallback positions.

Module Specifications

I/O terminal block

■ Powered by external 24 V DC (power supply not included):
□ 2 x configurable inputs for binary sensors (on LULC033 only)
□ 1 x 24 V DC output - 0.5 A local auxiliary command.

Connectors

■ For Ultra 24 V DC coil (common, direction 1, direction 2).
■ For Advantys STB bus.

Signaling

■ Com - Error - 24 V, by LED.

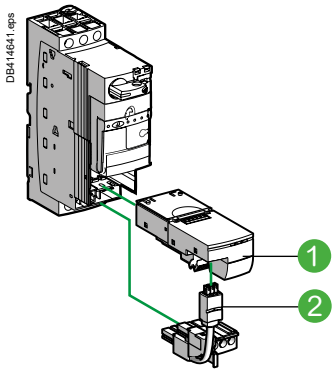

LUB + LULC15 + LU9BN11L

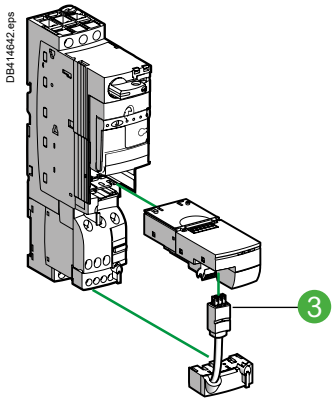

LU2B + LULC15 + LU9MRL

Tesys Control components

Description	Item	References
Advantys STB communication module	1	**LULC15**
Pre-wired connector: coil - LUB power base	2	**LU9BN11L**
Pre-wired connector: coil - LU2B power base	3	**LU9MRL**

Cables

Description	Length (m)	References
Cables fitted with connectors, one straight and one elbowed	0.3	**LU9RCD03**
	1	**LU9RCD10**
	5	**LU9RCD50**
Cables fitted with two straight connectors	0.3	**LU9RDD03**
	3	**LU9RDD30**

Compatibility of Advantys STB communication module with control units

LUCA●●BL / B●●BL / C●●BL / D●●BL	All versions marketed after **2T0481** (1)

(1) This "date code" is made up as follows:
***2T** or **2C**: factory code.*
***04**, **05**, **06** and so on: year of manufacture.*
***08**: week.*
***1**: 1st day of the week.*

How to get information on the design of a Advantys STB architecture and the choice of network accessories

Consult the library of downloadable documents on our se.com website, by searching by the name of the transmission protocol.

Characteristics:
pages A4/52, A4/53, A4/55

Schemes:
page A4/64

Life Is On Schneider Electric

PB121557.eps

LUFP9

Introduction

LUFP communication gateways allow connection between the Modbus serial link and Fipio, PROFIBUS DP or DeviceNet field buses.

After configuration, these gateways manage information which can be accessed by the Modbus serial link and make this information available for read/write functions (command, monitoring, configuration and adjustment) on the field buses.

An LUFP communication gateway consists of a box which can be clipped onto a 35 mm omega rail, allowing connection of up to 8 Slaves connected on the Modbus serial link.

Example of architecture

DF51517.eps

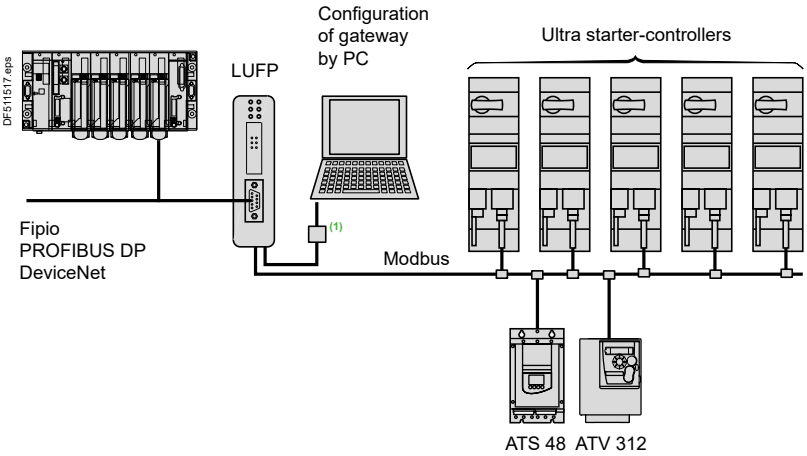

DF526109-17-M.eps

561512.eps

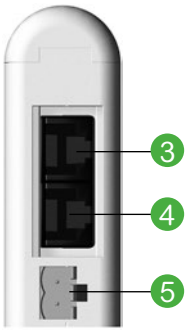

Communication gateway LUFP	
Description	**Reference**
PROFIBUS DP / Modbus gateway	**LUFP7**
DeviceNet / Modbus gateway	**LUFP9**

Description

Front panel of the product

1 LED indicating :
- communication status of the Modbus serial links,
- gateway status,
- communication status of the Fipio, PROFIBUS DP or DeviceNet bus.

2 Connectors for connection to Fipio, PROFIBUS DP or DeviceNet buses.

Underside of product

3 RJ45 connector for connection of the Modbus serial link
4 RJ45 connector for link to a PC
5 ⎓ 24 V power supply

Software set-up

For the Fipio bus, software set-up of the gateway is performed using either PL7 Micro/Junior/Pro software or ABC Configurator software.
For the PROFIBUS DP and DeviceNet buses, software set-up is performed using ABC Configurator.
This software is included in the Ultra user's manual.

(1) Connection kit for PowerSuite software workshop.

Schemes:
page A4/65

DB436115.eps

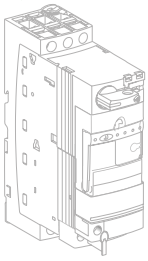

LUALB1

PB123870.eps

LUALF1

PB138227.eps

LA9LB920

Short-circuit current limiter block

To be connected in series and upstream of a Ultra starter-controller. It increases its ability to withstand the short circuit current from 50 kA to 100 or 130 kA under 400 V.

Principle: under the action of a short-circuit, the opening of two contacts of each phase of the limiter creates a resistive arc. The current then decreases to a value tolerable by a Ultra power base.

Limiter blocks and accessories

Description	Breaking capacity Iq (kA)		Ie (A)	Ith (A)	Mounting	Unit reference
	≤ 440 V	690 V				
Limiter-disconnector (1 x LUAFL1 cartridge supplied)	130	70	-	32	Direct on power base up to 15 kW/32 A	**LUALB1** (1)
Limiter	100	35	32	63	Separate	**LA9LB920** (2)
limiter cartridge for LUALB1	130	70	-	-	Limiter-disconnector	**LUALF1**

(1) Must be connected to one power base only.
(2) Can be connected to multiple Ultra power bases in parallel with limitation :
- *Total Ith max 63 A*
- *Total nominal current (Ie) 32 A from motor with simultaneous start (**LA9LB920** could not withstand higher inrush peak current)*

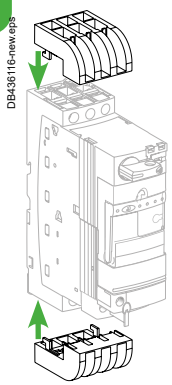
DB436116-new.eps

LU9SP0

Phase barrier

Ensures a complementary electrical insulation between phases.
690 V AC network: compulsory.
440 V AC network: compulsory when assembling a UL508 type E compliant motor starter (Self Protected Starter).

Description	Use	Mounting	Reference
Phase separator	LUB or LU2B 12 or 120 LUB or LU2B 32 or 320 LUB or LU2B 38 LUB380 LUALB1	Live terminals L1, L2, L3	**LU9SP0**

Clip-in labels

Can be clipped on any Ultra power base, on LU6MB0●● inverser block, and Linergy HK busbar system.

Marking accessory

Description	Sold by lot of	Reference per unit
Clip-in label 8 x 18 mm	100	**LAD90**

PB113928.eps

LU9ET1S

Safety-chain identification - Red label

The red sticker is dedicated to Ultra LUCA, LUCB, LUCC, LUCD and LUCL control units.

Description	Reference per unit
Retrofit safety-chain identification sticker	**LU9ET1S**

Characteristics:
page A4/50

Dimensions:
page A4/61

Life Is On Schneider Electric

DB414540.eps

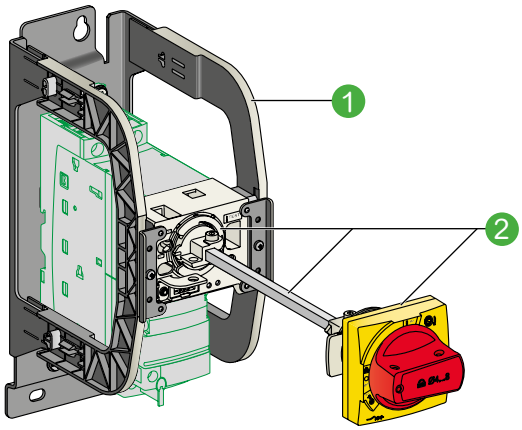

LU9APN21 mounting kit

PB106291.eps

GVAPA1 long shaft

PB121242.eps

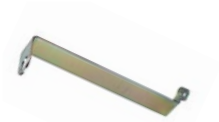

GVAPK12 shaft support plate for deep enclosure

PB106296.eps

GVAPP1 spacer base (retrofit accessory)

PB124003.eps

GVAPR54 red handle, IP 54

PB106297.eps

GVAPL01 "Laser square" plotting tool

Extended rotary handle

Allows a circuit breaker or a Ultra starter-controller installed in back of an enclosure to be operated from the front panel.
The rotary handle can be black or red/yellow, IP54 or IP65. It includes a function for locking the circuit breaker or the starter in the O (OFF) or | (ON) position (depending on the type of rotary handle) by means of up to 3 padlocks with a shank diameter of 4 to 8 mm.
The extension shaft must be adjusted to the depth of the enclosure.
The IP54 rotary handle is fixed with a nut (Ø22) to make it easier to assemble.

Mounting kit

1 Ultra power base bracket; its horseshoe shaped sides hold the rotary mechanism facing the original handle.
2 Mechanism, shaft and handle; the shaft enters the handle attached to the door during closing.

Long shaft

■ to be cut to the required length. Equipped with a connection endpiece.

Shaft support plate for deep enclosure

■ Provides horizontal guiding of the shaft, when the door is open.

Spacer base (retrofit accessory)

■ Fixed on a side of the box, for heightening an GVAP●●● handle.

Handle

■ Delivered as a single unit, to be fitted on a side of the enclosure.
Note: references below are suitable for Ultra power bases after 2004.

"Laser Square" Tool

■ On the principle of an angle extended with a laser beam, the "Laser Square" facilitates tracing the piercing marks on the door or the sides of an enclosure.

"Safety" stickers

■ Marking: Electrical hazard, etc.

Description		Tripping indication	Reference
Mounting kit	Black handle, with error status, IP54	●	**LU9APN21**
	Red handle, with error status, IP54	●	**LU9APN22**
	Red handle, without error status, IP65	-	**LU9APN24**
Separate elements	Long shaft = 315 mm	-	**GVAPA1**
	Shaft (⩾ 300 mm) support plate for deep enclosure	-	**GVAPK12**
	Spacer base	-	**GVAPP1**
	Black handle, IP54	●	**GVAPB54**
	Red handle, IP54	●	**GVAPR54**
	Red handle, IP65		**GVAPR65**
Tool	"Laser square" plotting tool		**GVAPL01**

Dimensions:
page A4/61

PB111807_104.eps

MCC drawers (Motor Control Center)

The drawers are composed of:

- a fixed part, in the frame of the panel,
- a fully withdrawable part, integrating the protection, control and automation components.

With a height of 3/4/6/8/12/18/24/36 modules, they allow the assembling of motor protection/control feeders:

- Direct, one direction of rotation
- Direct, 2 directions of rotation
- Star-delta
- Dahlander (2 speeds)
- 2-speed, separate winding
- Motor drives from 0 to 500 kW
- Soft starters of 0 to 75 kW.

DB123404.eps

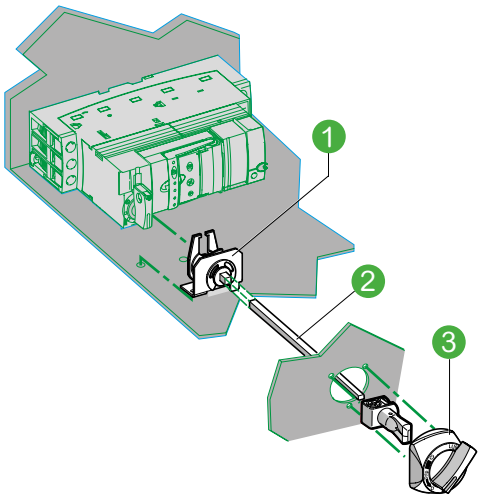

Mounting kit and handle for MCC drawer

Together, this provides manual control of a Ultra starter-controller from the front face of the drawer.
As the clamping part on top of Ultra control pad is open, the kit may be used on Ultra power bases before 2005.

Mounting kit + small handle		
Description	**Item**	**Reference**
Handle with mounting kit for MCC drawer	1 + 2 + 3	**LU9AP20**

PB121243.eps

Life Is On Schneider Electric

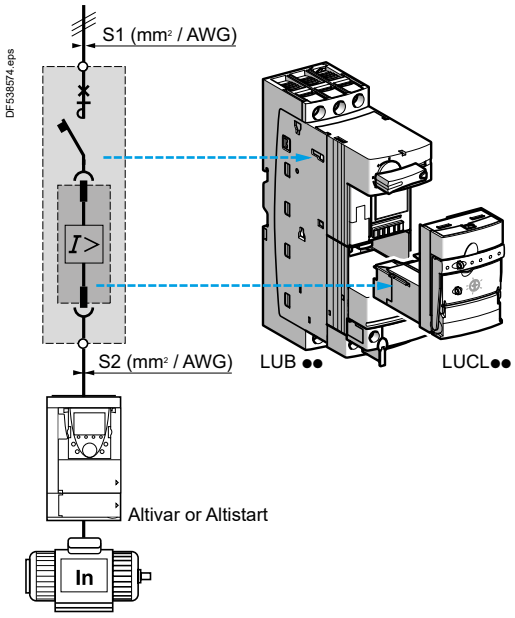

Introduction

When installed upstream of a variable speed controller or soft start unit, control unit LUCL●●, used in conjunction with an LUB12 or LUB32 power base, provides:
- isolation,
- short-circuit protection of the motor starter.

(variable speed controller-based or soft start unit-based motor starters).

Note: control unit LUCL, when used in conjunction with power base LUB12 or LUB32, conforms to standard IEC 60947-6-2.

Installation regulations

When the length of the cable between the Ultra starter and the variable speed controller is more than 1.5 m, the c.s.a. of the cable between the variable speed controller and the Ultra starter (S2) must be equal to the c.s.a. of the cable upstream of Ultra (S1).

Description of LUCL magnetic control unit

1. Extraction and locking handle
2. Sealing of locking handle
3. Dial for magnetic adjustment of motor In

References

Description	Line current of the variable speed controller or soft start unit	Reference (1)
	A	
Magnetic control unit	0.15…0.6	**LUCLX6●●**
	0.35…1.4	**LUCL1X●●**
	1.25…5	**LUCL05●●**
	3…12	**LUCL12●●**
	4.5…18	**LUCL18●●**
	8…32	**LUCL32●●**
	9.5…38	**LUCL38●●**

(1) Standard control circuit voltage:

Volts	24	48…72	110…240
⎓	BL (2) (3)	–	–
∼	B	–	–
⎓ or ∼	–	ES (4)	FU (5)

Please check the availability of your variant in the index page A4/40. The SEARCH function of your viewer can be used.

(2) Voltage code to be used for a starter-controller with communication module.
(3) d.c. voltage with maximum ripple of ±10 %.
(4) ⎓: 48…72 V, ∼: 48 V.
(5) ⎓: 110…220 V, ∼: 110…240 V.

Characteristics:
pages A4/48 and A4/49

Product references

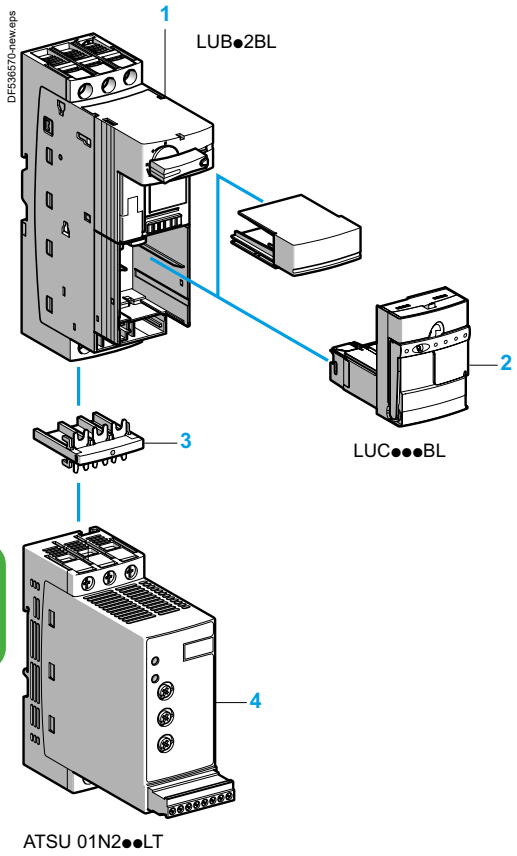

Accessories

Description	Used for starter	Reference
Power connector between ATSU01N2●●LT and Ultra	ATSU01N2●●LT	**VW3G4104**

Ultra starter and soft start unit combinations

Numerous possibilities for combinations and options are offered.

Motor power [1]			Soft starter	Ultra	
Voltage				Power base	Control unit [2]
230 V kW/*HP*	400 V kW	460 V *HP*			
0.75/*1*	1.5	*2*	ATSU01N206LT	LUB12	LUC●05BL
1.1/*1.5*	2.2/3	*3*	ATSU01N206LT	LUB12	LUC●12BL
1.5/2	–	–	ATSU01N209LT	LUB12	LUC●12BL
–	4	*5*	ATSU01N209LT	LUB12	LUC●12BL
2.2/*3*	–	–	ATSU01N212LT	LUB12	LUC●12BL
3/–	5.5	*7.5*	ATSU01N212LT	LUB32	LUC●18BL
4/*5*	7.5	*10*	ATSU01N222LT	LUB32	LUC●18BL
5.5/*7.5*	11	*15*	ATSU01N222LT	LUB32	LUC●32BL
7.5/*10*	15	*20*	ATSU01N232LT	LUB32	LUC●32BL

(1) Standard motor power ratings, HP power ratings indicated according to standard UL508.
(2) Depending on the configuration of the chosen Ultra starter, replace the ● with A for standard or B for expandable.

Characteristics:
pages A4/71 and A4/72

Dimensions:
page A4/73

Schemes:
pages A4/74 to A4/77

Life Is On Schneider Electric

Product references

LUB12-LUCL12BL_Image.eps

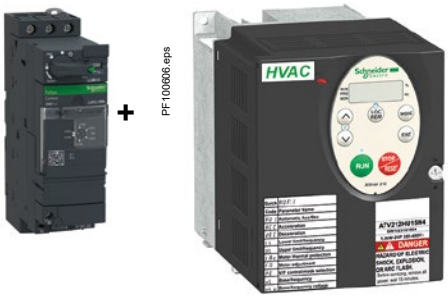

PF100606.eps

Variable speed controller/Ultra starter controller combination with magnetic protection

Ultra / Altivar 212 UL Type 1/IP 20

Power 400 V (kW)	Ultra references (protection + power switching)	Variable speed controller reference
0.75	LUB12 + LUCL05	**ATV212H075N4**
		ATV212HU15N4
2.2	LUB12 + LUCL12	**ATV212HU22N4**
3	LUB12 + LUCL12	**ATV212HU30N4**
4	LUB12 + LUCL12	**ATV212HU40N4**
5.5	LUB32 + LUCL32 or LUCL18	**ATV212HU55N4**
7.5	LUB32 + LUCL32 or LUCL18	**ATV212HU75N4**
11	LUB32 + LUCL32	**ATV212HD11N4**
15	LUB32 + LUCL32	**ATV212HD15N4**

LUB12-LUCL12BL_Image.eps

PF100614.eps

Ultra / Altivar 212 IP 54

Power 400 V (kW)	Ultra references (protection + power switching)	Variable speed controller reference
0.75	LUB12 + LUCL05	**ATV212W075N4**
1.5	LUB12 + LUCL12 or LUCL05	**ATV212WU15N4**
2.2	LUB12 + LUCL12	**ATV212WU22N4**
3	LUB12 + LUCL12	**ATV212WU30N4**
4	LUB12 + LUCL12	**ATV212WU40N4**
5.5	LUB32 + LUCL32 or LUCL18	**ATV212WU55N4**
7.5	LUB32 + LUCL32 or LUCL18	**ATV212WU75N4**
11	LUB32 + LUCL32	**ATV212WD11N4**
15	LUB32 + LUCL32	**ATV212WD15N4**

Products references

Variable speed controller/Ultra starter controller combination with magnetic protection (continued)

Ultra / Altivar 320

Power 400 V (kW)	Ultra references (protection + power switching)	Variable speed controller reference
0.37	LUB12 + LUCL05	**ATV320U04N4C**
0.55	LUB12 + LUCL05	**ATV320U06N4C**
0.75	LUB12 + LUCL05	**ATV320U07N4C**
1.1	LUB12 + LUCL12	**ATV320U11N4C**
1.5	LUB12 + LUCL12	**ATV320U15N4C**
2.2	LUB12 + LUCL12	**ATV320U22N4C**
3	LUB32 + LUCL18	**ATV320U30N4C**
4	LUB32 + LUCL18	**ATV320U40N4C**
5.5	LUB32 + LUCL32	**ATV320U55N4C**
7.5	LUB32 + LUCL32	**ATV320U75N4C**

Ultra / Altivar 630

Power 400V (kW)	Ultra references (protection + power switching)	Variable speed controller reference
0.75	LUB12 + LUCL05	**ATV630U07N4**
1.5	LUB12 + LUCL12	**ATV630U15N4**
2.2	LUB12 + LUCL12	**ATV630U22N4**
3	LUB32 + LUCL18	**ATV630U30N4**
4	LUB32 + LUCL18	**ATV630U40N4**
5.5	LUB32 + LUCL32	**ATV630U55N4**
7.5	LUB32 + LUCL32	**ATV630U75N4**

Product references

ASILUFC5	LU9RCD03	LUCB18B	LUCD38BL
ASILUFC51	LU9RCD10	LUCB18BL	LUCD38FU
GV1G10	LU9RCD50	LUCB18ES	LUCDT1BL
GVAPA1	LU9RDD03	LUCB18FU	LUCDX6BL
GVAPA2	LU9RDD30	LUCB1XB	LUCDX6FU
GVAPB54S	LU9RFL15	LUCB1XBL	LUCL05B
GVAPK12	LU9RPB010	LUCB1XES	LUCL05BL
GVAPL01	LU9RPB100	LUCB1XFU	LUCL05ES
GVAPP1	LU9RPB400	LUCB32B	LUCL05FU
GVAPR65S	LU9SP0	LUCB32BL	LUCL12B
LA9LB920	LUA1C11	LUCB32ES	LUCL12BL
LU2B12B	LUA1C20	LUCB32FU	LUCL12ES
LU2B12BL	LUA8E20	LUCB38BL	LUCL12FU
LU2B12ES	LUALB1	LUCB38FU	LUCL18B
LU2B12FU	LUALF1	LUCBT1BL	LUCL18BL
LU2B32B	LUB12	LUCBX6B	LUCL18ES
LU2B32BL	LUB120	LUCBX6BL	LUCL18FU
LU2B32ES	LUB32	LUCBX6FU	LUCL1XB
LU2B32FU	LUB320	LUCC05B	LUCL1XBL
LU2B38BL	LUB32NR	LUCC05BL	LUCL1XFU
LU2B38FU	LUB38	LUCC05ES	LUCL32B
LU2BA0BL	LUB380	LUCC05FU	LUCL32BL
LU2BA0ES	LUCA05B	LUCC12B	LUCL32FU
LU2BB0BL	LUCA05BL	LUCC12BL	LUCL38BL
LU2MB0B	LUCA05ES	LUCC12ES	LUCL38FU
LU2MB0BL	LUCA05FU	LUCC12FU	LUCLX6BL
LU2MB0ES	LUCA12B	LUCC18BL	LUFC00
LU2MB0FU	LUCA12BL	LUCC18FU	LUFDA01
LU6MB0B	LUCA12ES	LUCC1XB	LUFDA10
LU6MB0BL	LUCA12FU	LUCC1XBL	LUFDH11
LU6MB0ES	LUCA18B	LUCC1XES	LUFN02
LU6MB0FU	LUCA18BL	LUCC1XFU	LUFN11
LU9AD7	LUCA18ES	LUCC32B	LUFN20
LU9AP00	LUCA18FU	LUCC32BL	LUFP1
LU9AP11	LUCA1XB	LUCC32FU	LUFP7
LU9AP20	LUCA1XBL	LUCCX6B	LUFP9
LU9APN21	LUCA1XES	LUCCX6BL	LUFV2
LU9APN22	LUCA1XFU	LUCCX6FU	LUFW10
LU9APN24	LUCA32B	LUCD05B	LULC031
LU9BN11	LUCA32BL	LUCD05BL	LULC033
LU9BN11C	LUCA32ES	LUCD05ES	LULC08
LU9BN11L	LUCA32FU	LUCD05FU	LULC15
LU9C1	LUCA38BL	LUCD12B	
LU9C2	LUCA38FU	LUCD12BL	
LU9G02	LUCAX6B	LUCD12ES	
LU9G03	LUCAX6BL	LUCD12FU	
LU9GC3	LUCAX6ES	LUCD18BL	
LU9GC7	LUCAX6FU	LUCD18FU	
LU9M1	LUCB05B	LUCD1XB	
LU9MR1	LUCB05BL	LUCD1XBL	
LU9MR1C	LUCB05ES	LUCD1XES	
LU9MRC	LUCB05FU	LUCD1XFU	
LU9MRL	LUCB12B	LUCD32B	
LU9R03	LUCB12BL	LUCD32BL	
LU9R10	LUCB12ES	LUCD32ES	
LU9R30	LUCB12FU	LUCD32FU	

This document is current. Click on the product reference to get the most recent availability status (hyperlink to **se.com** product datasheet).
If your product variant is no longer available, please consult your distributor or regional sales office.

Life Is On Schneider Electric

Technical Data for Designers

Contents

Characteristics ..... A4/44 to A4/55
Curves ..... A4/56 to A4/59
Dimensions ..... A4/60 to A4/61
Schemes ..... A4/62 to A4/70
Altistart U01 Soft starter ..... A4/71 to A4/77

Environment

Product certifications			UL, CSA, CCC, EAC, ASEFA, UKCA.
			ABS, BV, DNV, GL, LROS. ATEX.
Conforming to standards			IEC/EN 60947-6-2, CSA-22.2 N° 60947-4-1-14 UL 60947-4-1 (3): with phase barrier LU9 SP0
Rated insulation voltage (Ui)	Conforming to IEC/EN 60947-1, overvoltage category III, degree of pollution: 3	**V**	690
	Conforming to UL508, CSA C22-2 n°14	**V**	600
Rated impulse withstand voltage (Uimp)	Conforming to IEC/EN 60947-6-2	**kV**	6
Degree of protection Conforming to IEC/EN 60947-1 (protection against direct finger contact)	Front panel outside connection zone		IP 40
	Front panel and wired terminals		IP 20
	Other faces		IP 20
Protective treatment	Conforming to IEC/EN 60068		"TH"
	Conforming to IEC/EN 60068-2-30	**Cycles**	12
	Conforming to IEC/EN 60068-2-11	**h**	48
Ambient air temperature around the device	Storage	**°C**	-40…+85
	Operation	**°C**	Power bases ≤ 32 A (15 kW) associated with LUCA, LUCL, LUCB, LUCC, LUCD Control Units: -25 °…+70 °C. (At temperatures above 60° and up to 70 °C, for Starter Controllers LUB32, LU2B32 leave a minimum gap of 9 mm between products).
			Power bases = 38 A (18,5 kW) associated with LUCA, LUCL, LUCB, LUCC, LUCD Control Units: -25 °…+60 °C. (At temperatures above 45 °C , leave a minimum gap of 9 mm between products. At temperatures above 55 °C and up to 60 °C, leave a gap of 20 mm between products).
Maximum operating altitude		**m**	2000
Operating positions	In relation to normal vertical mounting plane	520716.eps	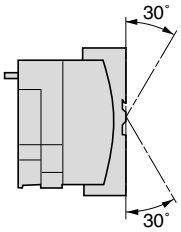 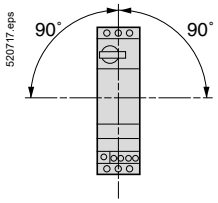
Flame resistance	Conforming to UL 94		V2
	Conforming to IEC/EN 60695-2-12	**°C**	960 (parts supporting live components)
		°C	650
Environmental restrictions			Cadmium and silicone-free, recyclable
Shock resistance 1/2 sine wave = 11 ms	Conforming to IEC/EN 60068-2-27 (1)		Power poles open: 10 gn
			Power poles closed: 15 gn
Vibration resistance 5…300 Hz	Conforming to IEC/EN 60068-2-6 (1)		Power poles open: 2 gn
			Power poles closed: 4 gn (2)
Resistance to electrostatic discharge	Conforming to IEC/EN 61000-4-2	**kV**	In open air: 8 - Level 3
		kV	On contact: 8 - Level 4
Immunity to radiated high-frequency disturbance	Conforming to IEC/EN 61000-4-3	**V/m**	10 - Level 3
Immunity to fast transient currents	Conforming to IEC/EN 61000-4-4	**kV**	All circuits except for serial link: 4 - Level 4
		kV	Serial link: 2 - Level 3
Immunity to dissipated shock waves	Conforming to IEC/EN 60947-6-2		Common mode / Serial mode
	Uc ∿ 24…240 V, Uc ⎓ 48…220 V	**kV**	2 / 1
	Uc = 24 V ⎓		Not applicable
Immunity to conducted high-frequency disturbance	Conforming to IEC/EN 61000-4-6	**V**	10
Radiated emission and conducted	Conforming to CISPR 11 and EN 55011		Class A

(1) Without modifying the contact states, in the most unfavourable direction.
(2) 2 gn with Advantys STB or CANopen communication modules.
(3) LUB38 + LUC●●●● is not E Type certified.

References: pages A4/15 to A4/19
Curves: pages A4/56 to A4/59
Dimensions: pages A4/60 and A4/61
Schemes: pages A4/62 to A4/70

Characteristics

Power circuit connection characteristics

Connection to Ø4 mm screw clamp terminals

Power base, control unit or reverser block type			LUB12 + LUCA or LUCB or LUCC or LUCD	LUB32/LUB38 + LUCA or LUCB or LUCC or LUCD	LU2B LU2M LU6M
Flexible cable without cable end	1 conductor	mm²	2.5…10	2.5…10	2.5…10
	2 conductors	mm²	1.5…6	1.5…6	1.5…6
Flexible cable with cable end	1 conductor	mm²	1…6	1…6	1…6
	2 conductors	mm²	1…6	1…6	1…6
Solid cable without cable end	1 conductor	mm²	1…10	1…10	1…10
	2 conductors	mm²	1…6	1…6	1…6
Screwdriver			Philips n° 2 or flat screwdriver: Ø6 mm		
Tightening torque		N.m	2.5	2.5	2.5

Control circuit connection characteristics

Connection to Ø3 mm screw clamp terminals

Flexible cable without cable end	1 conductor	mm²	0.75…1.5	0.75…1.5	0.75…1.5
	2 conductors	mm²	0.75…1.5	0.75…1.5	0.75…1.5
Flexible cable with cable end	1 conductor	mm²	0.34…1.5	0.34…1.5	0.34…1.5
	2 conductors	mm²	0.34…1.5	0.34…1.5	0.34…1.5
Solid cable without cable end	1 conductor	mm²	0.75…1.5	0.75…1.5	0.75…1.5
	2 conductors	mm²	0.75…1.5	0.75…1.5	0.75…1.5
Screwdriver			Philips n° 1 or flat screwdriver: Ø5 mm		
Tightening torque		N.m	0.8…1.2	0.8…1.2	0.8…1.2

Control circuit characteristics

Rated voltage of control circuit	∼ 50/60 Hz	V	24…240	24…240	–
	⎓	V	24…220	24…220	–
Voltage limits	⎓ 24 V (1)	V	20…27	20…27	–
Operation	∼ 24 V	V	20…26.5	20…26.5	–
	∼ or ⎓ 48…72 V	V	∼ 38.5…72. ⎓ 38.5…93		–
	∼ 110…240 V	V	∼ 88…264	∼ 88…264	–
	⎓ 110…220 V	V	⎓ 88…242	⎓ 88…242	–
Drop-out	⎓ 24 V	V	14.5	14.5	–
	∼ 24 V	V	14.5	14.5	–
	∼ or ⎓ 48…72 V	V	30	30	–
	∼ 110…240 V, ⎓ 110…220 V	V	55	55	–
Typical consumption I max while closing	⎓ 24 V	mA	130	220	120
	∼ 24 V	mA	140	220	2360
	∼ or ⎓ 48…72 V	mA	280	280	2300
	∼ 110…240 V, ⎓ 110…220 V	mA	280	280	1000
I rms sealed	⎓ 24 V	mA	60	80	120
	∼ 24 V	mA	70	90	(2)
	∼ or ⎓ 48…72 V	mA	35	45	(2)
	∼ 110…240 V, ⎓ 110…220 V	mA	35	25	(2)
Heat dissipation		W	2	3	–
Operating time	Closing	ms	24 V: 70; 48 V: 60; ⩾ 72 V: 50		–
	Opening	ms	35	35	–
Resistance to micro-breaks		ms	3	3	–
Resistance to voltage dips	IEC/EN 61000-4-11		At least 70 % of Uc for 500 ms		–
Mechanical durability	In millions of operating cycles		15	15	–
Maximum operating rate	In operating cycles per hour		3600	3600	–

Main pole characteristics

Number of poles			3	3	–
Isolation conforming to IEC/EN 60947-1	Possible		Yes	Yes	–
	Padlocking		1 padlock with Ø6.9 mm shank		–
Rated thermal current		A	12	32/38	–
Rated operational current (Ue ⩽ 440V)	To IEC/ EN 60947-6-2 Category AC-41		θ ⩽ 70°C: 12 A	θ ⩽ 70°C: 32/38 A	–
	Category AC-43		θ ⩽ 70°C: 12 A	θ ⩽ 70°C: 28.5/35 A	–
Rated operational voltage		V	690 (3)	690 (3)	–
Frequency limits	Of the operating current	Hz	40…60	40…60	–
Power dissipated in the power circuits	Operational current	A	3 6 9 12	18 25 32 38	–
	Power dissipated in all three poles	W	0.1 0.3 0.6 1.1	2.4 4.6 7.5 10.6	–
Rated breaking capacity on short-circuit		V	230 440	500 690	–
		kA	50 50 (25 for LUB38)	10 4	–
Total breaking time		ms	2 2	2	–
Thermal limit	With Isc max on 440 V	kA²s	90	120	–

(1) Voltage with maximum ripple of ±10 %. *(2) No consumption sealed.* *(3) For 690 V, use phase barrier **LU9SP0**.*

References: pages A4/15 to A4/19
Curves: pages A4/56 to A4/59
Dimensions: pages A4/60 and A4/61
Schemes: pages A4/62 to A4/70

Specific characteristics of power bases LU2B and reverser blocks LU2M or LU6M

Duration of inrush phase		∿ 50/60 Hz	**ms**	25
		⎓	**ms**	15
Maximum operating time	Without change of direction		**ms**	75
	With change of direction		**ms**	150

General characteristics of auxiliary contacts

Conventional thermal current (Ith)	For ambient temperature θ < 70 °C		**A**	5
Frequency of the operational current			**Hz**	Up to 400
Minimum switching capacity $\lambda = 10^{-8}$		U min	**V**	17
		I min	**mA**	5
Short-circuit protection	Conforming to IEC/EN 60947-5-1		**A**	gG fuse: 4
Short-time rating	Permissible for	1 s	**A**	30
		500 ms	**A**	40
		100 ms	**A**	50
Insulation resistance			**mΩ**	10
Non-overlap time	Guaranteed between N/C and N/O contacts		**ms**	2 (on energisation and on de-energisation)

Specific characteristics of auxiliary contacts built-into the power base

Linked contacts	Conforming to IEC/EN 60947-4-1		Each power base has 1 N/O contact and 1 N/C contact which are mechanically linked
Mirror contact	Conforming to IEC/EN 60947-1		The N/C contact fitted in each power base reliably represents the state of the power contacts (safety scheme)
Rated operational voltage (Ue)		**V**	Up to ∿ 690; ⎓ 250
Rated insulation voltage (Ui)	Conforming to IEC/EN 60947-5-1	**V**	690
	Conforming to UL, CSA	**V**	600

Specific characteristics of auxiliary contacts in modules LUFN, of auxiliary contacts LUA1 and of reverser blocks LU2M and LU6M

Rated operational voltage (Ue)		**V**	Up to ∿ 250; ⎓ 250
Rated insulation voltage (Ui)	Conforming to IEC/EN 60947-5-1	**V**	250
	Conforming to UL, CSA	**V**	250

Rated operational power of contacts
Conforming to IEC/EN 60947-5-1

a.c. supply, categories AC-14 and AC-15
Electrical durability (valid for up to 3600 operating cycles/hour) on an inductive load such as the coil of an electromagnet: making current (cos ϕ 0.7) = 10 times the power broken (cos ϕ = 0.4)

	V	24	48	115	230	400	440	690
1 million operating cycles	VA	60	120	280	560	960	1050	1440
3 million operating cycles	VA	16	32	80	160	280	300	420
10 million operating cycles	VA	4	8	20	40	70	80	100

d.c. supply, category DC-13
Electrical durability (valid for up to 1200 operating cycles/hour) on an inductive load such as the coil of an electromagnet, without economy resistor, the time constant increasing with the load.

V	24	48	125	250
W	120	90	75	68
W	70	50	38	33
W	25	18	14	12

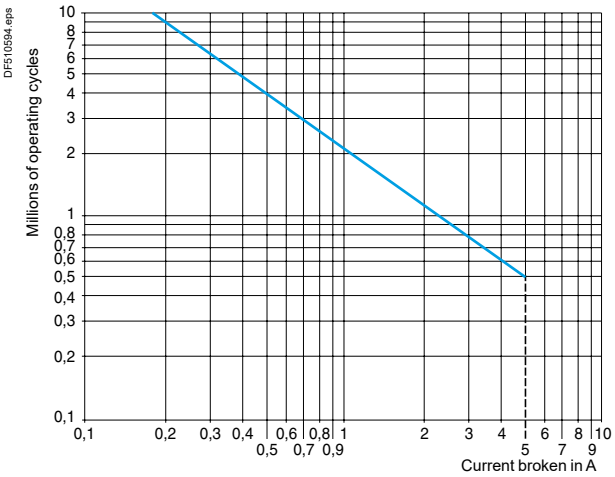

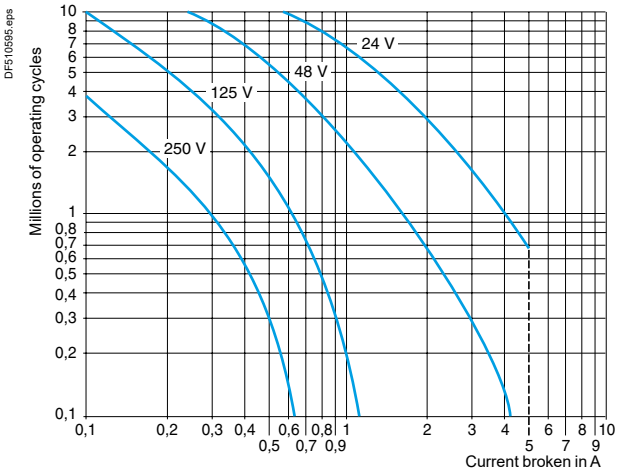

References:
pages A4/15 to A4/19

Curves:
pages A4/56 to A4/59

Dimensions:
pages A4/60 and A4/61

Schemes:
pages A4/62 to A4/70

Characteristics

Characteristics of standard control units LUCA

Protection	Motor type		3-phase
	Conforming to standard		IEC/EN 60947-6-2, UL 60947-4-1, CSA C22-2 n°14
Overload protection	Tripping class conforming to UL 508, IEC/EN 60947-6-2		10
	Frequency limits of the operational current	**Hz**	40…60
	Temperature compensation	**°C**	- 25…+ 70
	Protection against phase imbalance		Yes
Short-circuit protection	Tripping threshold		13 x Ir max (max current setting)
	Tripping tolerance		± 20 %

Characteristics of advanced control units LUCB, LUCC and LUCD

Control unit type			**LUCB**	**LUCC**	**LUCD**
Protection	Motor type		3-phase	Single-phase	3-phase
	Conforming to standard		IEC/EN 60947-6-2, CSA C22-2 n°14	IEC/EN 60947-6-2, CSA C22-2 n°14	IEC/EN 60947-6-2, CSA C22-2 n°14
Overload protection	Tripping class conforming to UL 508, IEC/EN 60947-6-2		10	10	20
	Frequency limits of the operational current	**Hz**	40…60	40…60	40…60
	Temperature compensation	**°C**	-25…+70	-25…+55	-25…+70
	Protection against phase imbalance		Yes	–	Yes
Short-circuit protection	Tripping threshold		13 x Ir max.	13 x Ir max.	13 x Ir max.
	Tripping tolerance		±20 %	±20 %	±20 %

References:
pages A4/16 to A4/19
Curves:
pages A4/56 to A4/59
Dimensions:
pages A4/60 and A4/61
Schemes:
pages A4/62 to A4/70

Characteristics of magnetic control unit LUCL

Protection	Motor type		3-phase
	Conforming to standard		When used in conjunction with an LUB12, LUB32 or LUB38 power base, magnetic control unit LUCL conforms to standard IEC 60947-6-2.
Short-circuit protection	Tripping threshold		14.2 x In (max. setting current)
	Tripping tolerance		±20 %
Environment			
Product certifications			CE
Conforming to standards			When used in conjunction an LUB power base, control unit LUCL conforms to standard 60947-6-2.
Rated insulation voltage (Ui)	Conforming to IEC/EN 60947-1, overvoltage category III, degree of pollution: 3	**V**	690
Rated impulse withstand voltage (Uimp)	Conforming to IEC/EN 60947-6-2	**kV**	6
Safety separation of circuits SELV	Conforming to IEC/EN 60947-1 appendix N	**V**	Between the control or auxiliary circuit and the main circuit: 400
			Between the control and auxiliary circuits: 40
Degree of protection Conforming to IEC/EN 60947-1 (protection against direct finger contact)	Front panel outside connection zone		IP 40
	Front panel and wired terminals		IP 20
	Other faces		IP 20
Protective treatment	Conforming to IEC/EN 60068		"TH"
	Conforming to/EN 60068-2-30	**Cycles**	12
	Conforming to IEC/EN 60068-2-11	**h**	48
Ambient air temperature around the device	Storage	**°C**	- 40…+ 85
	Operation	**°C**	Power bases and standard and advanced control units: - 25… + 70. (At temperatures above 60°C and up to 70°C, for Ie = 32 A, leave a minimum gap of 9 mm between products).
			Power bases = 38 A (18,5 kW) associated with LUCA, LUCL, LUCB, LUCC, LUCD Control Units: -25 °…+60 °C. (At temperatures above 45 °C , leave a minimum gap of 9 mm between products. At temperatures above 55 °C and up to 60 °C, leave a gap of 20 mm between products).
Maximum operating altitude		**m**	2000
Operating positions	In relation to normal vertical mounting plane		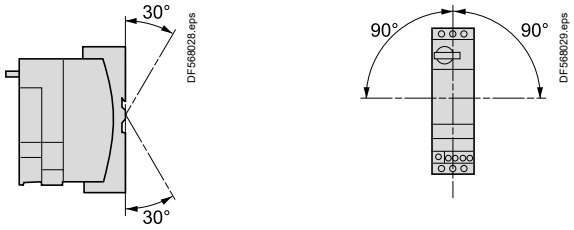
Flame resistance	Conforming to UL 94		V2
	Conforming to IEC/EN 60695-2-12	**°C**	960 (parts supporting live components)
		°C	650
Environmental restrictions			Cadmium and silicone-free, recyclable
Shock resistance 1/2 sine wave = 11 ms	Conforming to IEC/EN60068-2-27 (1)		Power poles open: 10 gn
			Power poles closed: 15 gn
Vibration resistance 5…300 Hz	Conforming to IEC/EN 60068-2-6 (1)		Power poles open: 2 gn
			Power poles closed: 4 gn (2)
Resistance to electrostatic discharge	Conforming to IEC/EN 61000-4-2	**kV**	In open air: 8 - Level 3
		kV	On contact: 8 - Level 4
Immunity to radiated high-frequency disturbance	Conforming to IEC/EN 61000-4-3	**V/m**	10 - Level 3
Immunity to fast transient currents	Conforming to IEC/EN 61000-4-4	**kV**	All circuits except for serial link: 4 - Level 4
		kV	Serial link: 2 - Level 3
Immunity to dissipated shock waves	Conforming to IEC/EN 60947-6-2		**Common mode** / **Serial mode**
	Uc ∿ 24…240 V, Uc ⎓ 48…220 V	**kV**	2 / 1
	Uc = 24 V ⎓		Not applicable
Immunity to conducted high-frequency disturbance	Conforming to IEC/EN 61000-4-6	**V**	10

(1) Without modifying the contact states, in the most unfavourable direction.
(2) 2 gn with Advantys STB or CANopen communication modules.

References:
page A4/35

Characteristics

Power circuit connection characteristics of LUCL					
Power base and control unit type			**LUB12 + LUCL**	**LUB32 + LUCL**	**LUB38 + LUCL**
Connection to Ø4 mm screw clamp terminals					
Flexible cable without cable end	1 conductor	mm²	2.5…10	2.5…10	
	2 conductors	mm²	1.5…6	1.5…6	
Flexible cable with cable end	1 conductor	mm²	1…6	1…6	
	2 conductors	mm²	1…6	1…6	
Flexible cable without cable end	1 conductor	mm²	1…10	1…10	
	2 conductors	mm²	1…6	1…6	
Screwdriver			Philips n° 2 or flat screwdriver: Ø6 mm		
Tightening torque		N.m	1.9…2.5	1.9…2.5	
Control circuit connection characteristics of LUCL					
Connection to Ø3 mm screw clamp terminals					
Flexible cable without cable end	1 conductor	mm²	0.75…1.5	0.75…1.5	
	2 conductors	mm²	0.75…1.5	0.75…1.5	
Flexible cable with cable end	1 conductor	mm²	0.34…1.5	0.34…1.5	
	2 conductors	mm²	0.34…1.5	0.34…1.5	
Flexible cable without cable end	1 conductor	mm²	0.75…1.5	0.75…1.5	
	2 conductors	mm²	0.75…1.5	0.75…1.5	
Screwdriver			Philips n° 2 or flat screwdriver: Ø5 mm		
Tightening torque		N.m	0.8…1.2	0.8…1.2	
Control circuit characteristics of LUCL					
Rated control circuit voltage	∼ 50/60 Hz	V	24…240	24…240	
	⎓	V	24…220	24…220	
Voltage limits	⎓ 24 V (1)	V	20…27	20…27	
Operation	∼ 24 V	V	20…26.5	20…26.5	
	∼ or ⎓ 48…72 V	V	∼ 38.5…72. ⎓ 38.5…93	∼ 38.5…72. ⎓ 38.5…93	
	∼ 110…240 V	V	∼ 88…264	∼ 88…264	
	⎓ 110…240 V	V	⎓ 88…242	⎓ 88…242	
Drop-out	⎓ 24 V	V	14.5	14.5	
	∼ 24 V	V	14.5	14.5	
	∼ or ⎓ 48…72 V	V	29	29	
	∼ 110…240 V, ⎓ 110…220 V	V	55	55	
Typical consumption I max while closing	⎓ 24 V	mA	130	220	
	∼ 24 V	mA	140	220	
	∼ or ⎓ 48…72 V	mA	280	280	
	∼ 110…240 V, ⎓ 110…220 V	mA	280	280	
I rms sealed	⎓ 24 V	mA	60	80	
	∼ 24 V	mA	70	90	
	∼ or ⎓ 48…72 V	mA	35	45	
	∼ 110…240 V, ⎓ 110…220 V	mA	35	25	
Heat dissipation		W	2	3	
Operating time	Closing	ms	24 V: 70; 48 V: 60; ⩾ 72 V: 50	24 V: 70; 48 V: 60; ⩾ 72 V: 50	
	Opening	ms	35	35	
Resistance to micro-breaks		ms	3	3	
Resistance to voltage dips	IEC/EN 61000-4-11		At least 70 % of Uc for 500 ms		
Mechanical durability	In millions of operating cycles		15	15	
Maximum operating rate	In operating cycles per hour		3600	3600	
Main pole characteristics of LUCL					
Number of poles			3	3	
Isolation conforming to IEC/EN 60947-1	Possible		Yes	Yes	
	Padlocking		1 padlock with Ø6.9 mm shank	1 padlock with Ø6.9 mm shank	
Rated thermal current		A	12	32	(38 A for LUB38)
Rated operational current (Ue ⩽ 440 V)	Conforming to IEC/EN 60947-6-2 Category AC-41		θ ⩽ 70 °C: 12 A	θ ⩽ 70 °C: 32 A	(38 A for LUB38)
	Conforming to IEC/EN 60947-6-2 Category AC-43		θ ⩽ 70 °C: 12 A	θ ⩽ 70 °C: 32 A	38
Rated operational voltage		V	690 (3)	690 (3)	690
Frequency limits	Of the operating current	Hz	40…60	40…60	40...60
Power dissipated in the power circuits	Operational current	A	3 6 9 12 18 25 32 38		
	Power dissipated in all three poles	W	0.1 0.3 0.6 1.1 2.4 4.6 7.5 10.5		
Rated breaking capacity on short-circuit		V	230 440 500 690		
		kA	50 50 10 4		
Total breaking time		ms	2 2 2		
Thermal limit	With Isc max on 440 V	kA²s	90	120	

(1) d.c. voltage with maximum ripple of ± 10 %. *(2) No consumption sealed.* *(3) For 690 V, use phase barrier **LU9SP0**.*

References:
page A4/35

Characteristics

Characteristics of limiter-disconnector LUALB1

Rated insulation voltage (Ui) conforming to standard IEC/EN 60947-1		V	690	
Conventional thermal current (Ith) conforming to standard IEC/EN 60947-1		A	32	
Operating threshold	I rms	kA	50	
Breaking capacity		V	440	690
		kA	130	70
Mounting			Directly on the upstream terminals of the starter-controller	
Cabling				
Solid cable	1 conductor	mm²	1.5…10	
	2 conductors	mm²	1.5...6	
Flexible cable without cable end	1 conductor	mm²	1…10	
	2 conductors	mm²	1…6	
Flexible cable with cable end	1 conductor	mm²	1...6	
	2 conductors	mm²	1...6	
Screwdriver			Phillips n°2 or flat screwdriver Ø6 mm	
Tightening torque		N.m	1.9…2.5	

Characteristics of current limiter LA9LB920

Rated insulation voltage (Ui) conforming to standard IEC/EN 60947-1		V	690	
Conventional thermal current (Ith) conforming to standard IEC/EN 60947-1		A	63	
Operating threshold	I rms	A	1000	
Breaking capacity		V	440	690
		kA	100	35
Mounting			Separate	
Cabling				
Solid cable	1 conductor	mm²	1.5…25	
	2 conductors	mm²	1.5...10	
Flexible cable without cable end	1 conductor	mm²	1.5…25	
	2 conductors	mm²	2.5…10	
Flexible cable with cable end	1 conductor	mm²	1.5…16	
	2 conductors	mm²	1.5…4	
Screwdriver			Phillips n°2 or flat screwdriver Ø6 mm	
Tightening torque		N.m	2.2	

Characteristics of thermal overload alarm function modules LUFW10

Activation threshold			Fixed at 88 % of the thermal tripping state
Hysteresis between activation and switching off			5 %
Display			By LED on front panel
Supply			Powered by the control unit
Discrete output characteristics	Type		N/O contact
	AC-15		230 V max; 400 VA 100 000 operating cycles
	DC-13		24 V; 50 W 100 000 operating cycles
Conventional thermal current (Ith)	For ambient temperature θ < 70 °C	A	2
Short-circuit protection	Conforming to IEC/EN 60947-5-1	A	gG fuse: 2

Characteristics of thermal overload fault signalling and reset modules

Module type			LUFDH11	LUFDA01	LUFDA10
Fault signalling			By LED on front panel		
External power supply		V	∿/⎓ 24… 240		
Module consumption		mA	7 at ⎓ 24 1.1 at ∿ 240		
Discrete outputs	Type		1 N/C+ 1 N/O	1 N/C	1 N/O
	AC-15		230 V max; 400 VA 100 000 operating cycles		
	DC-13		24 V; 50 W 100 000 operating cycles		
Conventional thermal current (Ith)	For ambient temperature θ < 70 °C	A	2		
Short-circuit protection	Conforming to IEC/EN 60947-5-1	A	gG fuse: 2		
Reset input	Conductor c.s.a.	mm²	0.2 min		
	Length	m	500 (R = 50 Ω , L = 52.8 mH, Cp = 93 pF)		

References:
pages A4/18, A4/19

Dimensions:
page A4/61

Characteristics

Characteristics of motor load indication function module LUFV2

Analogue output			4 - 20 mA
Signal delivered			Value of I average/Ir ratio within the range of 0 to 2 for LUCB and LUCD
			Value of I average/Ir ratio within the range of 0 to 3 for LUCC
Load impedance	Minimum	kΩ	–
	Maximum	Ω	500
	Typical	Ω	100
Signal characteristics with advanced control unit	Precision		±6 %
Supply			External ⎓ 24 V

Characteristics of AS-Interface communication module ASILUFC51

Module type			**ASILUF C51**
Product certification			AS-Interface V2.1 n° 52303
AS-Interface profile			7.A.7.E
Ambient air temperature		**°C**	Operation -25…+55
Cycle time		**ms**	10
Addressing			62 slaves
AS-Interface supply		**V**	29.5...31.5
Current consumption	On the AS-Interface bus	**mA**	Normal operation: 25
		mA	Fault condition: 30
	On 24 V supply for the outputs	**mA**	200
Auxiliary supply		**V**	⎓ 24 ±30 %
Number of outputs			2 dedicated to starter-controller coil operation
Switching capacity of the solid state outputs			0.5 A/24 V (outputs protected against short-circuits)
Indication/diagnostics			By 2 LEDs on front panel

Characteristics of Modbus communication module LULC033

Physical interface				RS 485 multi-drop
Connections				RJ45 on front panel
Protocol				Modbus RTU
Maximum transmission speed			**bit/s**	19 200 (self-configuration up to this value)
Maximum return time			**ms**	30
Addressing				By switches: from 0...31
Ambient air temperature			**°C**	Operation -25…+55
Discrete inputs		Number		2 (to be assigned according to the configuration)
		Supply	**V**	⎓ 24
		Input current	**mA**	7
	Nominal input values	Voltage	**V**	⎓ 24 (positive logic)
		Current	**mA**	7
	Response time	Change to state 1	**ms**	10 (±30 %)
		Change to state 0	**ms**	10 (±30 %)
	Input type			Resistive
Solid state outputs		Number		3, of which 2 dedicated to starter-controller coil operation
		Supply	**V**	⎓ 24
		Max. current	**mA**	500
	Protection	gI fuse	**A**	1
	Switching capacity			0.5 A/24 V
Indication/diagnostics				By 3 LEDs on front panel

Ultra motor starters
Ref.

References:
pages A4/18, A4/27, A4/29

Schemes:
pages A4/63, A4/68, A4/69

Characteristics

Characteristics of CANopen communication module

Communication module				CANopen LULC08
Services	Conformity class			S 20 (Schneider Electric)
	Standard			CIADS-301 V4.02 DR 303-2
	Profile			–
	Protocol			CAN 2.0A (2B passive)
	Address			0…127 (by switches)
Structure	Physical interface			9-way SUB-D female
	Binary rate			10, 20, 50, 125, 250, 500 and 1000 Kbits/s (by switches)
	Cables			2 shielded twisted pairs
Supply for the discrete outputs and control	⎓ 24 V		**V**	20…28
	Current consumption		**A**	1.5 (max)
	Protection by gl fuse		**A**	2
Ambient air temperature			**°C**	Operation -25…+55
Logic inputs	Number			2 (to be assigned according to the configuration)
	Supply		**V**	⎓ 24
	Input current		**mA**	7
	Nominal input values	Voltage	**V**	⎓ 24 (positive logic)
		Current	**mA**	7
	Response time	Change to state 1	**ms**	10 (±30 %)
		Change to state 0	**ms**	10 (±30 %)
	Input type			Resistive
Discrete outputs	Number			3, of which 2 dedicated to starter-controller coil operation
	Max. current		**mA**	500
	Short-circuit protection			Yes
	Switching capacity			0.5 A / ⎓ 24 V
Indication/diagnostics				By 3 LEDs on front panel

Characteristics of Advantys STB communication module LULC15

Physical interface				CAN
Connections				Fire Wire
Protocol				CAN 2.0 and CAN 2.B (passive mode)
Transmission speed			**kbit/s**	800
Addressing				Self-addressing
Supply for the discrete outputs and control	⎓ 24 V		**V**	20…28
	Current consumption		**A**	1.5 (max)
	Protection by gl fuse		**A**	2
Ambient air temperature			**°C**	Operation -25…+55
Discrete inputs	Number			2 (to be assigned according to configuration)
	Supply		**V**	⎓ 24
	Input current		**mA**	7
	Nominal input values	Voltage	**V**	⎓ 24 (positive logic)
		Current	**mA**	7
	Response time	Change to state 1	**ms**	10 (± 30 %)
		Change to state 0	**ms**	10 (± 30 %)
	Input type			Resistive
Discrete outputs	Number			3, of which 2 dedicated to starter-controller coil operation
	Max. current		**mA**	500
	Short-circuit protection			Yes
	Switching capacity			0.5 A / ⎓ 24 V
Indication/diagnostics				By 3 LEDs on front panel

References:
pages A4/28, A4/30, A4/38
Schemes:
pages A4/63 and A4/64

Characteristics

Connection characteristics

Module type				LUFW10, LUFDH11, LUFDA01 and LUFDA10	LUFV2	ASILUFC51 Inputs and 24 V auxiliary supply	ASILUFC51 Outputs
Connectors		Pitch		5.08	3.81	5.08	3.81
Flexible cable without cable end		1 conductor	mm²	0.2…1.5	0.14…1	0.2…1.5	0.14…1
		2 identical conductors	mm²	0.2…1	0.14…0.75	0.2…1	0.14…0.75
Flexible cable with cable end	Without insulated ferrule	1 conductor	mm²	0.25…1.5	0.25…1	0.25…1.5	0.25…1
		2 identical conductors	mm²	0.25…1	0.25…0.34	0.25…1	0.25…0.34
	With insulated ferrule	1 conductor	mm²	0.25…1.5	0.25…0.5	0.25…1.5	0.25…0.5
		2 identical conductors (Use a double cable end)	mm²	0.5…1	0.5	0.5…1	0.5
Solid cable without cable end		1 conductor	mm²	0.2…1.5	0.14…1	0.2…1.5	0.14…1
		2 identical conductors	mm²	0.2…1	0.14…0.5	0.2…1	0.14…0.5
Conductor size		1 conductor		AWG24… AWG16	AWG26… AWG16	AWG24… AWG16	AWG26… AWG16
Tightening torque			N.m	0.5…0.6	0.20…0.25	0.5…0.6	0.20…0.25
Flat screwdriver			mm	3.5	2.5	3.5	2.5

Module type				LULC033, LULC08 and LULC15	LUFC00
Connectors		Pitch		3.81	3.81
Flexible cable without cable end		1 conductor	mm²	0.14…1	0.14…1
		2 identical conductors	mm²	0.14…0.75	0.14…0.75
Flexible cable with cable end	Without insulated ferrule	1 conductor	mm²	0.25…1	0.25…1
		2 identical conductors	mm²	0.25…0.34	0.25…0.34
	With insulated ferrule	1 conductor	mm²	0.25…0.5	0.25…0.5
		2 identical conductors (Use a double cable end)	mm²	0.5	0.5
Solid cable without cable end		1 conductor	mm²	0.14…1	0.14…1
		2 identical conductors	mm²	0.14…0.5	0.14…0.5
Conductor size		1 conductor		AWG26… AWG16	AWG26… AWG16
Tightening torque			N.m	0.20…0.25	0.20…0.25
Flat screwdriver			mm	2.5	2.5

References:
pages A4/18, A4/27, A4/30

Schemes:
pages A4/63 to A4/66

Characteristics

Knob positions - Poles and Signaling contact states

Ultra operating status		Position of rotary knob	Indication on front panel	N/O pole contact	N/C pole contact	N/O contact any fault	N/C contact any fault	⏻ N/O contact product ready	N/C contact Rotary knob on OFF position
References of add-on contact blocks and auxiliary contact modules Terminal referencing		–	–	–	**LUFN11** 31-32	**LUA1C20** 97-98	**LUA1C11** 95-96	**LUA1C20** 17-18	–
	or	–	–	–	**LUFN02** 31-32 41-42	–	–	–	**LUA8E20** 57/58 67/68
	or	–	–	**LUFN20** 33-34 43-44	**LU9BN11** 21-22	–	–	**LUA1C11** 17-18	–
	or	–	–	**LUFN11** 43-44	–	–	–	–	–
	or	–	–	**LU9BN11** 13-14	–	–	–	–	–
Off		OFF	**0**						
Ready to operate			**0**						
Start			**1**						
Tripped on short-circuit		TRIP	**I>>**						
Tripped on thermal overload	Manual reset mode	TRIP	**0**						
	Automatic reset on thermal overload fault mode		**0**						
	Remote reset mode		**0**						

N/O contact *in closed position.*

N/C contact *in open position.*

References:
pages A4/15 and A4/18

Schemes:
pages A4/67 and A4/70

Life Is On Schneider Electric

Characteristics

Data profile under AS-Interface					
Control unit present in the product				Standard LUCA	Advanced LUCB, CC, CD
Status		D0	Ready (available)		
		D1	Poles closed (running)		
Commands		D0	Start - forward running		
		D1	Start - reverse running		

Main registers accessible with Modbus, CANopen, Advantys STB, PROFIBUS DP and DeviceNet communication modules.					
For other registers and for further information, please consult the User's Manual *Communication variables* on the website www.schneider-electric.com					
Control unit present in the product				Standard	Advanced
Marking	Register 0…Register 99	Words…Bits	Commercial reference, serial number, software version		
Log	Register 100…Register 450	Words…Bits	Fault log, Operating log, Log of last 5 trips		
Status	Register 451…Register 464	Words…Bits	Alarm signalling (bits), Fault signalling (bits)		
Values	Register 465…Register 473	Words	Irms phase 1, phase 2, phase 3. Motor load, thermal status Earth leakage current. Phase imbalance and phase failure		
	Register 474…Register 599	Words…Bits	Reserved		
Configuration	Register 600…Register 699	Words…Bits	Protection and alarm thresholds, fallback mode and reset mode		
Commands	Register 700…Register 714	Words…Bits	Commands		

Status and values	Register 452	Bit 0	Short-circuit fault		
		Bit 1	Overcurrent fault		
		Bit 2	Thermal overload fault		
	Register 455	Bit 0	Ready (available)		
		Bit 1	Poles closed		
		Bit 2	Fault		
		Bit 3	Alarms		
		Bit 4	Tripped ("TRIP" position)		
		Bit 5	Fault acknowledgement allowed		
		Bit 6	Reserved		
		Bit 7	Motor running		
		Bit 8	Motor current % (bit 0)		
		Bit 9	Motor current % (bit 1)		
		Bit 10	Motor current % (bit 2)		
		Bit 11	Motor current % (bit 3)		
		Bit 12	Motor current % (bit 4)		
		Bit 13	Motor current % (bit 5)		
		Bit 14	Reserved		
		Bit 15	Motor starting		
	Register 461	Bit 3	Thermal overload alarm		
	Register 465	Word	Thermal status value		
	Register 466	Word	Motor load value (Im/Ir)		

Configuration	Register 602	Bit 0	Manual reset on thermal overload fault		
		Bit 1	Remote reset on thermal overload fault		
		Bit 2	Automatic reset on thermal overload fault		
	Register 682	Value 0	Fallback mode validation		
		Value 1	Outputs OA1 and OA3 unchanged		
		Value 2	Outputs OA1 and OA3 forced to 0		
		Value 3	Outputs OA1 and OA3 unchanged, signalling existence of communication failure		
		Value 4	Outputs OA1 forced to 1 and OA3 unchanged		
		Value 5	Outputs OA3 forced to 1 and OA1 unchanged		

Commands	Register 700	Bit 0	LO1 output command		
	Register 704	Bit 0	OA1 output command		
		Bit 1	OA3 output command		
		Bit 2	Reserved		
		Bit 3	Fault acknowledgement		
		Bit 4	Reserved		
		Bit 5	Trip test		
		Bit 6…15	Reserved		

Data accessible

References:
pages A4/27 to A4/30

Schemes:
pages A4/63 and A4/64

Curves

Tripping curves for control units LUCA, LUCB, LUCD

Average operating times at 20 °C according to multiples of the setting current, tolerance : ± 20 %.

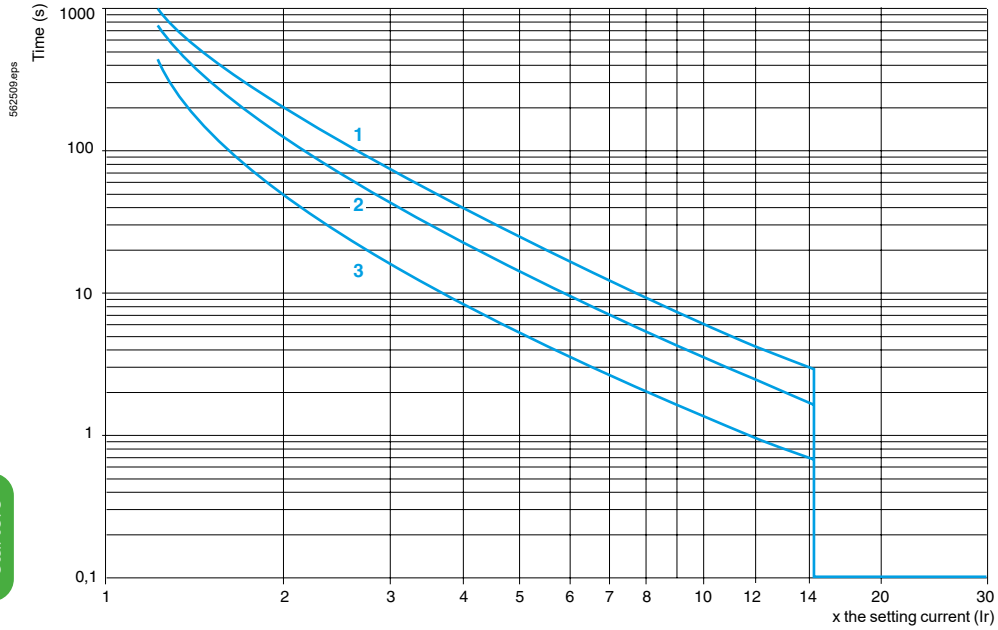

1 LUCD, 3 poles from cold state, class 20.
2 LUCA, LUCB, 3 poles from cold state, class 10.
3 LUCA, LUCB, LUCD, 3 poles from hot state.

Tripping curves for control units LUCC

Average operating times at 20 °C according to multiples of the setting current, tolerance : ± 20 %.

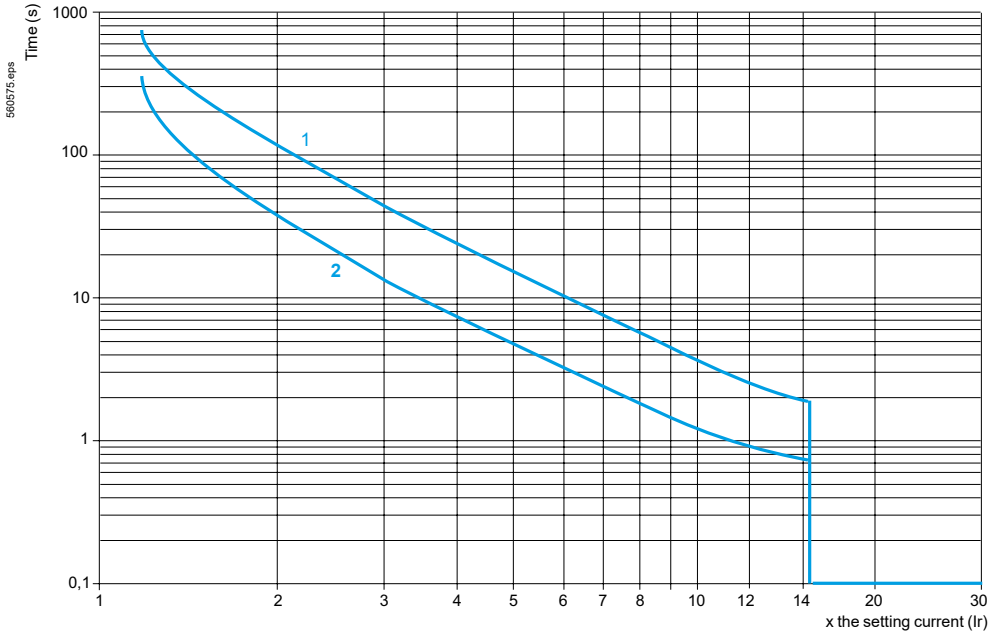

1 LUCC, single-phase, cold state.
2 LUCC, single-phase, hot state.

Ultra motor starters
Ref.

Curves

Current limitation on short-circuit

U_e = 460 V

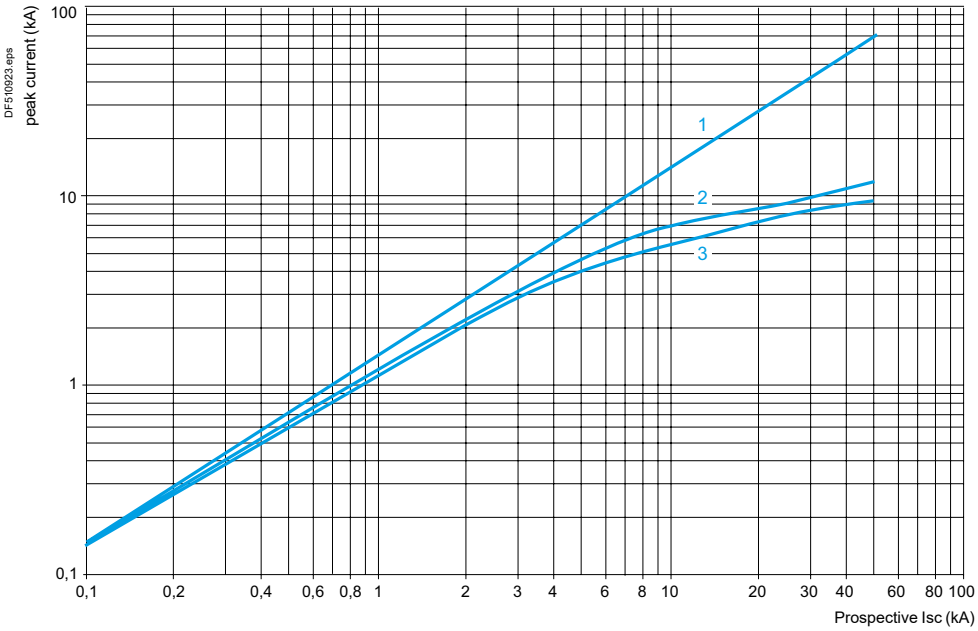

1 Maximum peak current
2 32 A, 38 A power base
3 12 A power base

Thermal limit on short-circuit

U_e = 460 V

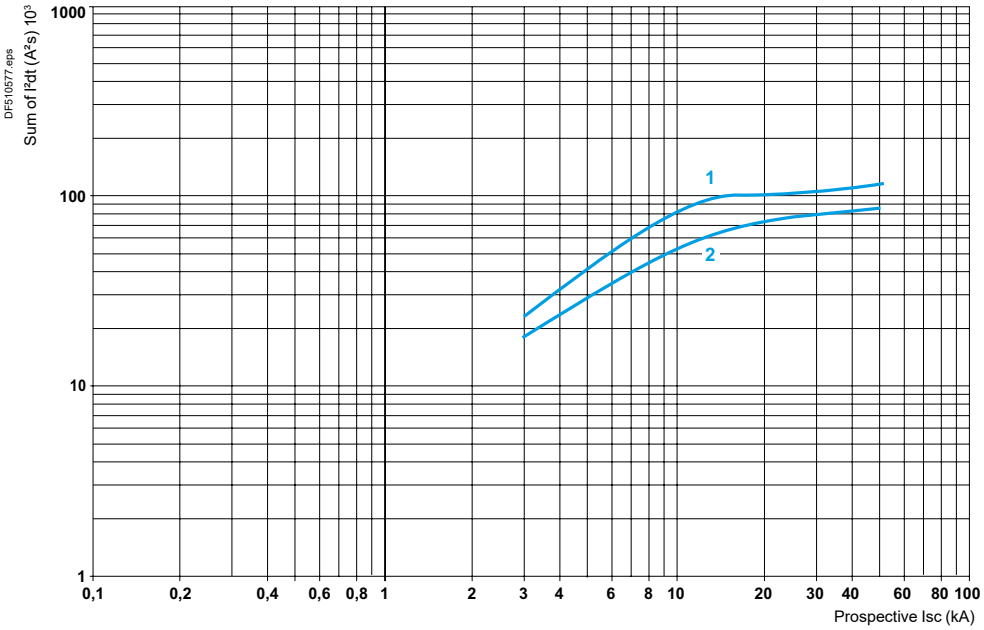

1 32 A, 38 A power base
2 12 A power base

Ultra motor starters
Ref.

Curves

Use in category AC-41

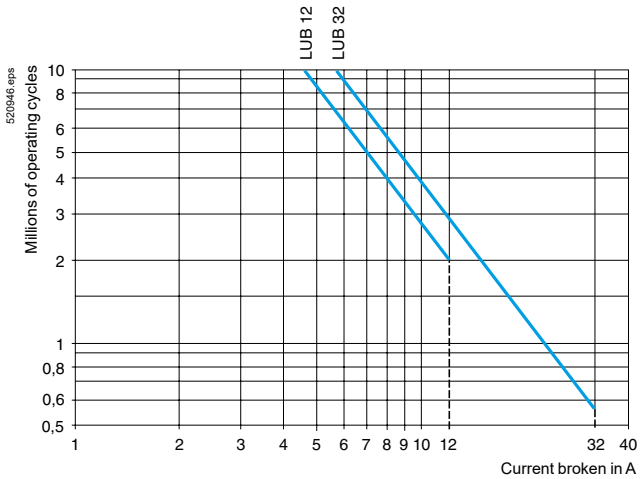

Use in category AC-43

Ue ⩽ 440 V

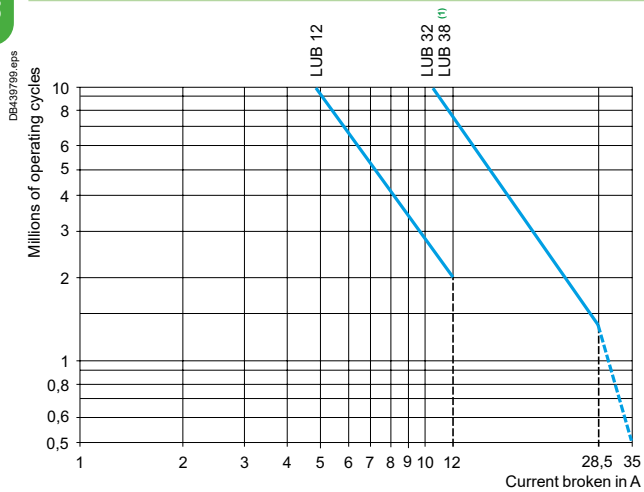

Ue = 690 V

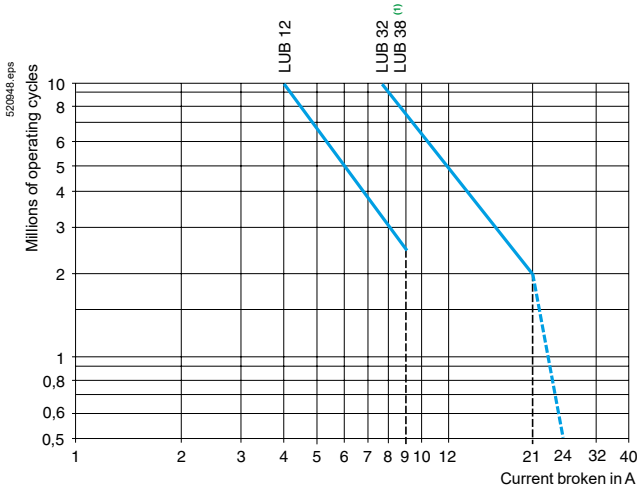

(1) Plain curve: **LUB32** + **LUB38**, doted curve: **LUB38** only.

Curves

Use in category AC-44

Ue ≤ 440 V

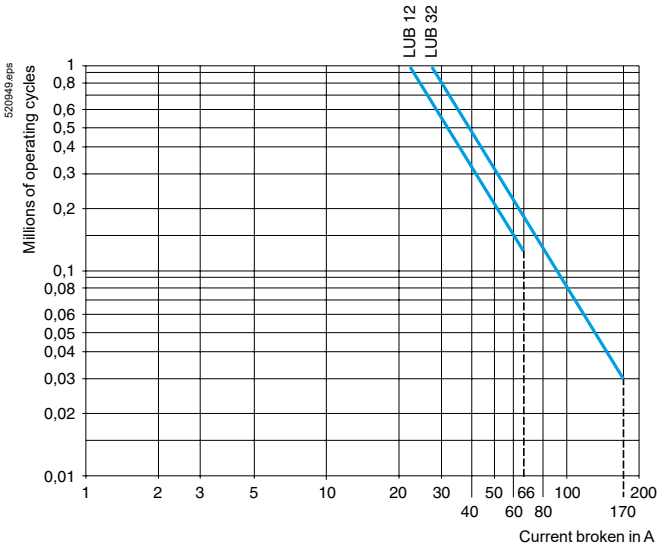

Ue = 690 V

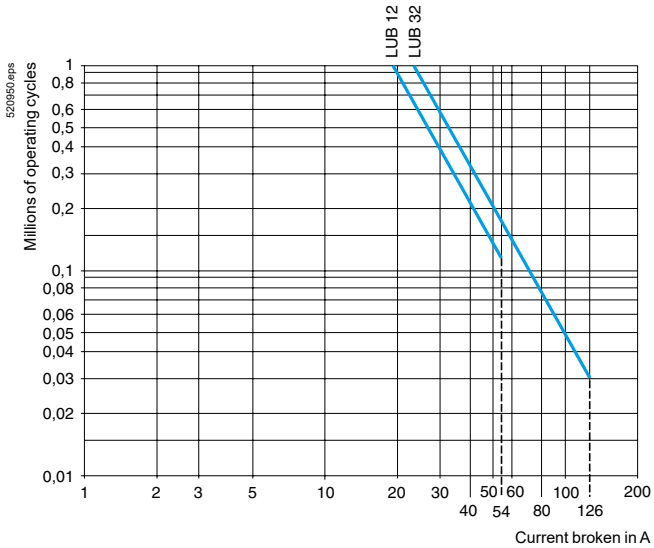

Dimensions

Starter-controllers

LUB: non-reversing

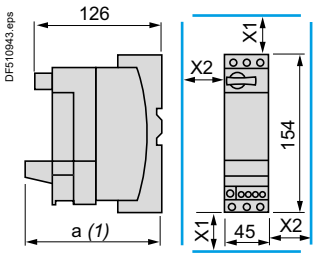

Rail mounting

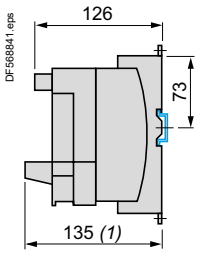

Screw fixing

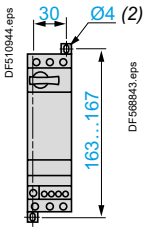

	a
With Modbus module	135
With Advantys STB or CANopen modules	147

Minimum electrical clearance:
X1 = 50 mm for Ue = 440 V and 70 mm for Ue = 500 and 690 V, X2 = 0

LU2B: reversing

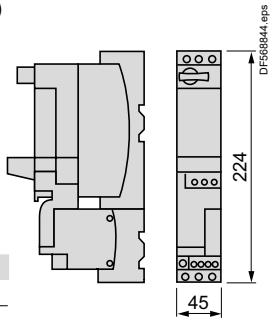

Rail mounting

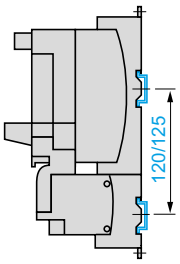

Screw fixing

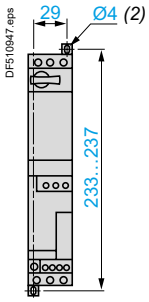

Reverser block for mounting separately from power base

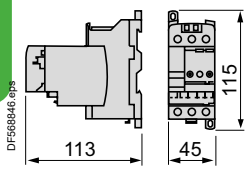

Rail mounting

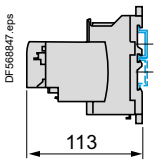

Screw fixing

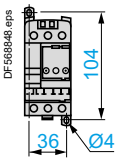

Sets of busbars and plug-in power sockets

GV2G445 and GV2G454

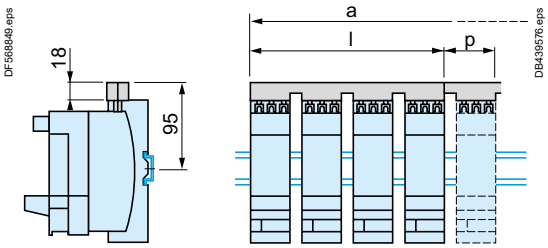

	l	P
GV2G445 (2 x 45)	179	45
GV2G454 (2 x 54)	206	54

	a			
Number of tap-offs	5	6	7	8
GV2G445 (2 x 45)	224	269	314	359
GV2G454 (2 x 54)	260	314	368	422

GV2G●●● with terminal block GV1G09

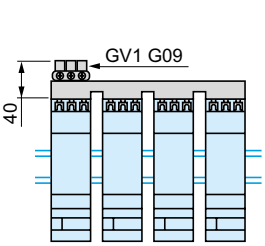

GV2G245 and G254

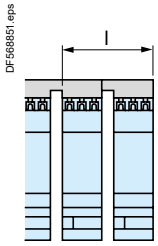

	l
GV2G245 (2 x 45)	89
GV2G254 (2 x 54)	98

GV2G554

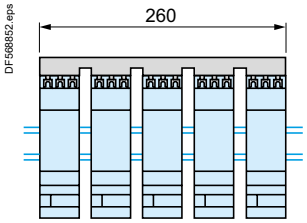

GV2G345 et G354

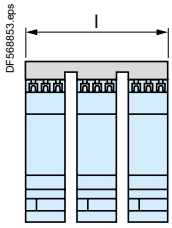

	l
GV2G345 (2 x 45)	**134**
GV2G354 (2 x 54)	**152**

AK5JB144 (3)

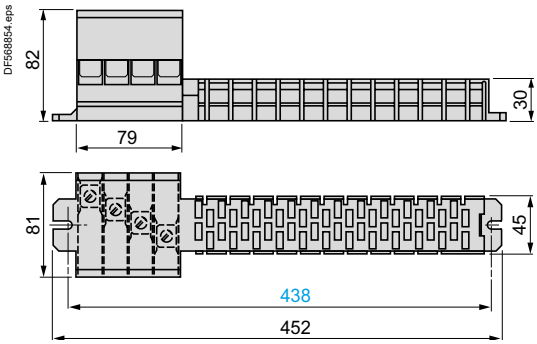

AK5PC13, PC33, PC33L

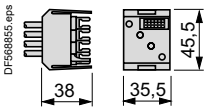

(1) Depth with communication module.
(2) Retractable fixing lugs.
(3) Compatible with LUB12 and LUB32.

References:
pages A4/15 and A4/16
Characteristics:
page A4/44
Curves:
pages A4/56 to A4/59
Schemes:
pages A4/61 to A4/70

Dimensions

Dimensions, mounting

Limiter-disconnector LUALB1
Disconnector LUALB10

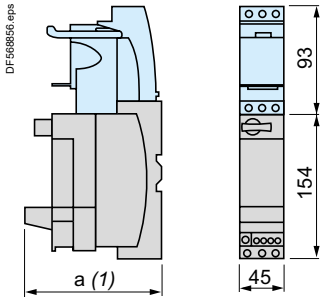

	a
With Modbus module	135
With Advantys STB or CANopen modules	147

Current limiter LA9LB920

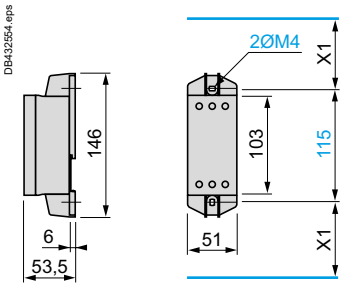

X1: Electrical clearance = 30 mm for Ue ≤ 690 V

Door interlock mechanisms

LU9APN21, LU9APN22, LU9APN24

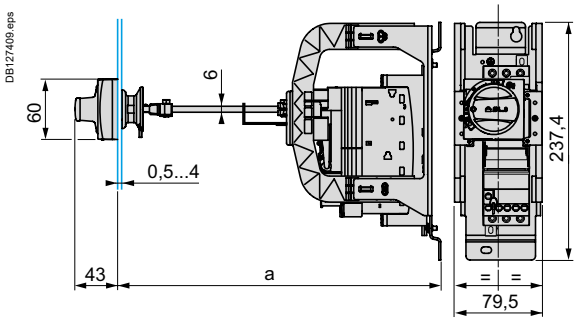

Door cut-out

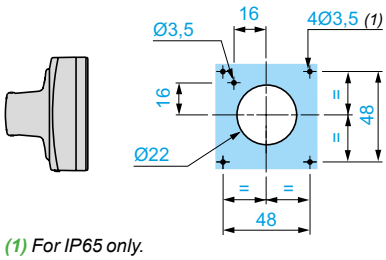

(1) For IP65 only.

	a	
	Mini	**Maxi**
LU9APN●●	191	300
LU9APN●● + GVAPK12	300	483

Splitter boxes

LU9GC3 (Modbus) LU9G02 and LU9G03

Rail mounting Screw fixing

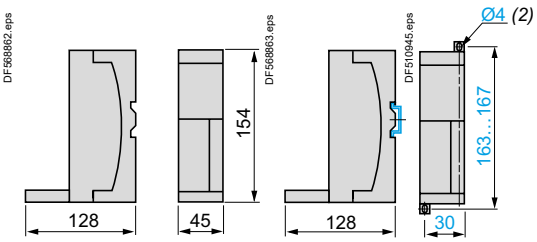

LU9GC7 (PROFIBUS DP)

Rail mounting Screw fixing

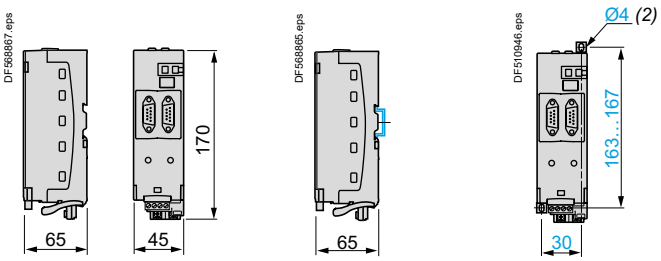

(1) Depth with communication module.
(2) Retractable fixing lugs.

References:
pages A4/24, A4/32, A4/33

Schemes

12, 32, 38 A power bases with standard or advanced control unit

LUB

Non-reversing

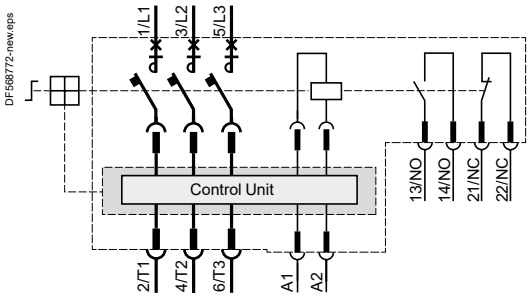

With control unit LUCC

Connection of a single-phase motor

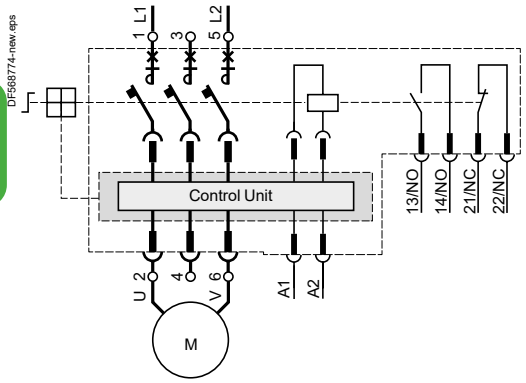

LU2B

Reversing

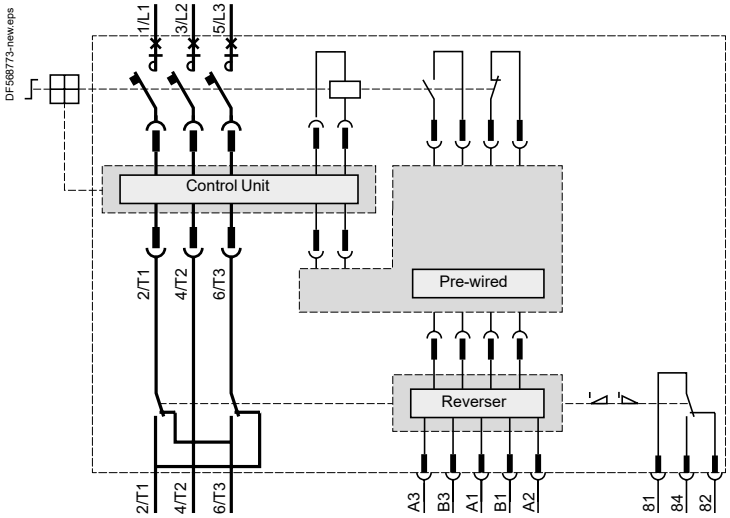

Control terminal block

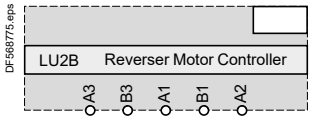

Reverser blocks

LU2M

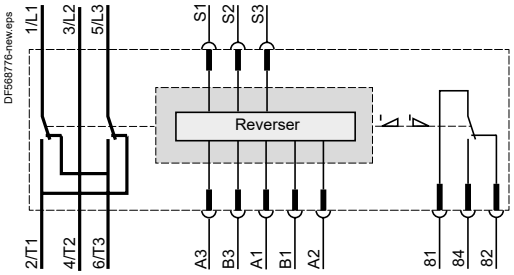

Control terminal block

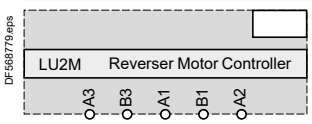

LU6M

Control terminal blocks

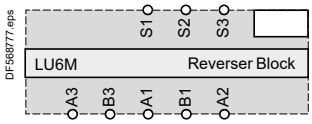

With pre-wired connector LU9MRC

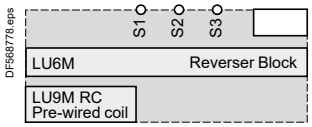

Basic scheme

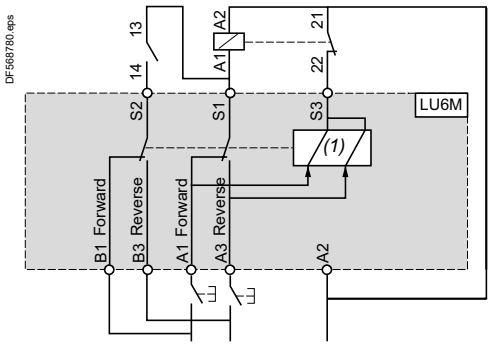

S1 *Start next stage*
S2 *Electrical interlocking*
S3 *Maintaining contact*
B1 *Maintain forward running*
B3 *Maintain reverse running*
A1 *Pulse forward running*
A2 *Common*
A3 *Pulse reverse running*
(1) Electronically operated bistable electromagnet.

Add-on contact blocks

LUA1C11

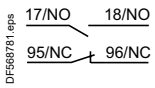

LUA1C20

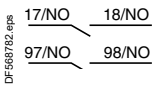

LUA8E20

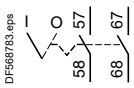

Add-on contact modules

LUFN20

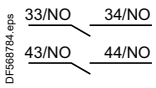

LUFN11

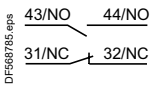

LUFN02

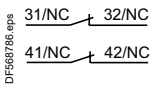

References:
pages A4/15 and A4/16

Characteristics:
pages A4/44 and A4/45

Curves:
pages A4/56 to A4/59

Schemes [1]

Function modules

Alarm
LUFW10

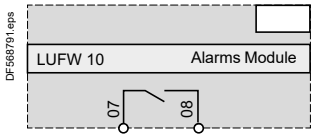

Connection of a motor load indicator module
LUFV2

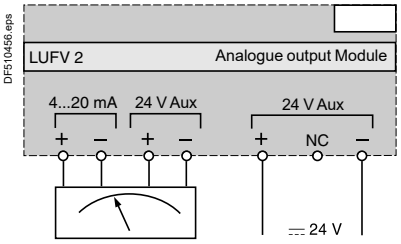

Communication modules

Communication module
ASILUFC51

Without pre-wired coil connection

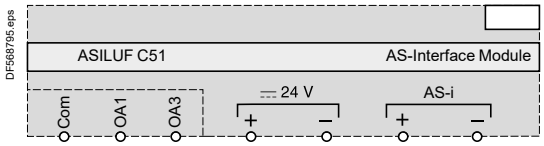

Control via Modbus communication module
LULC033

Without pre-wired coil connection

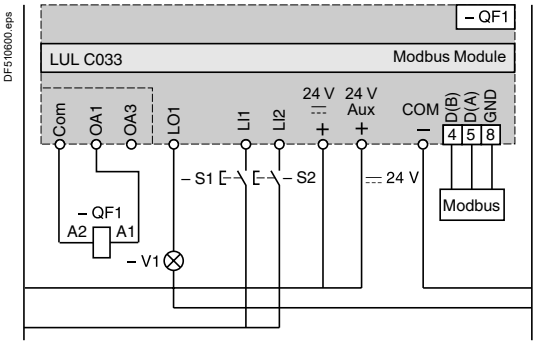

CANopen communication module LULC08

Without pre-wired coil connection

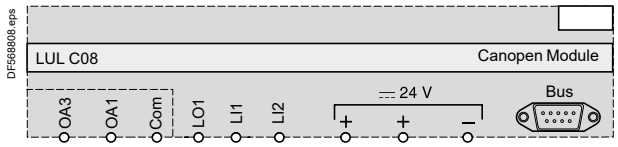

(1) For more details please refer to the Instruction Sheet.

References:
pages A4/18, A4/27

Characteristics:
pages A4/50 to A4/55

Schemes [1]

Communication modules (continued)

Advantys STB communication module LULC15

Without pre-wired coil connection

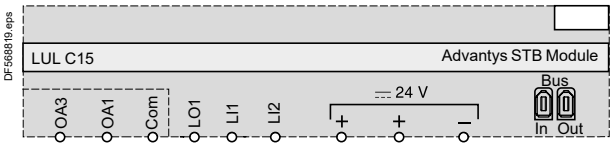

Parallel wiring modules

Without pre-wired coil connection

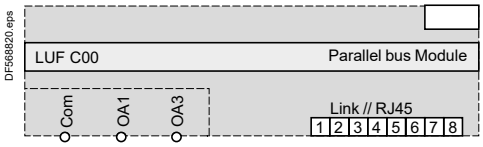

1 Forward running
2 Reverse running
3 Output common
4 Selector in position
5 Pole state
6 Reserved
7 Fault
8 Input common

PROFIBUS DP power supply module LU9GC7

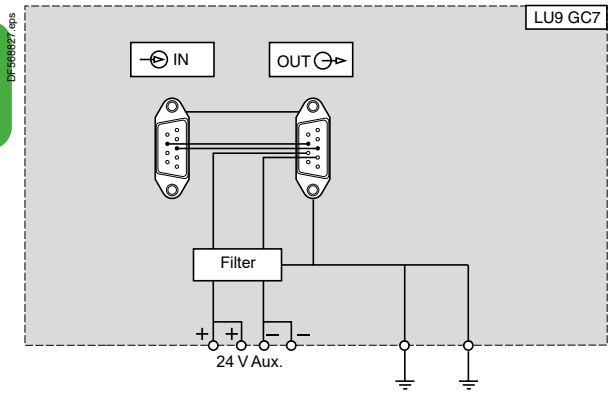

(1) For more details please refer to the Instruction Sheet.

Ultra motor starters
Ref.

Communication modules (continued)

Wiring hub and splitter boxes

Modbus hub LU9GC3

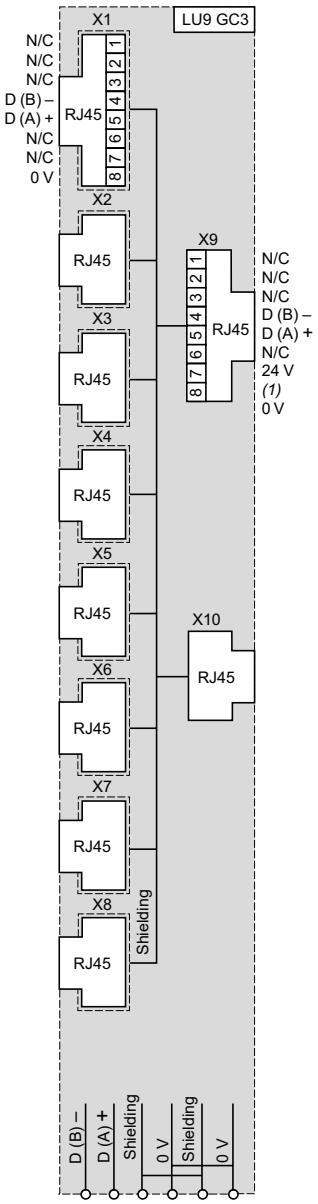

Parallel wiring splitter box LU9G02

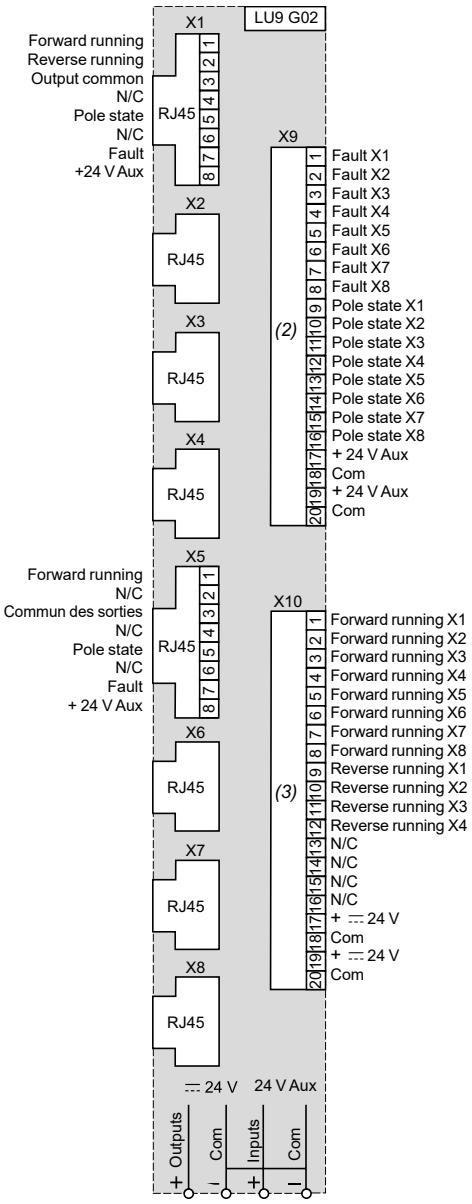

Parallel wiring splitter box LU9G03

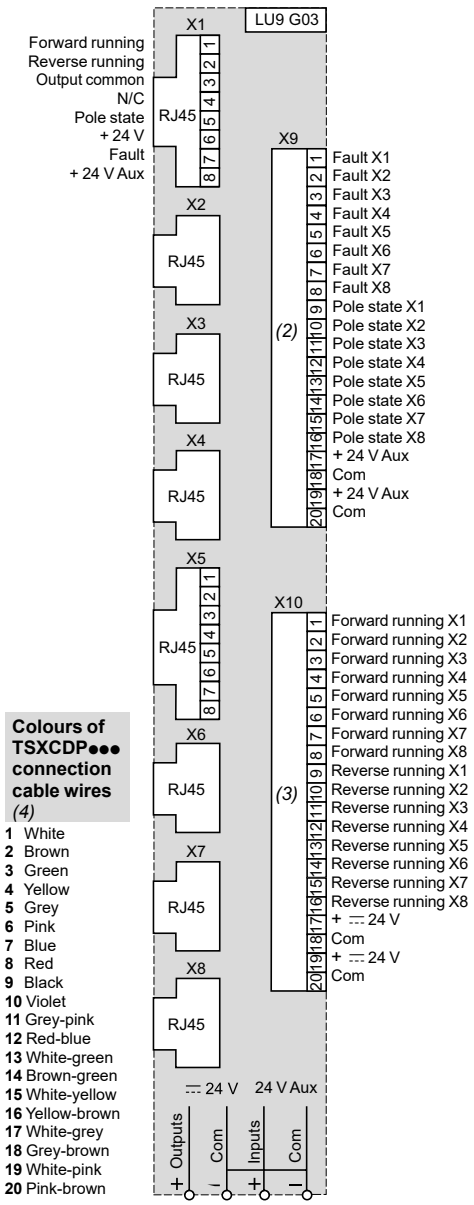

Colours of TSXCDP●●● connection cable wires *(4)*

1 White
2 Brown
3 Green
4 Yellow
5 Grey
6 Pink
7 Blue
8 Red
9 Black
10 Violet
11 Grey-pink
12 Red-blue
13 White-green
14 Brown-green
15 White-yellow
16 Yellow-brown
17 White-grey
18 Grey-brown
19 White-pink
20 Pink-brown

(1) Not connected on connectors X1 to X8. Only present on RJ45 IN and OUT connectors.
(2) 20-way HE10 input connector.
(3) 20-way HE10 output connector.
(4) Wire colours and corresponding HE10 connector pin numbers.

Gateways

LUFP1

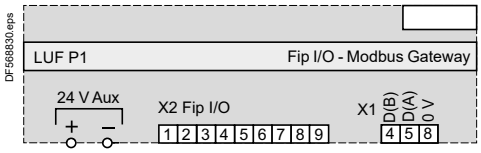

LUFP7

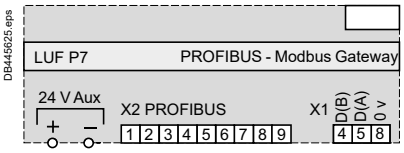

LUFP9

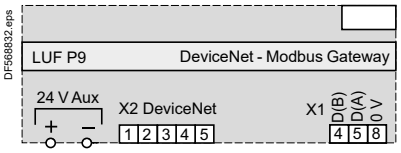

References:
pages A4/24 and A4/31

Dimensions:
pages A4/61 and A4/65

Non-reversing starter-controllers LUB

Connection of thermal overload fault signalling modules LUFDA10

Automatic reset

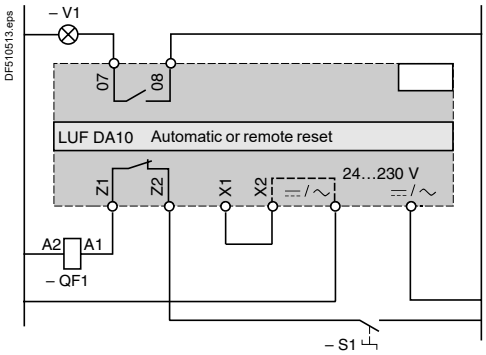

Remote reset

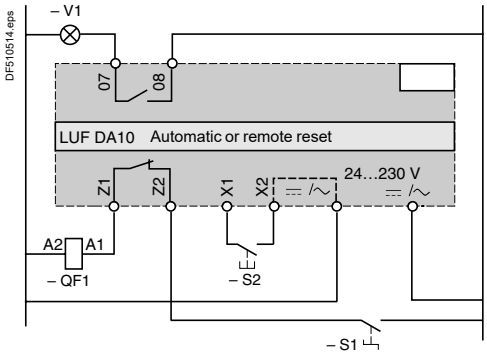

Control by communication modules ASILUFC51

Without pre-wired coil connection

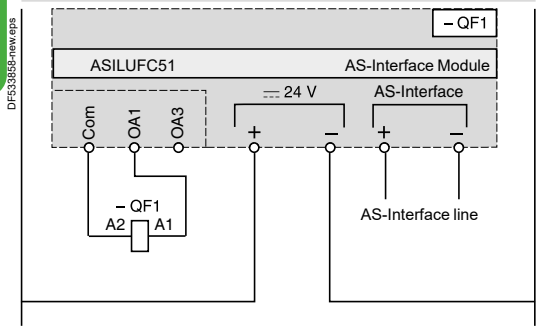

Without pre-wired coil connection
With local control

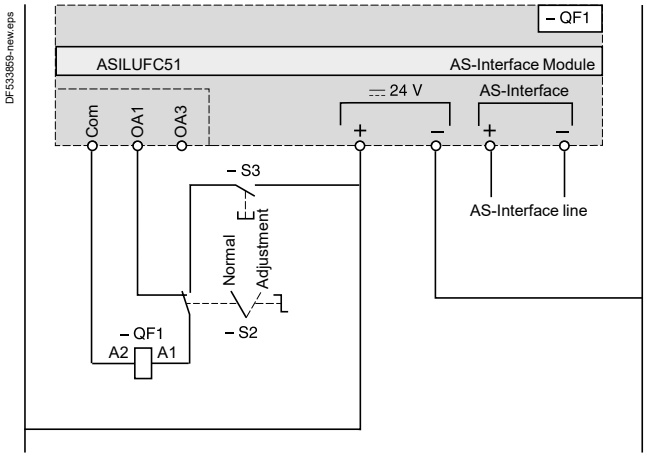

Without pre-wired coil connection
With local control

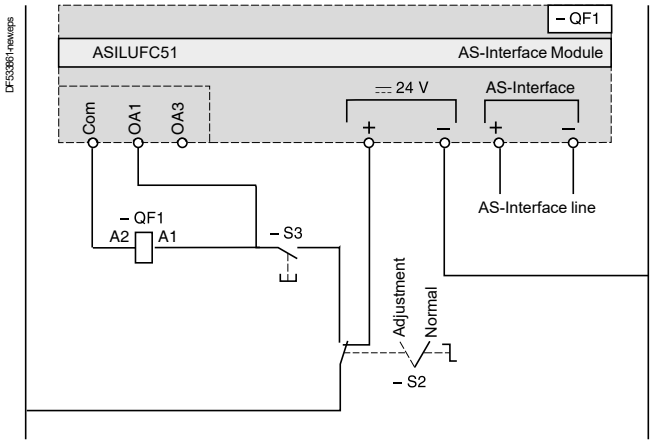

Ultra motor starters
Ref.

References:
pages A4/15 to A4/19

Standard or advanced power base

ON/OFF control (1 direction of rotation)

Push buttons wiring

DB414426_b.eps

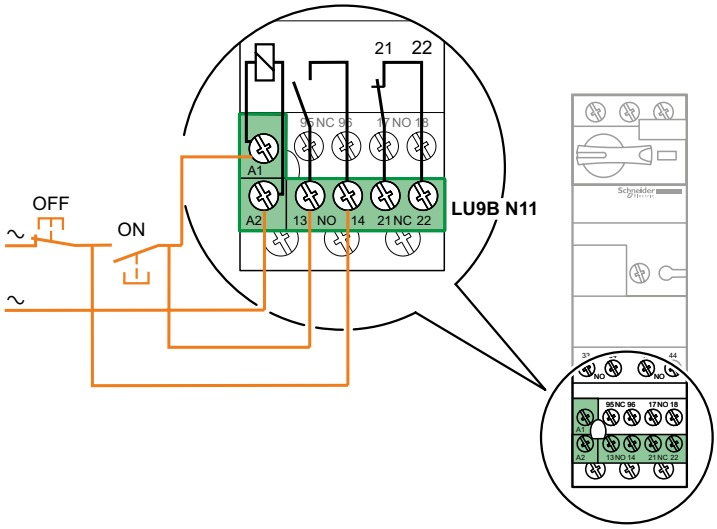

ON indication

"Motor RUN" indicator wiring

DB414428.eps

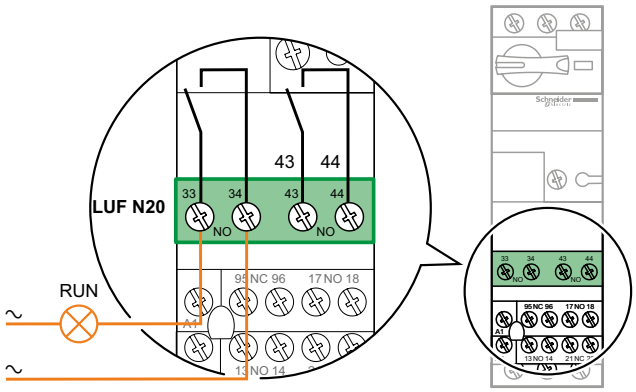

"Motor starter READY" indicator wiring

DB414429.eps

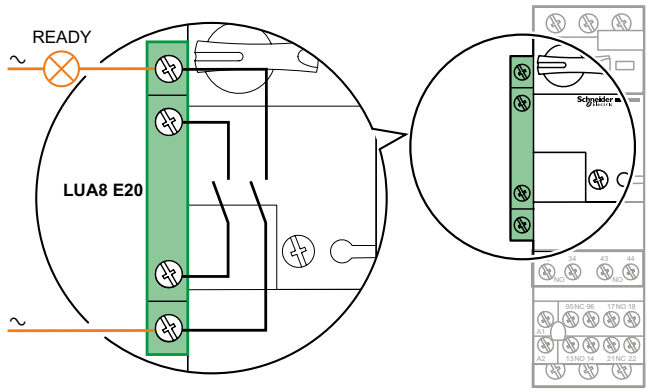

ALARM indication

Protection device status indicator wiring

DB432552.eps

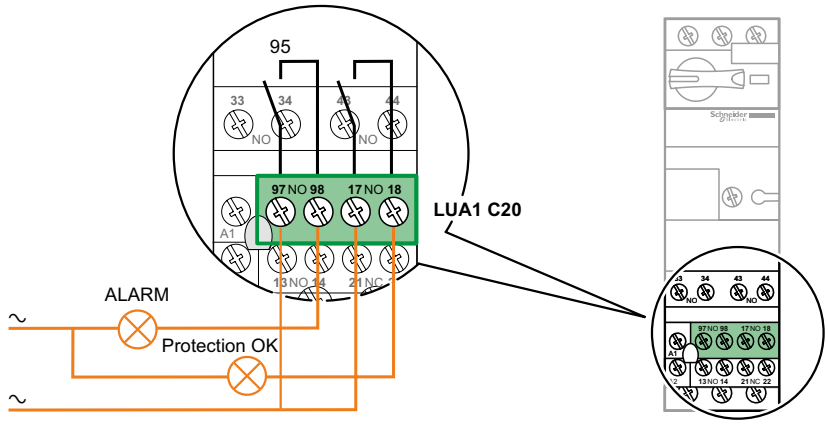

References:
pages A4/15 to A4/18

Reversing starter-controllers LUB

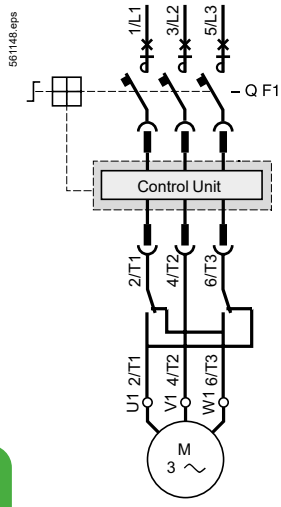

2-wire control via 3-position switch

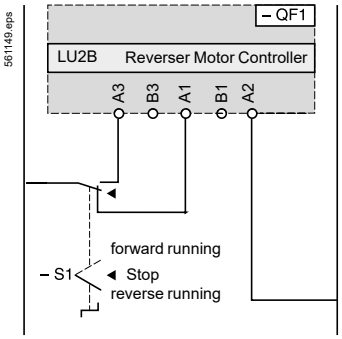

3-wire control, pulsed start with maintaining contact

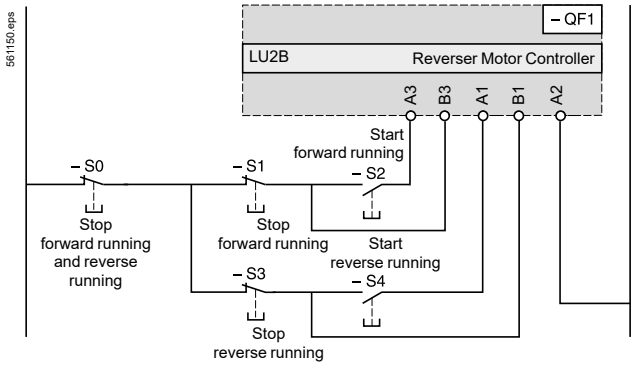

3-wire control, pulsed start with maintaining contact and limit switches

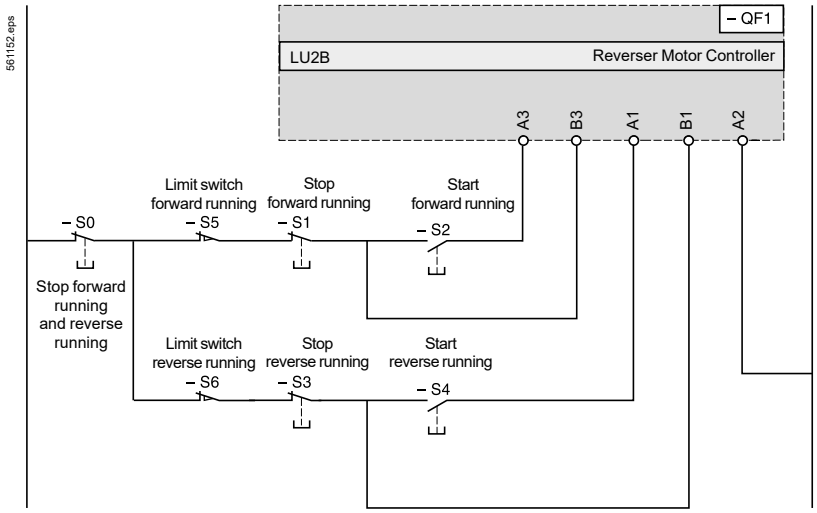

Control by communication modules ASILUFC51

Without pre-wired coil connection
With running direction pilot lights and limit switches

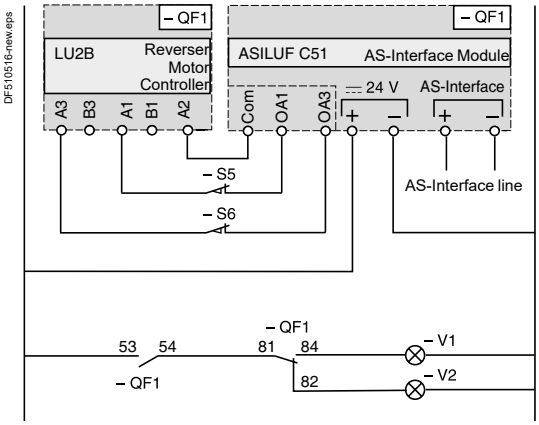

References:
pages A4/15 and A4/27

Reversing starter controllers LU2B (continued)

Control via Modbus communication module LULC033

Without pre-wired coil connection. With local control

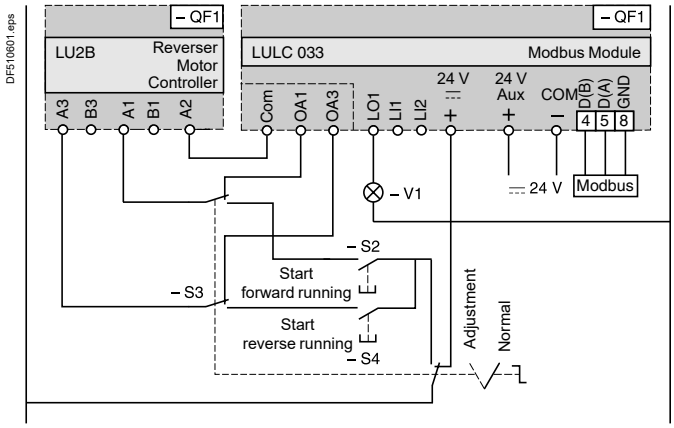

Reversing starter-controllers LUB + LU6M

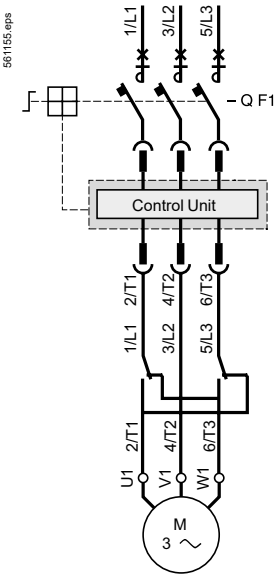

3-wire control, pulsed start with maintaining contact

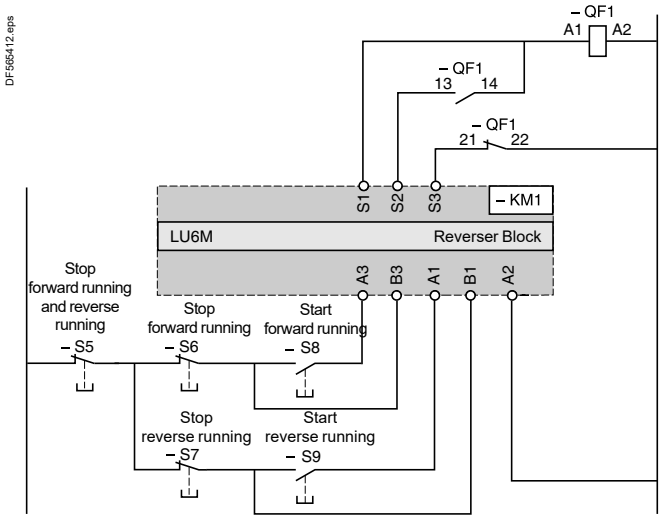

2-wire control via 3-position switch

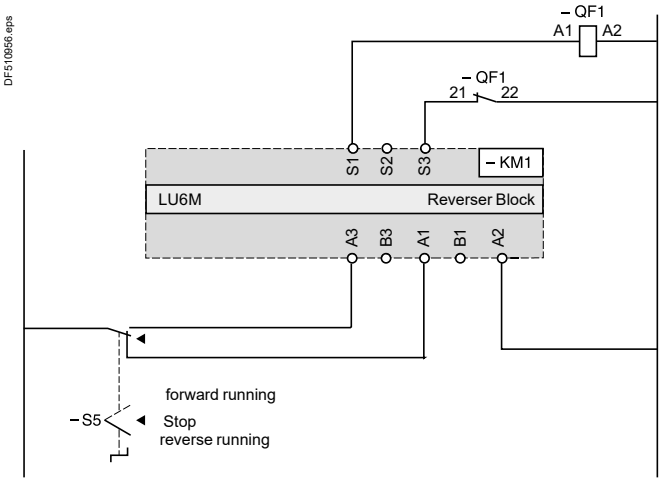

References:
page A4/15

Power base with vertical mounting reverser block

FW/REV/OFF control (2 directions of rotation)	FW/REV control
Push buttons wiring	FW, REV indicators wiring

DB414430R.eps

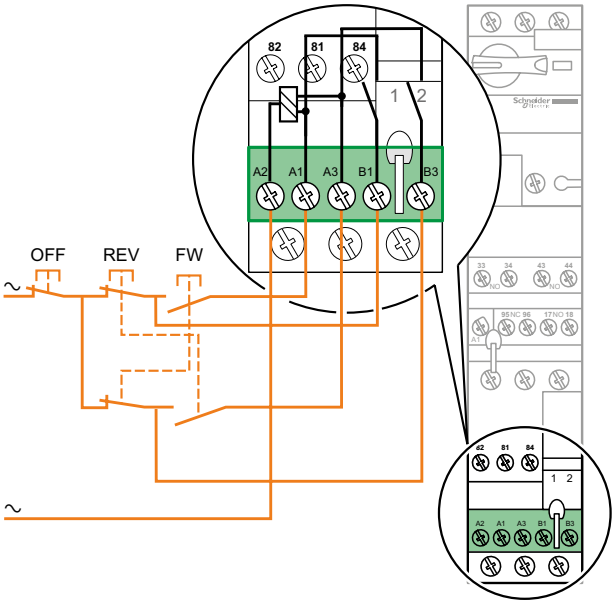

DB414431R.eps

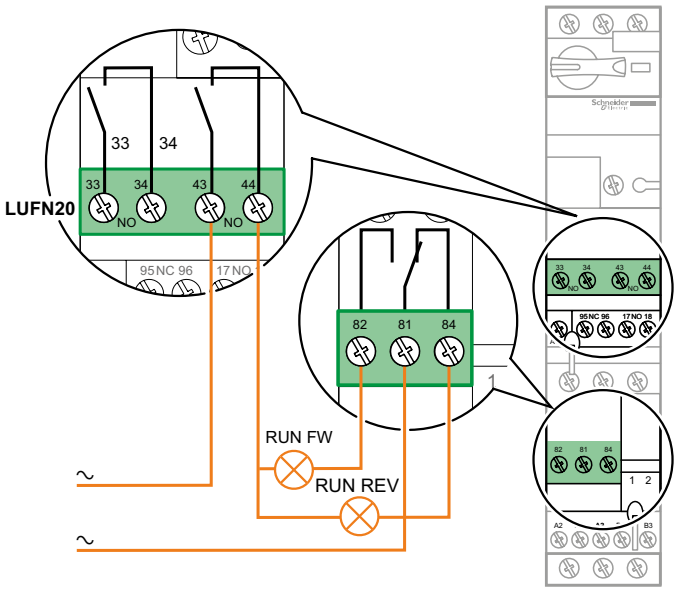

References:
pages A4/15 and A4/18

Environmental characteristics

Type of starter			ATSU01N2●●LT
Conformity to standards			Altistart U01 electronic starters have been developed to conform to the strictest international standards and the recommendations relating to electrical industrial control devices (IEC, EN), in particular standard IEC/EN 60947-4-2.
Electromagnetic compatibility EMC			
	Conducted and radiated emissions		CISPR 11 level B, IEC 60947-4-2, level B
	Harmonics		IEC 1000-3-2, IEC 1000-3-4
	EMC immunity		EN 50082-2, EN 50082-1
	Electrostatic discharge		IEC 61000-4-2 level 3
	Immunity to radiated radio-electrical interference		IEC 61000-4-3 level 3
	Immunity to electrical transients		IEC 61000-4-4 level 4
	Voltage/current impulse		IEC 61000-4-5 level 3
	Conducted and radiated emissions		IEC 61000-4-6 level 3
	Immunity to conducted interference caused by radio-electrical fields		IEC 61000-4-11
	Damped oscillating waves		IEC 61000-4-12 level 3
CE marking			The starters carry CE marking in accordance with the European low voltage directives IEC/EN 60947-4-2.
Product certifications			UL, CSA, C-Tick and CCC
Degree of protection			IP 20
Degree of pollution			2 conforming to IEC/EN 60947-4-2
Vibration resistance			1.5 mm peak to peak from 3 to 13 Hz, 1 gn from 13 to 150 Hz, conforming to IEC/EN 60068-2-6
Shock resistance			15 gn for 11 ms conforming to IEC/EN 60068-2-27
Relative humidity			5…95 % without condensation or dripping water conforming to IEC 60068-2-3
Ambient temperature around the unit	Storage	°C	-25…+70 conforming to IEC/EN 60947-4-2
	Operation	°C	-10…+40 without derating, up to 50°C with current derating of 2 % per °C above 40°C
Maximum operating altitude		m	1000 without derating (above this, derate the current by 2.2 % per additional 100 m)
Operating position Maximum permanent angle in relation to the normal vertical mounting position			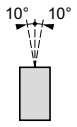

Electrical characteristics

Type of starter			ATSU01N2●●LT
Category of use	Conforming to IEC 60947-4-2		Ac-53b
Rated operating voltage	3-phase ∼ voltage	V	200 - 10 % to 480 + 10 %
Frequency		Hz	50 - 5 % to 60 + 5 %
Output voltage			Maximum 3-phase voltage equal to line supply voltage
Control supply voltage			24 V ⎓, 100 mA ±10 %
Rated operating current		A	6...32
Adjustable starting time		s	1...10
Adjustable deceleration time		s	1...10
Starting torque		%	30.... 80 % of DOL motor starting torque

Type of starter	ATSU		01N206LT	01N209LT	01N212LT	01N222LT	01N232LT
Control power supply consumption			24 V ⎓, 65 mA			24 V ⎓, 100 mA	
Power dissipated	At full load at end of starting	W	1.5	1.5	1.5	2.5	2.5
	In transient state at 5 times the rated operating current	W	61.5	91.5	121.5	222.5	322.5

Type of starter			ATSU01N206LT to ATSU01N222LT			ATSU01N232LT		
Use								
	Starting time	s	1	5	10	1	5	10
	Maximum number of cycles per hour		100	20	10	50	10	5

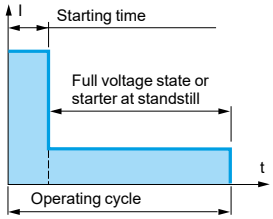

References:
page A4/36

Dimensions:
page A4/73

Schemes:
pages A4/74 to A4/77

Electrical characteristics (continued)

Logic input power supply (electrically isolated between power and control) + 24 V, COM			24 V ±10 % Isolated Max. current 100 mA
Logic inputs LI1, LI2, BOOST Stop, run and boost on start-up functions			Logic inputs with impedance 27 kΩ; 24 V power supply (U max 40 V) Max. current 8 mA State 0 if U < 5 V and I < 0.2 mA State 1 if U > 13 V and I > 0.5 mA
Logic output LO1 End of starting signal			Open collector logic output: External 24 V power supply (minimum 6 V, maximum 30 V) Max. current 200 mA
Relay output R1A R1C			Normally open (N/O) contact Minimum switching capacity: 10 mA for 6 V ⎓ Maximum switching capacity on inductive load (cos φ = 0.5 and L/R = 20 ms): 2 A for 250 V ∼ or 30 V ⎓ (AC-15) Maximum operating voltage 440 V
LED signalling	Green LED		Starter powered up
	Yellow LED		Nominal voltage reached

Connections (maximum connection capacity and tightening torque)

Power circuit			**Connection to Ø4 mm screw clamps**	
Flexible wire without cable end	1 conductor	**mm²**	1.5…10	8 AWG
	2 conductors	**mm²**	1.5…6	10 AWG
Flexible wire with cable end	1 conductor	**mm²**	1…6	10 AWG
	2 conductors	**mm²**	1…6	10 AWG
Rigid wire	1 conductor	**mm²**	1…10	8 AWG
	2 conductors	**mm²**	1…6	10 AWG
Tightening torque		**N.m**	1.9…2.5	
Control circuit			**Screw connector**	
Flexible wire without cable end	1 conductor	**mm²**	0.5…2.5	14 AWG
	2 conductors	**mm²**	0.5…1.5	16 AWG
Flexible wire with cable end	1 conductor	**mm²**	0.5…1.5	16 AWG
	2 conductors	**mm²**	0.5…1.5	16 AWG
Rigid wire	1 conductor	**mm²**	0.5…2.5	14 AWG
	2 conductors	**mm²**	0.5…1	17 AWG
Tightening torque		**N.m**	0.5	

Torque characteristics (typical curves)

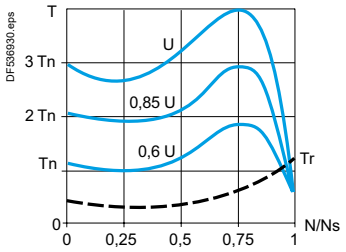

The diagram opposite shows the torque/speed characteristic of a cage motor in relation to the supply voltage.
The torque varies in line with the square of the voltage at a fixed frequency. The gradual increase in the voltage prevents the instantaneous current peak on power-up.

Ultra motor starters
Ref.

Dimensions

Ultra combination (non-reversing power base) and ATSU01N206LT to ATSU01N212LT

Mounting on ⊥ (35 mm) rail with VW3G4104 connector

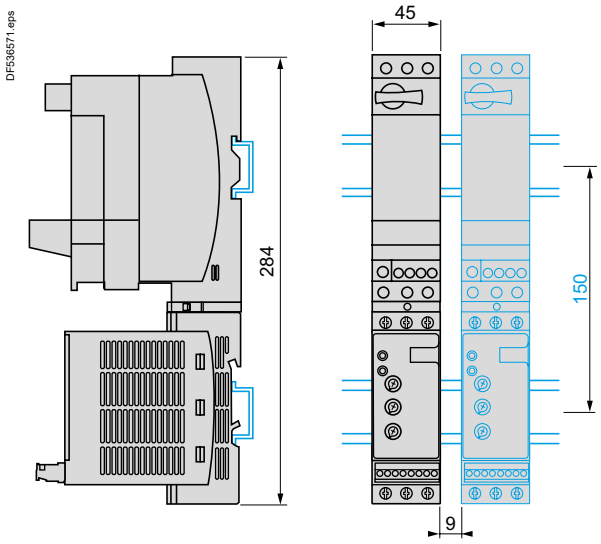

Ultra combination (non-reversing or reversing power base) and ATSU01N206LT to ATSU01N212LT

Side by side mounting

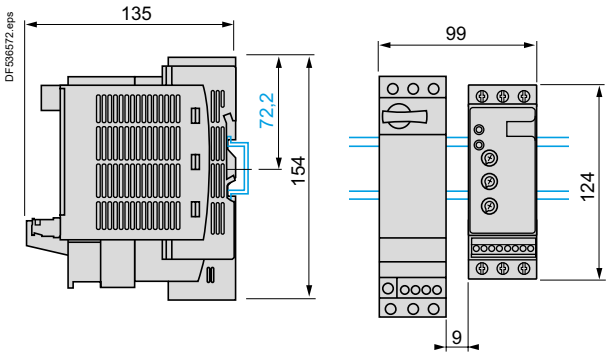

Ultra combination (non-reversing power base) and ATSU01N222LT to ATSU01N232LT

Mounting on ⊥ (35 mm) rail with VW3G4104 connector

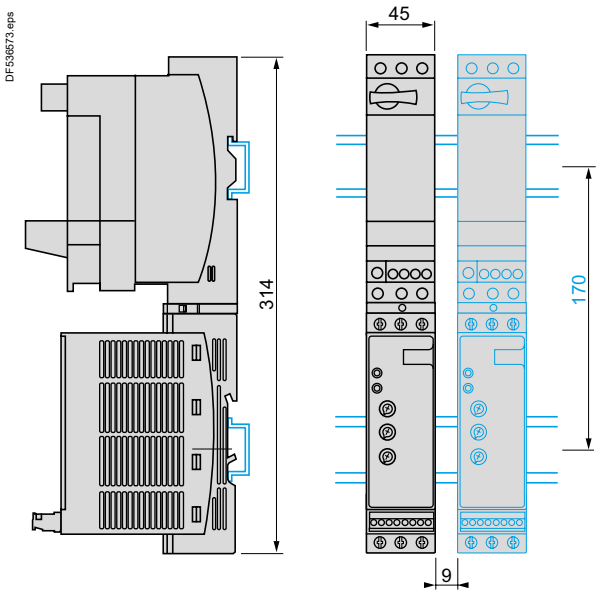

Ultra combination (non-reversing or reversing power base) and ATSU01N222LT to ATSU01N232LT

Side by side mounting

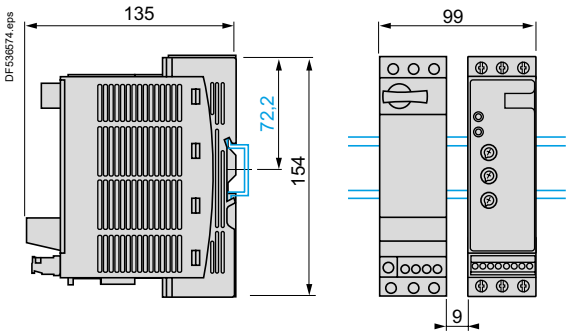

VW3G4104 connector

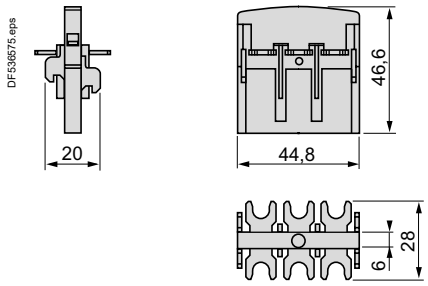

Ultra motor starters
Ref.

References:
page A4/36

Characteristics:
pages A4/71 and A4/72

Schemes:
pages A4/74 to A4/77

ATSU01N2●●LT soft start/soft stop units

Power wiring

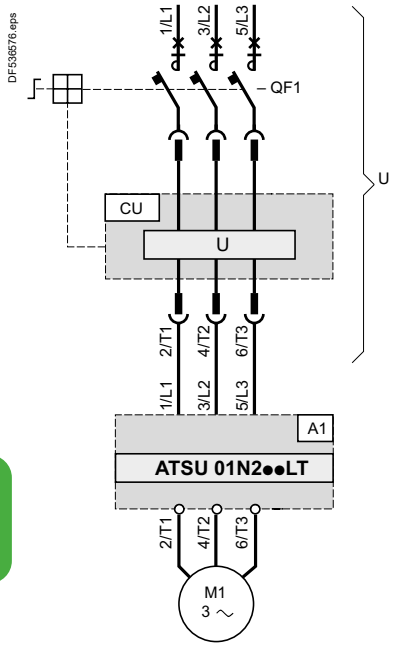

Power wiring with reversing unit

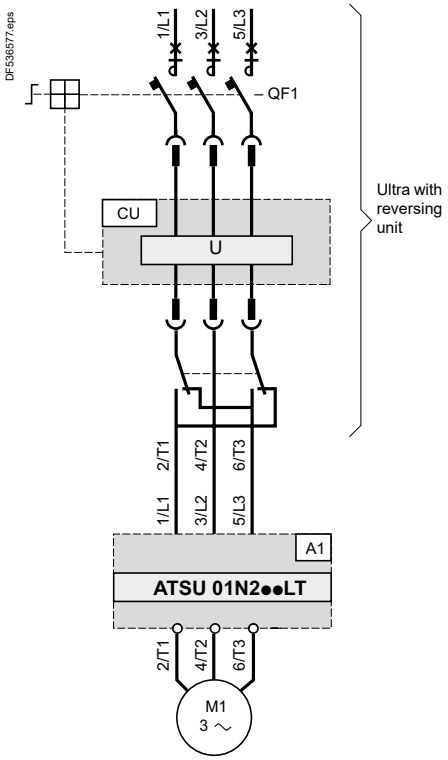

Compatible components

Code	Description
A1	Soft start/soft stop unit
QF1	Ultra controller-starter
CU	Ultra control unit

ATSU01N2●●LT soft start/soft stop units *(continued)*

Automatic 2-wire control

Without deceleration

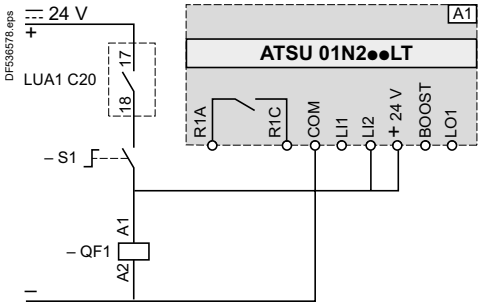

With and without deceleration

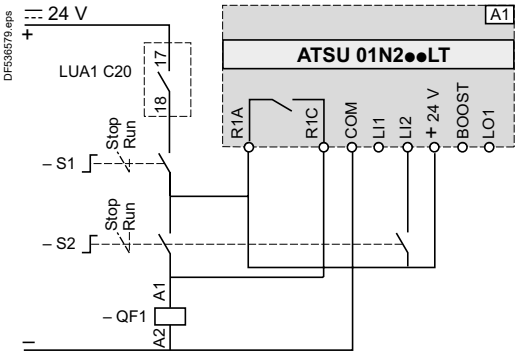

Functional diagrams

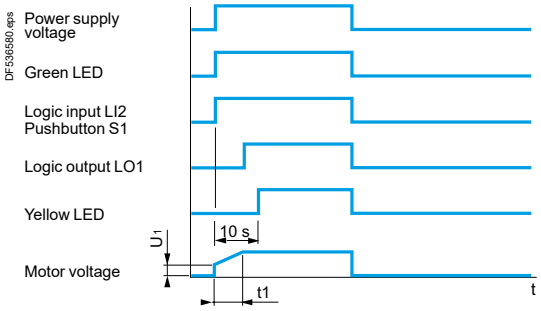

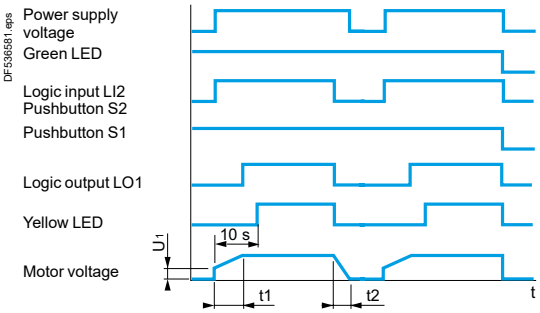

Automatic 3-wire control

Without deceleration

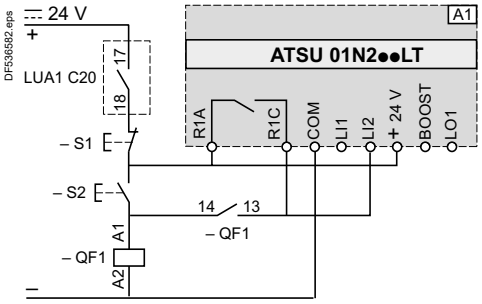

With deceleration

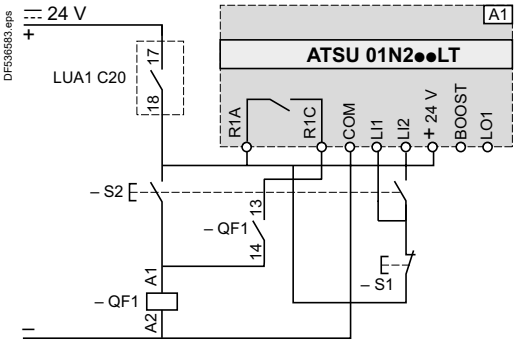

Functional diagrams

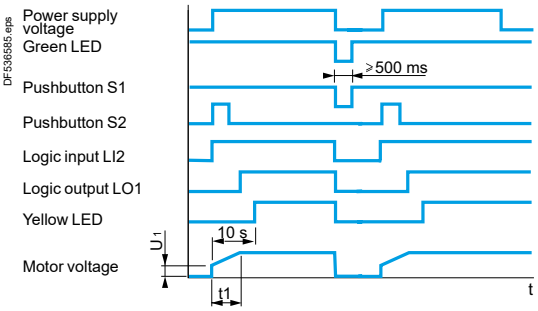

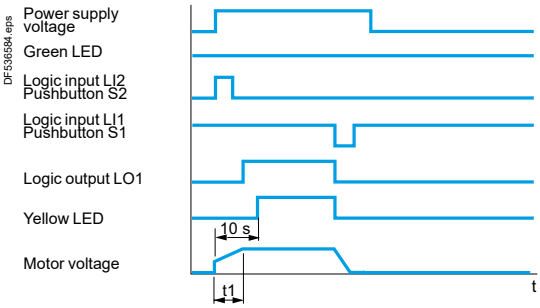

A1: Soft start/soft stop unit
S1, S2: XB4B or XB5B pushbuttons
QF1: Ultra controller-starter
t1: Acceleration time can be controlled by a potentiometer
t2: Deceleration time can be controlled by a potentiometer
U_1: Starting time can be controlled by a potentiometer

References:
page A4/36

Characteristics:
pages A4/71 and A4/72

Dimensions:
page A4/73

ATSU01N2●●LT soft start/soft stop units *(continued)*

Automatic 3-wire control, with reversing unit

Without deceleration

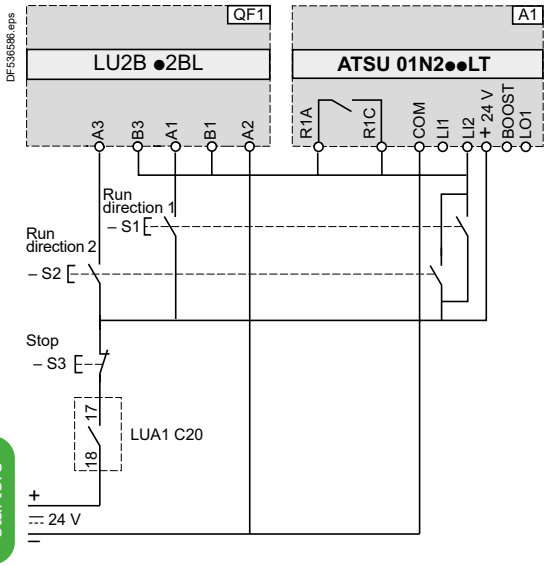

With deceleration

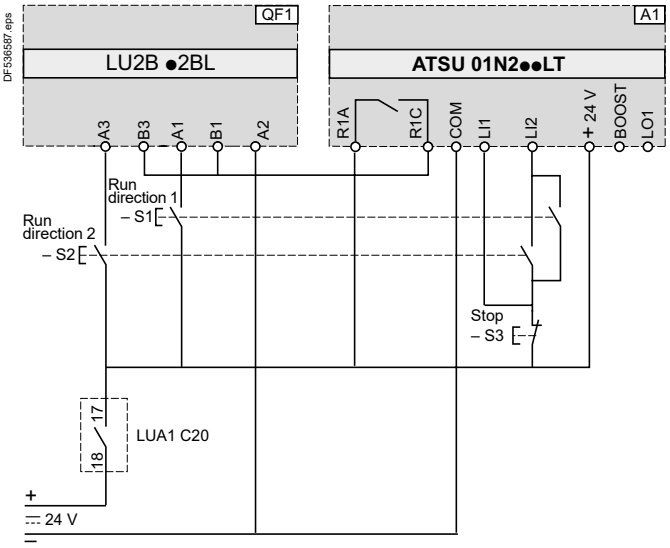

QF1: Ultra controller-starter with reversing unit
A1: Soft start/soft stop unit
S1, S2, S3: XB4B or XB5B pushbuttons
S3: minimum depression time 500 ms

QF1: Ultra controller-starter with reversing unit
A1: Soft start/soft stop unit
S1, S2, S3: XB4B or XB5B pushbuttons

Boost on starting and end of starting signal

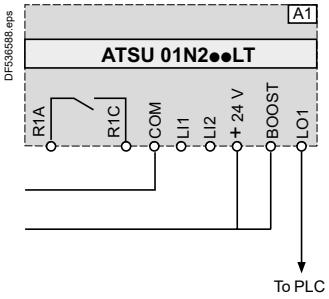

A1: Soft start/soft stop unit

ATSU01N2●●LT soft start/soft stop units *(continued)*

Automatic control with Modbus communication module, with and without deceleration

Without reversing unit

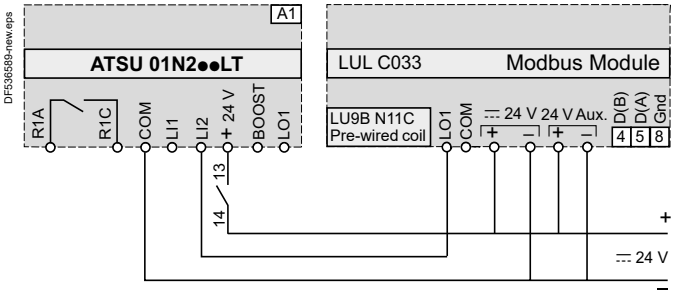

Function	Register	Bit	Value
Powering down U and ATSU			
–	704	0	0
Automatic control without deceleration			
Run	700	0	1
Stop	704	0	0
Automatic control with deceleration			
Run	700	0	1
Soft stop	700	0	0

A1: Soft start/soft stop unit

With reversing unit

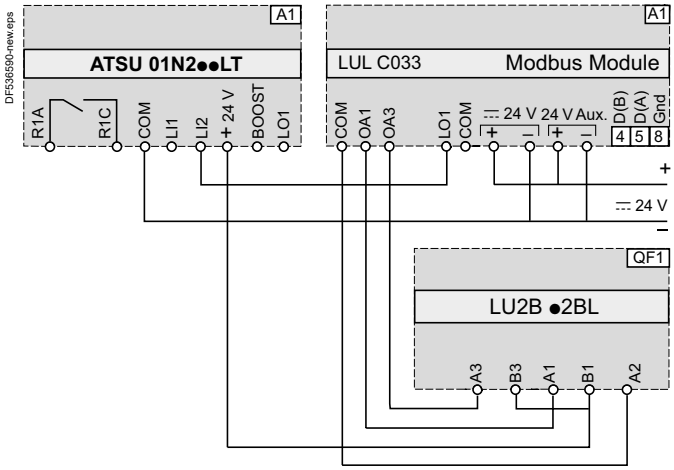

Function	Register	Bit	Value
Powering up U and ATSU			
Forward	704	0	1
Reverse	704	1	1
Powering down U and ATSU			
Forward	704	0	0
Reverse	704	1	0
Automatic control without deceleration			
Run	700	0	1
Stop forward	704	0	0
Stop reverse	704	1	0
Automatic control with deceleration (forward or reverse)			
Run	700	0	1
Soft stop	700	0	0

A1: Soft start/soft stop unit
QF1: Ultra controller-starter with reversing unit

Automatic control with AS-Interface communication module, without deceleration

Without reversing unit

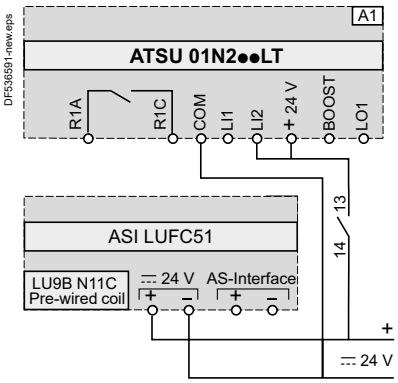

Function	Bit	Value
Power-up and automatic control without deceleration		
Run	D0	1
Stop	D0	0

A1: Soft start/soft stop unit

With reversing unit

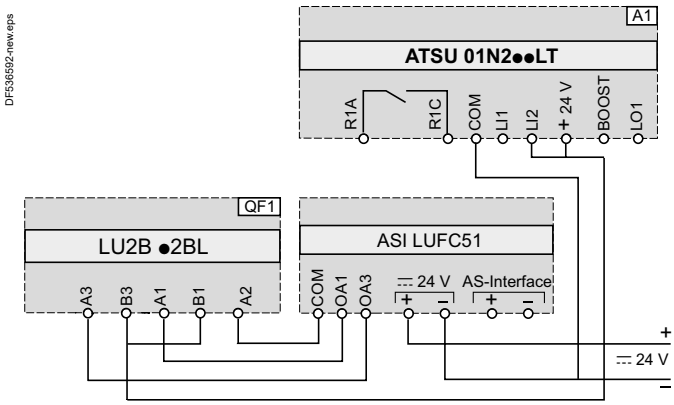

Function	Bit	Value
Power-up and automatic control without deceleration		
Run forward	D0	1
Stop	D0	0
Run reverse	D1	1
Stop	D1	0

A1: Soft start/soft stop unit
QF1: Ultra controller-starter with reversing unit

References:
page A4/36

Characteristics:
pages A4/71 and A4/72

Dimensions:
page A4/73

Life Is On | Schneider Electric

Complementary technical information

Coordination between protection and control components

Type of information	Page
Types of coordination, according to the standard currents in the circuit to be considered	A5/3
Selection of the coordination type	A5/4
AC-3e Coordination Tables — **AC-3e category**	A5/5
Suggested coordinated Direct-On-Line motor starter combinations	
Fuses + Contactor + Overload relay	A5/5
Thermal magnetic circuit breaker + Contactor	A5/11
Magnetic circuit breaker + Contactor + Overload relay	A5/18
Suggested coordinated Star-Delta motor starter combinations	
Fuses + Contactors + Overload relay	A5/27
Thermal magnetic circuit breaker + Contactors	A5/31
Magnetic circuit breaker + Contactors + Overload relay	A5/37
Suggested coordinated Resistive load protection and control	
Fuses + Contactors	A5/42
Thermal magnetic circuit breaker + Contactors	A5/43
Suggested coordinated TeSys island motor starter combinations	
Protection Components / Starters - Coordination - IEC	A5/44
Protection Components / Starters - SCCR Ratings – UL	A5/51
AC-3 Coordination Tables — **AC-3 category**	A5/52
Suggested coordinated Direct-On-Line motor starter combinations	
Fuses + Contactor + Overload relay	A5/52
Thermal magnetic circuit breaker + Contactor	A5/58
Magnetic circuit breaker + Contactor + Overload relay	A5/65
Suggested coordinated Star-Delta motor starter combinations	
Fuses + Contactor + Overload relay	A5/74
Thermal magnetic circuit breaker + Contactors	A5/78
Magnetic circuit breaker + Contactors + Overload relay	A5/83

Complementary technical information

Suggested coordinated TeSys island motor starter combinations

Protection Components / Starters - Coordination - IEC	A5/87
Protection Components / Starters - SCCR Ratings – UL	A5/94

Contactors: Utilisation categories – Standard characteristics – Selection tables per categorie

Definition: utilisation categories : AC-1, AC-2, AC-3, etc...	A5/95
Definition: contactor standard characteristics	A5/96
Contactor selection tables per utilisation category	A5/98

Contactors for specific application – Design information

Selection of contactors for lighting circuits	A5/112
Selection of contactors for heating circuits	A5/118
Selection of contactors for switching primaries of 3P LV/LV transformers	A5/120
Selection of contactors for switching 3P capacitor banks (factor correction)	A5/121
Selection of contactors auto-transformer starting	A5/122
Contactors for rotor circuits of slip-ring motors	A5/124
Design of long distance remote control for contactors	A5/126
Current of asynchronous squirrel cage motors at nominal load	A5/130

Standards – Protection against contact – Protective treatments

International standards and certifications	A5/131
Protection against accidental direct contacts / IP codes	A5/133

Life Is On Schneider Electric

Type 1 and type 2 coordination according to the standard

The standard defines tests at different levels of current; the purpose of these tests is to place the equipment in extreme conditions.
The standard defines 2 types of coordination, according to the condition of the components after testing:
type 1,
type 2.
To determine the type of coordination, the standard requires that the behaviour of the equipment be tested under overload and short-circuit conditions for 3 fault current values, covering overload and short-circuit conditions.

Type 1 coordination

Type 1 coordination requires that in a short-circuit condition, the contactor or starter must not present any danger to personnel or installations and must not be able to resume operation without repair or the replacement of parts.

Type 2 coordination

Type 2 coordination requires that In a short-circuit condition, the contactor or starter must not present any danger to personnel or installations and must subsequently be able to resume operation. The risk of contact welding is permissible; in this case, the manufacturer must indicate measures to be taken regarding maintenance of the equipment.

Type 2 coordination increases reliability of operation.

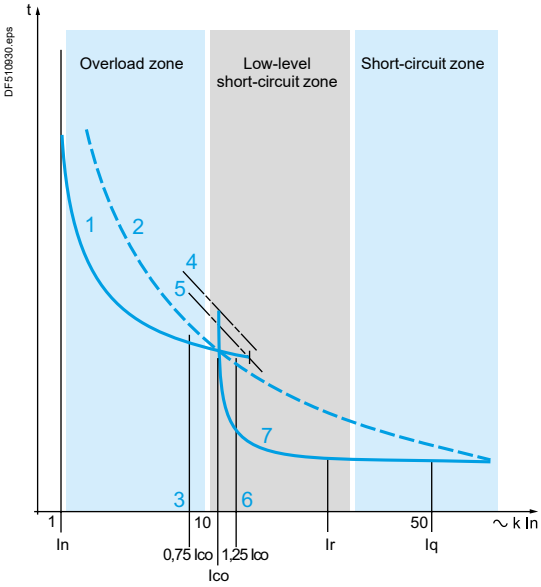

1 Thermal overload relay curve.
2 Fuse.
3 Tripping of thermal overload relay only.
4 Thermal limit of the circuit breaker.
5 Thermal overload relay limit.
6 Current broken by the SCPD [(1)].
7 Circuit breaker magnetic trip.

Current values

Current "Ico" (overload I < 10 In)

The thermal overload relay associated with the contactor provides protection against this type of fault, up to a value Ico (see curve) defined by the manufacturer.

Standard IEC 60947-4-1 specifies the 2 current values to be used for checking coordination between the thermal overload relay and the short-circuit protection device:
- at 0.75 Ico only the thermal overload relay must trip,
- at 1.25 Ico the short-circuit protection device must operate.

Current "r" (low level short-circuit 10 < I < 50 In)

The main cause of this type of fault is the deterioration of insulating materials. Standard IEC 60947-4-1 defines an intermediate short-circuit current "r". This test current makes it possible to check whether the protection device is providing protection against low-level short-circuits.

Operational current Ie (AC-3) (A)	**Current "r"** (kA)
Ie ≤ 16	1
16 < Ie ≤ 63	3
63 < Ie ≤ 125	5
125 < Ie ≤ 315	10
315 < Ie ≤ 630	18
630 < Ie ≤ 1000	30

Current "Iq" (short-circuit > current "r")

This type of fault corresponds to a dead short and is relatively rare. It can be caused by a connection error during maintenance work. Short-circuit protection is provided by fast operating devices.

Standard IEC 60947-4-1 defines a current "Iq". The coordination tables supplied by Schneider Electric are based on a current "Iq" that is generally ≥ 50 kA.

(1) SCPD: short-circuit protection device.

Coordination between protection and control components

Selection

No coordination

Considerable risks to both persons and equipment.

Not authorised by standards:
- NF C 15-100 and IEC 60364-1, article 133-1 (installation regulations),
- EN/IEC 60204-1, article 7 (electrical equipment in machines),
- IEC 60947-4-1, article 8.2.5. (starters)

Type 1 coordination

The most frequently used solution.

- Equipment costs are lower.
- Reliability of operation is not a requirement.
- Before restarting, it may be necessary to repair the motor starter.

Consequences:
- significant amount of machine downtime,
- skilled maintenance personnel required to repair, check, obtain supplies.

Example: air conditioning in commercial premises.

Type 2 coordination

This solution ensures reliability of operation.

Consequences:
- reduced machine downtime,
- reduced maintenance after a short-circuit.

Example: escalators.

Total coordination

With this solution, no damage or mis-adjustment is permissible and reliability of operation is guaranteed.

Consequences:
- immediate return to service,
- no special precautions required.

Examples: smoke extraction, fire-fighting pumps.

Life Is On Schneider Electric

AC-3e category

Coordination: Fuses (NFC, DIN type aM) + Contactor + Overload relay

22 to 75 kW at 400/415, 440 and 500 V: type 1 coordination

Standard power ratings of 3-phase motors 50/60 Hz in category AC-3e						Fuse carrier [1] (basic block)	aM fuses		Contactor	Thermal overload relay class 10	
400/415 V		440 V		500 V		Reference	Size	Rating	Reference [2]	Reference	Setting range
P	Ie	P	Ie	P	Ie						
kW	A	kW	A	kW	A			A			A
22	41	**22**	39	**30**	44	**GS●J**	22 x 58	50	**LC1D50A**	**LRD350**	37…50
–	–	**30**	51.5	**–**	–	**GS●J**	22 x 58	80	**LC1D50A**	**LRD365**	48…65
–	–	**–**	–	**37**	53	**GS●J**	22 x 58	80	**LC1D65A**	**LRD365**	48…65
30	55	**37**	60	**–**	–	**GS●J**	22 x 58	80	**LC1D65A**	**LRD365**	48…65
–	–	**–**	–	**45**	64	**GS●J**	22 x 58	80	**LC1D80**	**LRD3361**	55…70
37 [3]	66	**45**	73	**–**	–	**GS●J**	22 x 58	100	**LC1D80**	**LRD3363**	63…80
45	80	**–**	–	**55**	78	**GS●J**	22 x 58	100	**LC1D95**	**LRD3365**	80…104
–	–	**55**	90	**–**	–	**GS●J**	22 x 58	125	**LC1D115**	**LRD4365**	80…104
55	97	**–**	–	**75**	106	**GS●J**	22 x 58	125	**LC1D115**	**LRD4367**	95…120

(1) For breaking under load, add a rotary switch-disconnector.
(2) For reversing operation, replace the prefix LC1 with LC2.
(3) 400 V maximum.

AC-3e category

Coordination: Fuses (NFC, DIN type aM) + Contactor + Overload relay

0.06 to 90 kW at 400/415, 440 and 500 V: type 2 coordination

Standard power ratings of 3-phase motors 50/60 Hz in category AC-3e						Switch-disconnector	aM fuses		Contactor	Thermal overload relay class 10	
400/415 V		440 V		500 V		Reference (1)	Size	Rating	Reference (2)	Reference	Setting range
P	Ie	P	Ie	P	Ie						
kW	A	kW	A	kW	A			A			A
0.06	0.2	**0.06**	0.19	**–**	–	**GS1DD**	10 x 38	2	**LC1D09**	**LRD02**	0.16…0.25
–	–	**0.09**	0.28	**–**	–	**GS1DD**	10 x 38	2	**LC1D09**	**LRD03**	0.25…0.4
0.09	0.3	**–**	–	**–**	–						
0.12	0.44	**0.12**	0.37	**–**	–	**GS1DD**	10 x 38	2	**LC1D09**	**LRD04**	0.4…0.63
0.18	0.6	**0.18**	0.55	**–**	–						
–	–	**0.25**	0.76	**–**	–	**GS1DD**	10 x 38	2	**LC1D09**	**LRD05**	0.63…1
0.25	0.85	**–**	–	**0.37**	0.88						
0.37	1.1	**0.37**	1	**0.55**	1.2						
0.55	1.5	**0.55**	1.36	**0.75**	1.5	**GS1DD**	10 x 38	2	**LC1D09**	**LRD06**	1…1.7
0.75	1.9	**0.75**	1.7	**–**	–						
–	–	**1.1**	2.5	**1.1**	2.2	**GS1DD**	10 x 38	4	**LC1D09**	**LRD07**	1.6…2.5
1.1	2.7	**–**	–	**1.5**	2.9						
1.5	3.6	**1.5**	3.3	**2.2**	3.9	**GS1DD**	10 x 38	4	**LC1D09**	**LRD08**	2.5…4
2.2	4.9	**2.2**	4.5	**3**	5.2	**GS1DD**	10 x 38	6	**LC1D09**	**LRD10**	4…6
3	6.5	**3**	5.9	**4**	6.8	**GS1DD**	10 x 38	8	**LC1D09**	**LRD12**	5.5…8
4	8.5	**4**	7.8	**5.5**	9.2	**GS1DD**	10 x 38	10	**LC1D09**	**LRD14**	7…10
5.5	11.5	**5.5**	10.5	**7.5**	12.4	**GS1DD**	10 x 38	16	**LC1D12**	**LRD16**	9…13
7.5	15.5	**7.5**	14.1	**9**	14.7	**GS1DD**	10 x 38	16	**LC1D18**	**LRD21**	12…18
–	–	**9**	16.7	**–**	–	**GS●F**	14 x 51	20	**LC1D25**	**LRD21**	12…18
9	18.4	**11**	20	**11**	17.6						
11	22	**–**	–	**15**	23	**GS●F**	14 x 51	25	**LC1D25**	**LRD22**	16…24
15	29	**15**	27	**18.5**	28	**GS●F**	14 x 51	32	**LC1D32**	**LRD32**	23…32
18.5	35	**18.5**	32	**22**	33	**GS●F**	14 x 51	40	**LC1D40A**	**LRD340**	30…40
22	41	**22**	39	**30**	44	**GS●J**	22 x 58	50	**LC1D50A**	**LRD350**	37…50
–	–	**30**	50	**–**	–	**GS●J**	22 x 58	80	**LC1D65A**	**LRD365**	48…65
–	–	**–**	–	**37**	53	**GS●J**	22 x 58	80	**LC1D65A**	**LRD365**	48…65
30	55	**37**	60	**–**	–	**GS●J**	22 x 58	80	**LC1D65A**	**LRD365**	48…65
–	–	**–**	–	**45**	64	**GS●J**	22 x 58	80	**LC1D95**	**LRD3361**	55…70
37	66	**45**	73	**–**	–	**GS●J**	22 x 58	100	**LC1D80**	**LRD3363**	63…80
45	80	**–**	–	**–**	–	**GS●J**	22 x 58	100	**LC1D95**	**LRD3365**	80...104
–	–	**–**	–	**55**	78	**GS●J**	22 x 58	100	**LC1D115**	**LR9D5367**	60...100
55	97	**55**	88.2	**75**	105.6	**GS●L**	T0	125	**LC1D150**	**LR9D5369**	90...150
75	132	**75**	125	**90**	128	**GS●L**	T0	160	**LC1D150**	**LR9D5369**	90...150

(1) GS●: GS1 for direct operator or GS2 for external operator.
(2) For reversing operation, replace the prefix LC1 with LC2.

Life Is On Schneider Electric

AC-3e category

Coordination: Fuses (NFC, DIN type aM) + Contactor + Overload relay

55 to 335 kW at 400/415 V: type 2 coordination

Standard power ratings of 3-phase motors 50/60 Hz in category AC-3e			Switch-disconnector	aM fuses		Contactor	Electronic thermal overload relay	
400/415 V			Product type	Size	Rating	Product type	Product type	Ir setting (1)
P	Ie	Iq (max)						
kW	A	kA			A			A
55	97	80	GS●L	0	125	LC1G115	LR9G115	97
75	132	80	GS●L	0	160	LC1G150	LR9G225	132
90	160	80	GS●N	1	200	LC1G185	LR9G225	160
110	195	80	GS●N	1	250	LC1G225	LR9G225	195
132	230	80	GS●QQ	2	315	LC1G265	LR9G500	230
160	280	80	GS●QQ	2	400	LC1G330	LR9G500	280
200	350	80	GS2S	3	500	LC1G400	LR9G500	350
220	380	80	GS2S	3	500	LC1G500	LR9G500	380
250	430	80	GS2S	3	500	LC1G500	LR9G500	430
315	540	80	GS2S	3	630	LC1G630	LR9G630	540
335	575	80	GS2V	4	800	LC1G630	LR9G630	575

75 to 355 kW at 440 V: type 2 coordination

Standard power ratings of 3-phase motors 50/60 Hz in category AC-3e			Switch-disconnector	aM fuses		Contactor	Electronic thermal overload relay	
440 V			Product type	Size	Rating	Product type	Product type	Ir setting (1)
P	Ie	Iq (max)						
kW	A	kA			A			A
75	115	80	GS●L	0	125	LC1G115	LR9G115	115
90	145	80	GS●L	0	160	LC1G150	LR9G225	145
110	177	80	GS●N	1	200	LC1G185	LR9G225	177
132	209	80	GS●N	1	250	LC1G225	LR9G225	209
160	255	80	GS●QQ	2	315	LC1G265	LR9G500	255
200	318	80	GS●QQ	2	400	LC1G330	LR9G500	318
220	343	80	GS2S	3	500	LC1G400	LR9G500	343
250	390	80	GS2S	3	500	LC1G500	LR9G500	390
315	490	80	GS2S	3	500	LC1G500	LR9G500	490
355	554	80	GS2S	3	630	LC1G630	LR9G630	554

65 to 375 kW at 500 V: type 2 coordination

Standard power ratings of 3-phase motors 50/60 Hz in category AC-3e			Switch-disconnector	aM fuses		Contactor	Electronic thermal overload relay	
500 V			Product type	Size	Rating	Product type	Product type	Ir setting (1)
P	Ie	Iq (max)						
kW	A	kA			A			A
65	92	80	GS●L	0	125	LC1G115	LR9G115	92
90	128	80	GS●L	0	160	LC1G150	LR9G225	128
110	156	80	GS●N	1	200	LC1G185	LR9G225	156
132	184	80	GS●N	1	250	LC1G225	LR9G225	184
160	224	80	GS●QQ	2	315	LC1G265	LR9G500	224
200	280	80	GS●QQ	2	400	LC1G330	LR9G500	280
250	344	80	GS2S	3	500	LC1G400	LR9G500	344
295	405	80	GS2S	3	500	LC1G500	LR9G500	405
375	516	80	GS2S	3	630	LC1G630	LR9G630	516

(1) This setting is a general guidance, Ir should be adjusted according to motor characteristics and conditions of use.

AC-3e category

Coordination: Fuses (NFC, DIN type aM) + Contactor + Overload relay

0.75 to 90 kW at 690 V: type 2 coordination

Standard power ratings of 3-phase motors 50/60 Hz in category AC-3e		Switch-disconnector	aM fuses		Contactor	Thermal overload relay class 10	
P	Ie	Reference (1)	Size	Rating	Reference (2)	Reference	Setting range
kW	A			A			A
0.75	1.1	**GS●F**	14 x 51	2	**LC1D09**	**LRD06**	1…1.6
1.1	1.6	**GS●F**	14 x 51	2	**LC1D09**	**LRD06**	1…1.6
1.5	2.2	**GS●F**	14 x 51	4	**LC1D09**	**LRD07**	1.6…2.5
2.2	2.9	**GS●F**	14 x 51	4	**LC1D09**	**LRD08**	2.5…4
3	4	**GS●F**	14 x 51	6	**LC1D09**	**LRD08**	2.5…4
4	5	**GS●F**	14 x 51	6	**LC1D09**	**LRD10**	4…6
5.5	7	**GS●F**	14 x 51	8	**LC1D09**	**LRD12**	5.5…8
7.5	9.3	**GS●F**	14 x 51	10	**LC1D25**	**LRD16**	9…13
11	13	**GS●F**	14 x 51	16	**LC1D25**	**LRD16**	9…13
15	16.5	**GS●F**	14 x 51	20	**LC1D25**	**LRD22**	16…24
18.5	21	**GS●F**	14 x 51	25	**LC1D32**	**LRD22**	16…24
22	25	**GS●J**	22 x 58	32	**LC1D40A**	**LRD332**	23…32
30	33	**GS●J**	22 x 58	40	**LC1D40A**	**LRD340**	30…40
37	40	**GS●J**	22 x 58	50	**LC1D65A**	**LRD350**	37…50
45	49	**GS●J**	22 x 58	63	**LC1D80**	**LRD3357**	37…50
55	57	**GS●J**	22 x 58	80	**LC1D115**	**LRD3359**	48…65
75	77	**GS●KK**	T00	100	**LC1D115**	**LRD3363**	63…80
90	93	**GS●KK**	T00	125	**LC1D150**	**LRD5369**	90...150

55 to 500 kW at 690 V: type 2 coordination

Standard power ratings of 3-phase motors 50/60 Hz in category AC-3e			Switch-disconnector	aM fuses		Contactor	Thermal overload relay	
690 V			Product type	Size	Rating	Product type	Product type	Ir setting (3)
P	Ie	Iq (max)						
kW	A	kA			A			A
55	57	80	**GS●J**	22 x 58	80	**LC1G115**	**LR9G225**	57
75	77	80	**GS●KK**	00	100	**LC1G115**	**LR9G225**	77
90	93	80	**GS●KK**	00	125	**LC1G150**	**LR9G225**	93
110	113	80	**GS●KK**	00	160	**LC1G185**	**LR9G225**	113
132	134	80	**GS●L**	0	160	**LC1G225**	**LR9G225**	134
160	162	80	**GS●N**	1	200	**LC1G225**	**LR9G225**	162
200	203	80	**GS●N**	1	250	**LC1G265**	**LR9G500**	203
220	223	80	**GS●QQ**	2	250	**LC1G330**	**LR9G500**	223
250	250	80	**GS●QQ**	2	315	**LC1G330**	**LR9G500**	250
315	313	80	**GS●QQ**	2	400	**LC1G400**	**LR9G500**	313
355	354	80	**GS●QQ**	3	500	**LC1G500**	**LR9G500**	354
500	493	80	**GS●S**	3	630	**LC1G630**	**LR9G630**	493

(1) GS●: GS1 for direct operator or GS2 for external operator.
(2) For reversing operation, replace the prefix LC1 with LC2.
(3) This setting is a general guidance, Ir should be adjusted according to motor characteristics and conditions of use.

Life Is On Schneider Electric

AC-3e category

Coordination: Fuses (NFC, DIN type aM) + Contactor + Electronic overload relay

0.18 to 55 kW at 400/415 and 690 V: type 2 coordination

Standard power ratings of 3-phase motors 50/60 Hz in category AC-3e						Switch-disconnector	aM fuses		Contactor	Electronic thermal overload relay	
400/415 V			690 V			Reference	Size	Rating	Reference	Reference	Setting range
P	Ie	Iq	P	Ie	Iq						
kW	A	kA	kW	A	kA			A			A
0.18	0.6	100	**–**	–	–	**GS1DD**	10 x 38	2	**LC1D09**	**LR9D02**	0.4…2.0
0.25	0.85	100	**–**	–	–	**GS1DD**	10 x 38	2	**LC1D09**	**LR9D02**	0.4…2.0
0.37	1.1	100	**–**	–	–	**GS1DD**	10 x 38	2	**LC1D09**	**LR9D02**	0.4…2.0
0.55	1.5	100	**–**	–	–	**GS1DD**	10 x 38	2	**LC1D09**	**LR9D02**	0.4…2.0
0.75	1.9	100	**–**	–	–	**GS1DD**	10 x 38	4	**LC1D09**	**LR9D02**	0.4…2.0
1.1	2.7	100	**–**	–	–	**GS1DD**	10 x 38	4	**LC1D18**	**LR9D08**	1.6…8.0
1.5	3.6	100	**–**	–	–	**GS1DD**	10 x 38	4	**LC1D18**	**LR9D08**	1.6…8.0
2.2	4.9	100	**–**	–	–	**GS1DD**	10 x 38	6	**LC1D18**	**LR9D08**	1.6…8.0
3	6.5	100	**–**	–	–	**GS1DD**	10 x 38	8	**LC1D18**	**LR9D32**	6.4…32
4	8.5	100	**–**	–	–	**GS1DD**	10 x 38	10	**LC1D18**	**LR9D32**	6.4…32
5.5	11.5	100	**–**	–	–	**GS1DD**	10 x 38	16	**LC1D25**	**LR9D32**	6.4…32
7.5	15.5	50	**–**	–	–	**GS1DD**	10 x 38	16	**LC1D25**	**LR9D32**	6.4…32
11	22	50	**–**	–	–	**GS●F**	14 x 51	25	**LC1D25**	**LR9D32**	6.4…32
15	29	50	**–**	–	–	**GS●J**	22 x 58	32	**LC1D65A**	**LR9D110S**	22…110
18.5	35	50	**–**	–	–	**GS●J**	22 x 58	40	**LC1D65A**	**LR9D110S**	22…110
22	41	50	**–**	–	–	**GS●J**	22 x 58	50	**LC1D65A**	**LR9D110S**	22…110
45 (1)	80	100	**–**	–	–	**GS●N**	T 1	100	**LC1D150**	**LR9D110S**	22…110
55 (1)	97	100	**–**	–	–	**GS●N**	T 1	125	**LC1D150**	**LR9D110S**	22…110
–	–	–	**0.37**	0.64	100	**GS●F**	14 x 51	2	**LC1D09**	**LR9D02**	0.4…2.0
–	–	–	**0.55**	0.87	100	**GS●F**	14 x 51	2	**LC1D09**	**LR9D02**	0.4…2.0
–	–	–	**0.75**	1.1	100	**GS●F**	14 x 51	2	**LC1D09**	**LR9D02**	0.4…2.0
–	–	–	**1.1**	1.6	100	**GS●F**	14 x 51	2	**LC1D25**	**LR9D08**	1.6…8.0
–	–	–	**1.5**	2.2	100	**GS●F**	14 x 51	4	**LC1D25**	**LR9D08**	1.6…8.0
–	–	–	**2.2**	2.9	100	**GS●F**	14 x 51	4	**LC1D25**	**LR9D08**	1.6…8.0
–	–	–	**3**	4	100	**GS●F**	14 x 51	6	**LC1D25**	**LR9D08**	1.6…8.0
–	–	–	**4**	5	100	**GS●F**	14 x 51	6	**LC1D25**	**LR9D08**	1.6…8.0
–	–	–	**5.5**	7	50	**GS●F**	14 x 51	8	**LC1D25**	**LR9D32**	6.4…32
–	–	–	**7.5**	9.3	50	**GS●F**	14 x 51	10	**LC1D25**	**LR9D32**	6.4…32
–	–	–	**11**	13	50	**GS●F**	14 x 51	16	**LC1D32**	**LR9D32**	6.4…32
–	–	–	**15**	16.5	50	**GS●F**	14 x 51	20	**LC1D32**	**LR9D32**	6.4…32
–	–	–	**18.5**	21	50	**GS●F**	14 x 51	25	**LC1D65A**	**LR9D32**	6.4…32
–	–	–	**22**	25	50	**GS●F**	14 x 51	32	**LC1D65A**	**LR9D32**	6.4…32
–	–	–	**30**	33	100	**GS●F**	14 x 51	40	**LC1D95**	**LR9D110S**	22…110
–	–	–	**37**	40	100	**GS●F**	14 x 51	50	**LC1D95**	**LR9D110S**	22…110
–	–	–	**45**	49	100	**GS●J**	22 x 58	63	**LC1D95**	**LR9D110S**	22…110

(1) Ratings valid up to 400 V AC only.

AC-3e category

Coordination: Fuses (BS) + Contactor + Overload relay

0.06 to 80 kW at 400/415, 440 and 500 V: type 2 coordination

Standard power ratings of 3-phase motors 50/60 Hz in category AC-3e						Switch-disconnector-fuse	BS fuses		Contactor	Thermal overload relay	
400/415 V		440 V		500 V		Reference	Size	Rating	Reference [1]	Reference	Setting range
P	Ie	P	Ie	P	Ie						
kW	A	kW	A	kW	kA			A			A
0.06	0.22	**0.06**	0.19	**–**	–	**GS1DDB**	A1	NIT 2	**LC1D09**	**LRD02**	0.16…0.25
–	–	**0.09**	0.28	**–**	–	**GS1DDB**	A1	NIT 2	**LC1D09**	**LRD03**	0.25…0.4
0.09	0.36	**–**	–	**–**	–						
0.12	0.44	**0.12**	0.37	**–**	–	**GS1DDB**	A1	NIT 2	**LC1D09**	**LRD04**	0.4…0.63
0.18	0.6	**0.18**	0.55	**–**	–	**GS1DDB**	A1	NIT 2	**LC1D09**	**LRD05**	0.63…1
–	–	**0.25**	0.76	**–**	–	**GS1DDB**	A1	NIT 4	**LC1D09**	**LRD05**	0.63…1
0.25	0.85	**0.37**	1	**0.37**	0.88						
0.37	1.1	**0.55**	1.36	**0.55**	1.2						
0.55	1.5	**0.75**	1.7	**0.75**	1.5	**GS1DDB**	A1	NIT 6	**LC1D09**	**LRD06**	1…1.7
0.75	1.9	**–**	–	**–**	–	**GS1DDB**	A1	NIT 10	**LC1D09**	**LRD07**	1.6…2.5
–	–	**–**	–	**1.5**	2.9	**GS1DDB**	A1	NIT 10	**LC1D09**	**LRD08**	2.5…4
1.5	3.6	**1.5**	3.3	**2.2**	3.9	**GS1DDB**	A1	NIT 16	**LC1D09**	**LRD08**	2.5…4
2.2	4.9	**2.2**	4.5	**3**	5.2	**GS1DDB**	A1	NIT 16	**LC1D09**	**LRD10**	4…6
3	6.5	**3**	5.9	**4**	6.8	**GS1DDB**	A1	NIT 20	**LC1D09**	**LRD12**	5.5…8
4	8.5	**4**	7.8	**5.5**	9.2	**GS1DDB**	A1	NIT 20	**LC1D09**	**LRD14**	7…10
5.5	11.5	**5.5**	10.5	**7.5**	12.4	**GS1DDB**	A1	NIT 20M25	**LC1D12**	**LRD16**	9…13
7.5	15.5	**7.5**	14.1	**9**	14.7	**GS1DDB**	A1	NIT 20M32	**LC1D18**	**LRD21**	12…18
9	18.4	**9**	16.7	**–**	–	**GS2GB**	A2	TIA 32M35	**LC1D18**	**LRD21**	12…18
11	22	**11**	20	**11**	17.6						
–	–	**–**	–	**15**	23	**GS2GB**	A2	TIA 32M50	**LC1D25**	**LRD22**	16…24
15	29	**15**	27	**–**	–	**GS2GB**	A2	TIA 32M63	**LC1D32**	**LRD32**	23…32
18.5	35	**18.5**	32	**–**	–	**GS2GB**	A3	TIS 63M80	**LC1D40A**	**LRD340**	25…40
22	41	**22**	39	**–**	–	**GS2GB**	A3	TIS 63M80	**LC1D50A**	**LRD350**	37…50
30	55	**30**	50	**–**	–	**GS2GB**	A3	TIS 63M100	**LC1D65A**	**LRD365**	48…65
–	–	**37**	60	**–**	–	**GS2GB**	A3	TIS 63M100	**LC1D65A**	**LRD365**	48…65
–	–	**45**	73	**45**	64	**GS2LLB**	A4	TCP 100M125	**LC1D80**	**LRD3363**	63…80
45	80	**–**	–	**55**	78	**GS2LLB**	A4	TCP 100M125	**LC1D95**	**LRD3365**	80…104
55	97	**–**	–	**–**	–	**GS2LLB**	A4	TCP 100M160	**LC1D115**	**LR9D5369**	90…150
–	–	**55**	90	**–**	–	**GS2LLB**	A4	TCP 100M160	**LC1D115**	**LR9D5367**	60…100
–	–	**–**	–	**80**	113	**GS2LB**	B2	TF 200	**LC1D150**	**LR9D5369**	90…150
80	141.3	**80**	128.4	**–**	–	**GS2LB**	B2	TF 200M250	**LC1D150**	**LR9D5369**	90…150

(1) For reversing operation, replace the prefix LC1 with LC2.

Life Is On Schneider Electric

AC-3e category

Coordination: Thermal magnetic circuit breaker + Contactor

0.06 to 335 kW at 400/415, 440 and 500 V: type 1 coordination

Standard power ratings of 3-phase motors 50/60 Hz in category AC-3e									Circuit breaker		Contactor
400/415 V			440 V			500 V			Reference *References in italics are available in CEE zone only*	Setting range of thermal trips	Reference [2]
P	Ie	Iq [1]	P	Ie	Iq [1]	P	Ie	Iq [1]			
kW	A	kA	kW	A	kA	kW	A	kA		A	
0.06	0.2	50	**0.06**	0.19	50	–	–	–	**GV2ME02** *GV2ME02AP*	0.16…0.25	**LC1K06** or **LC1D09**
0.09	0.3	50	**0.09** –	0.28 –	50 –	–	–	–	**GV2ME03** *GV2ME03AP*	0.25…0.40	**LC1K06** or **LC1D09**
0.12 –	0.44 –	50 –	**0.12** **0.18**	0.37 0.55	50 50	– –	– –	– –	**GV2ME04** *GV2ME04AP*	0.40…0.63	**LC1K06** or **LC1D09**
0.18 **0.25**	0.6 0.85	50 50	**0.25** –	0.76 –	50 –				**GV2ME05** *GV2ME05AP*	0.63…1	**LC1K06** or **LC1D09**
0.37 **0.55**	1.1 1.5	50 50	**0.37** **0.55**	1 1.36	50 50	**0.37** **0.55**	0.88 1.2	50 50	**GV2ME06** *GV2ME06AP*	1…1.6	**LC1K06** or **LC1D09**
–	–	–	–	–	–	**0.75**	1.5	50	**GV2ME06** *GV2ME06AP*	1…1.6	**LC1K06** or **LC1D09**
0.75 –	1.9 –	50 –	**0.75** –	1.7 –	50 –	– **1.1**	– 2.2	– 50	**GV2ME07** *GV2ME07AP*	1.6….2.5	**LC1K06** or **LC1D09**
1.1 **1.5**	2.7 3.6	50 50	**1.1** **1.5**	2.5 3.3	50 50	**1.5** **2.2**	2.9 3.9	50 50	**GV2ME08** *GV2ME08AP*	2.5…4	**LC1K06** or **LC1D09**
2.2 –	4.9 –	50 –	**2.2** –	4.5 –	50 –	– **3**	– 5.2	– 50	**GV2ME10** *GV2ME10AP*	4…6.3	**LC1K06** or **LC1D09**
–	–	–	**3**	5.9	50	**–**	–	–	**GV2ME14** *GV2ME14AP*	6…10	**LC1K06** or **LC1D09**
3 **4**	6.5 8.5	50 50	– **4**	– 7.8	– 15	**4** **5.5**	6.8 9.2	10 10	**GV2ME14** *GV2ME14AP*	6…10	**LC1K09** or **LC1D09**
5.5	11.5	15	**5.5**	10.5	8	**7.5**	12.4	6	**GV2ME16** *GV2ME16AP*	9…14	**LC1K12** or **LC1D12**
7.5 –	15.5 –	15 –	**7.5** **9**	13.7 14.1	8 8	**9** –	13.9 –	6 –	**GV2ME20** *GV2ME20AP*	13…18	**LC1D18**
9	18.1	15	**11**	20	6	**11**	17.6	4	**GV2ME21** *GV2ME21AP*	17…23	**LC1D25**
11	22	15	–	–	–	**15**	23	4	**GV2ME22** *GV2ME22AP*	20…25	**LC1D25**
15	29	10	**15**	27	6	**18.5**	28	4	**GV2ME32** *GV2ME32AP*	24…32	**LC1D32**
18.5	35	50	**18.5**	32	50	**22**	33	10	**GV3P40**	30…40	**LC1D40A**
22	41	50	**22**	39	50	**30**	44	10	**GV3P50**	37…50	**LC1D50A**
30	55	50	**30**	50	50	**37**	53	10	**GV3P65**	48…65	**LC1D65A**
37	66	50	–	–	–	–	–	–	**GV3P73**	62...73	**LC1D80A**
–	–	–	**37**	60	70	**45**	64	30	**GV4P80**	40…80	**LC1D65A**
37	66	100	**45**	73	70	**55**	78	30	**GV4P80**	40…80	**LC1D80**
45	80	100	–	–	–	–	–	–	**GV4P115**	65...115	**LC1D95**
55	97	100	**55**	90	70	**75**	106	30	**GV4P115**	65...115	**LC1D115**
–	–	–	**75**	125	35	**90**	128	30	**GV5P150F**	70...150	**LC1D150**
75	132	36	**–**	–	–	–	–	–	**GV5P220**	100...220	**LC1D150**
–	–	–	**90**	146	35	**–**	–	–	[3]	–	[3]
90	160	36	–	–	–	**110**	156	30	[3]	–	[3]
110	195	36	–	–	–	–	–	–	[3]	–	[3]
160	280	36	**318**	280	35	–	–	–	[3]	–	[3]
–	–	–	–	–	–	**220**	308	30	[3]	–	[3]
200	350	36	**220**	318	35	–	–	–	[3]	–	[3]
250	430	36	**250**	401	35	**335**	460	30	[3]	–	[3]

*(1) The breaking performance of circuit breakers **GV2ME** can be increased by adding a current limiter **GV1L3**.*
(2) For reversing operation, replace the prefix LC1 with LC2.
(3) Please consult your regional sales office.

AC-3e category

Coordination: Thermal magnetic circuit breaker + Contactor

0.06 to 90 kW at 400/415, 440 and 500 V: type 2 coordination

Standard power ratings of 3-phase motors 50/60 Hz in category AC-3e									Circuit breaker		Contactor
400/415 V			440 V			500 V			Reference *References in italics are available in CEE zone only*	Setting range of thermal trips	Reference (2)
P	Ie	Iq (1)	P	Ie	Iq (1)	P	Ie	Iq (1)			
kW	A	kA	kW	A	kA	kW	A	kA		A	
0.06	0.2	130	**0.06**	0.19	130	–	–	–	**GV2P02** or **GV2ME02** or *GV2ME02AP*	0.16…0.25	**LC1D09**
0.09	0.3	130	**0.09** –	0.28 –	130 –	– –	– –	– –	**GV2P03** or **GV2ME03** or *GV2ME03AP*	0.25…0.4	**LC1D09**
0.12 –	0.44 –	130 –	**0.12** **0.18**	0.37 0.55	130 130	– –	– –	– –	**GV2P04** or **GV2ME04** or *GV2ME04AP*	0.4…0.63	**LC1D09**
0.18 **0.25**	0.6 0.85	130 130	– **0.25**	– 0.76	– 130	– –	– –	– –	**GV2P05** or **GV2ME05** or *GV2ME05AP*	0.63…1	**LC1D09**
0.37 **0.55**	1.1 1.5	130 130	**0.37** **0.55**	0.99 1.36	130 130	**0.37** **0.55**	0.88 1.2	130 130	**GV2P06** or **GV2ME06** or *GV2ME06AP*	1…1.6	**LC1D09**
–	–	–	–	–	–	**0.75**	1.5	130	**GV2P06** or **GV2ME06** or *GV2ME06AP*	1…1.6	**LC1D09**
0.75	1.9	130	**0.75**	1.68	130	**1.1**	2.2	130	**GV2P07** or **GV2ME07** or *GV2ME07AP*	1.6…2.5	**LC1D09**
1.1 **1.5**	2.7 3.6	130 130	**1.1** **1.5**	2.5 3.3	130 130	**1.5** **2.2**	2.9 3.9	130 130	**GV2P08** or **GV2ME08** or *GV2ME08AP*	2.5…4	**LC1D09**
2.2	4.9	130	–	–	–	–	–	–	**GV2P10** or **GV2ME10** or *GV2ME10AP*	4…6.3	**LC1D09**
–	–	–	**2.2**	4.5	50	**3**	5.2	50	**GV2ME10** or *GV2ME10AP*	4…6.3	**LC1D09**
– –	– –	– –	**2.2** –	4.5 –	130 –	– **3**	– 5.2	– 130	**GV2P10**	4…6.3	**LC1D09**
3 **4**	6.5 8.5	130 130	**3** –	5.9 –	130 or 50 –	– –	– –	– –	**GV2P14** or **GV2ME14** or *GV2ME14AP*	6…10	**LC1D09**
– –	– –	– –	**4** –	7.8 –	15 –	**4** **5.5**	6.8 9.2	10 10	**GV2ME14** or *GV2ME14AP*	6…10	**LC1D09**
– –	– –	– –	– **4**	– 7.8	– 130	**4** **5.5**	6.8 9.2	50 50	**GV2P14**	6…10	**LC1D12**
5.5 –	11.5 –	130 –	**5.5** **7.5**	10.5 14.1	50 or 8 50 or 8	**7.5** **9**	12.4 13.9	42 or 6 42 or 6	**GV2P16** or **GV2ME16** or *GV2ME16AP*	9…14	**LC1D25**
7.5	15.5	50 or 15	**9**	16.9	20 or 8	–	–	–	**GV2P20** or **GV2ME20** or *GV2ME20AP*	13…18	**LC1D25**
9	18.1	50 or 15	**11**	20	20 or 6	**11**	17.6	10 or 6	**GV2P21** or **GV2ME21** or *GV2ME21AP*	17…23	**LC1D25**
11	22	50 or 15	–	–	–	–	–	–	**GV2P22** or **GV2ME22** or *GV2ME22AP*	20…25	**LC1D25**
–	–	–	–	–	–	**15**	23	10 or 6	**GV2P22**	20…25	**LC1D32**
15	29	50 or 10	**15**	27	20 or 6	**18.5**	28	10 or 4	**GV2P32** or **GV2ME32** or *GV2ME32AP*	24…32	**LC1D32**
18.5	35	50	–	–	–	–	–	–	**GV3P40**	30…40	**LC1D50A**
–	–	–	**18.5**	32	50	**22**	33	10	**GV3P40**	30…40	**LC1D65A**
22	41	50	–	–	–	–	–	–	**GV3P50**	37…50	**LC1D50A**
–	–	–	**22**	39	50	**30**	44	10	**GV3P50**	37…50	**LC1D65A**
30	55	50	**30**	50	50	–	–	–	**GV3P65**	48…65	**LC1D65A**
–	–	–	–	–	–	**37**	53	10	**GV3P65**	48…65	**LC1D65A**
37	66	50	–	–	–	–	–	–	**GV3P73**	62...73	**LC1D80A**
–	–	–	**37**	60	70	–	–	–	**GV4P80**	40…80	**LC1D65A**
37	66	100	**45**	73	70	(3)	(3)	(3)	**GV4P80**	40…80	**LC1D65A**
45 **55**	80 97	100 100	**55** –	90 –	70 –	(3) (3)	(3) (3)	(3) (3)	**GV4P115**	65 …115	**LC1D115**
–	–	–	**75**	125	65	–	–	–	**GV5P150H**	70...150	**LC1D150**
75 **–**	132 –	70 –	**–** **90**	– 146	– 65	– –	– –	– –	**GV5P220**	100...220	**LC1D150**

*(1) The breaking performance of circuit breakers **GV2P** can be increased by adding a current limiter **GV1L3**.*
*(2) Combinations with circuit breaker **GV2ME** are type 2 coordinated only at 400/415 V and 440 V.*
(3) Please consult your regional sales office.

Life Is On Schneider Electric

AC-3e category

Coordination: Thermal magnetic circuit breaker + Contactor

45 to 220 kW at 400/415 V: type 2 coordination (with TeSys GV4 / GV5 / GV6 circuit breakers)

Standard power ratings of 3-phase motors 50/60 Hz in category AC-3e			Circuit breaker			Contactor
400/415 V			Product type [1]	Ir setting [2]	Irm [2]	Product type
P	Ie	Iq (max)				
kW	A	kA		A	A	
45	80	100	**GV4P/GV4PE/GV4PEM115●**	86	774	**LC1G115**
55	97	100	**GV4P/GV4PE/GV4PEM115●**	100	900	**LC1G115**
55	97	70	**GV5P150●**	100	1300	**LC1G115**
75	132	70	**GV5P220●**	140	1820	**LC1G150**
90	160	70	**GV5P220●**	170	2210	**LC1G185**
110	195	70	**GV6P320●**	200	2600	**LC1G225**
110	195	70	**GV6P320●**	200	2600	**LC1G265**
132	230	70	**GV6P320●**	240	3120	**LC1G265**
160	280	70	**GV6P500●**	300	3900	**LC1G330**
200	350	70	**GV6P500●**	380	4940	**LC1G400**
220	380	70	**GV6P500●**	400	5720	**LC1G500**

(1) Product type to be completed by replacing the ● with the breaking performance code:

Rated conditional short-circuit (kA)	GV4P/GV4PE/GV4PEM115●			GV5P150●/ 220● GV6P320●/ 500●	
Breaking performance code	**B**	**N**	**S**	**F**	**H**
400/415 V	25	50	100	36	70

Coordination and standards

45 to 400 kW at 400/415 V: type 2 coordination (with ComPact NSX / NS circuit breakers)

Standard power ratings of 3-phase motors 50/60 Hz in category AC-3e			Circuit breaker			Contactor
400/415 V			Product type [1]	Ir setting [2]	Irm [2]	Product type
P	Ie	Iq (max)				
kW	A	kA		A	A	
45	80	130	**NSX100● + MicroLogic 2.2 M**	85	1105	**LC1G115**
55	97	130	**NSX160● + MicroLogic 2.2 M** [3]	100	1300	**LC1G115**
75	132	130	**NSX250● + MicroLogic 2.2 M** [3]	140	1820	**LC1G150**
90	160	130	**NSX250● + MicroLogic 2.2 M** [3]	170	2210	**LC1G185**
110	195	130	**NSX400● + MicroLogic 2.3 M** [3]	200	2600	**LC1G225**
132	230	130	**NSX400● + MicroLogic 2.3 M** [3]	240	3120	**LC1G265**
160	280	130	**NSX630● + MicroLogic 2.3 M** [3]	300	3900	**LC1G330**
200	350	130	**NSX630● + MicroLogic 2.3 M** [3]	380	4940	**LC1G400**
220	380	130	**NS800● + MicroLogic 5.0**	400	5200	**LC1G500**
250	430	130	**NS800● + MicroLogic 5.0**	440	5720	**LC1G500**
300	500	130	**NS800● + MicroLogic 5.0**	560	5040	**LC1G630**
335	575	130	**NS800● + MicroLogic 5.0**	640	5760	**LC1G630**
355	610	130	**NS800● + MicroLogic 5.0**	640	5760	**LC1G800**
400	690	130	**NS800● + MicroLogic 5.0**	720	6480	**LC1G800**

(1) Product type to be completed by replacing the ● with the breaking performance code:

Rated conditional short-circuit (kA)	NSX100●/ NSX160● / NSX250●/ NSX400●/ NSX630●					NS800●/ NS1000●
Breaking performance code	**F**	**N**	**H**	**S**	**L**	**L**
400/415 V	36	50	70	100	130	150

(2) This setting is a general guidance, Ir and Irm should be adjusted according to motor characteristics and conditions of use.
(3) Applicable also with MicroLogic 6.2 E-M and 6.3 E-M trip units.

AC-3e category

Coordination: Thermal magnetic circuit breaker + Contactor

55 to 250 kW at 440 V: type 2 coordination (with TeSys GV4/GV5/GV6 circuit breakers)

Standard power ratings of 3-phase motors 50/60 Hz in category AC-3e			Circuit breaker			Contactor
440 V			Product type [1]	Ir setting [2]	Irm [2]	Product type
P	Ie	Iq (max)				
kW	A	kA		A	A	
55	88	100	**GV4P/GV4PE/GV4PEM115●**	93	837	**LC1G115**
55	88	70	**GV5P150●**	90	1170	**LC1G115**
75	120	70	**GV5P150●**	130	1690	**LC1G150**
90	145	70	**GV5P220●**	150	1950	**LC1G150**
110	177	70	**GV5P220●**	185	2405	**LC1G185**
132	209	70	**GV6P320●**	210	2730	**LC1G225**
160	255	70	**GV6P320●**	260	3380	**LC1G265**
200	318	70	**GV6P500●**	320	4160	**LC1G330**
220	343	70	**GV6P500●**	350	4550	**LC1G400**
250	390	65	**GV6P500●**	400	5200	**LC1G400**

(1) Product type to be completed by replacing the ● with the breaking performance code:

Rated conditional short-circuit (kA)	GV4P/GV4PE/GV4PEM115●			GV5P150●/ 220●		GV6P320●/ 500●	
Breaking performance code	**B**	**N**	**S**	**F**	**H**	**F**	**H**
440 V	20	50	70	35	65	30	65

Coordination and standards

55 to 450 kW at 440 V: type 2 coordination (with ComPact NSX/NS circuit breakers)

Standard power ratings of 3-phase motors 50/60 Hz in category AC-3e			Circuit breaker			Contactor
440 V			Product type [1]	Ir setting [2]	Irm [2]	Product type
P	Ie	Iq (max)				
kW	A	kA		A	A	
55	88	130	**NSX100● + MicroLogic 2.2 M**	90	1170	**LC1G115**
75	120	130	**NSX160● + MicroLogic 2.2 M** [3]	130	1690	**LC1G150**
90	145	130	**NSX250● + MicroLogic 2.2 M** [3]	150	1950	**LC1G150**
110	177	130	**NSX250● + MicroLogic 2.2 M** [3]	185	2405	**LC1G185**
132	209	130	**NSX400● + MicroLogic 2.3 M** [3]	210	2730	**LC1G225**
160	255	130	**NSX400● + MicroLogic 2.3 M** [3]	260	3380	**LC1G265**
200	318	130	**NSX630● + MicroLogic 2.3 M** [3]	320	4160	**LC1G330**
220	343	130	**NSX630● + MicroLogic 2.3 M** [3]	350	4550	**LC1G400**
250	390	130	**NSX630● + MicroLogic 2.3 M** [3]	400	5200	**LC1G400**
300	466	130	**NS800● + MicroLogic 5.0**	470	6110	**LC1G500**
335	521	130	**NS800● + MicroLogic 5.0**	560	5040	**LC1G630**
355	554	130	**NS800● + MicroLogic 5.0**	560	5040	**LC1G630**
400	627	130	**NS800● + MicroLogic 5.0**	640	5760	**LC1G800**
450	695	130	**NS800● + MicroLogic 5.0**	720	6480	**LC1G800**

(1) Product type to be completed by replacing the ● with the breaking performance code:

Rated conditional short-circuit (kA)	NSX100●/ NSX160●/ NSX250●					NSX400●/ NSX630●					NS800●
Breaking performance code	**F**	**N**	**H**	**S**	**L**	**F**	**N**	**H**	**S**	**L**	**L**
440 V	35	50	65	90	130	30	42	65	90	130	130

(2) This setting is a general guidance, Ir and Irm should be adjusted according to motor characteristics and conditions of use.
(3) Applicable also with MicroLogic 6.2 E-M and 6.3 E-M trip units.

https://www.se.com/ww/en/product/

Life Is On Schneider Electric

AC-3e category

Coordination: Thermal magnetic circuit breaker + Contactor

65 to 295 kW at 500 V: type 2 coordination (with TeSys GV4 / GV5 / GV6 circuit breakers)

Standard power ratings of 3-phase motors 50/60 Hz in category AC-3e			Circuit breaker			Contactor
500 V			Product type [1]	Ir setting [2]	Irm [2]	Product type
P	Ie	Iq (max)				
kW	A	kA		A	A	
65	92	100	**GV4P/GV4PE/GV4PEM115●**	93	837	**LC1G115**
65	92	50	**GV5P150●**	100	1300	**LC1G115**
110	156	50	**GV5P220●**	170	2210	**LC1G185**
132	184	50	**GV5P220●**	185	2405	**LC1G225**
160	224	50	**GV6P320●**	240	3120	**LC1G265**
200	280	50	**GV6P500●**	300	3900	**LC1G330**
250	344	50	**GV6P500●**	350	4550	**LC1G400**
295	405	50	**GV6P500●**	440	5720	**LC1G500**

(1) Product type to be completed by replacing the ● with the breaking performance code:

Rated conditional short-circuit (kA)	GV4P/GV4PE/GV4PEM115●			GV5P150●/ 220●		GV6P320●/ 500●	
Breaking performance code	**B**	**N**	**S**	**F**	**H**	**F**	**H**
500 V	10	25	30	30	50	25	50

65 to 425 kW at 500 V: type 2 coordination (with ComPacT NSX / NS circuit breakers)

Standard power ratings of 3-phase motors 50/60 Hz in category AC-3e			Circuit breaker			Contactor
500 V			Product type [1]	Ir setting [2]	Irm [2]	Product type
P	Ie	Iq (max)				
kW	A	kA		A	A	
65	92	100	**NSX100● + MicroLogic 2.2 M**	95	1235	**LC1G115**
65	92	100	**NSX160● + MicroLogic 2.2 M [3]**	95	1235	**LC1G115**
90	128	70	**NSX160● + MicroLogic 2.2 M [3]**	130	1690	**LC1G150**
110	156	100	**NSX250● + MicroLogic 2.2 M [3]**	170	2210	**LC1G185**
132	184	100	**NSX250● + MicroLogic 2.2 M [3]**	185	2405	**LC1G225**
160	224	70	**NSX400● + MicroLogic 2.3 M [3]**	240	3120	**LC1G265**
200	280	70	**NSX630● + MicroLogic 2.3 M [3]**	300	3900	**LC1G330**
250	344	70	**NSX630● + MicroLogic 2.3 M [3]**	350	4550	**LC1G400**
295	405	70	**NSX630● + MicroLogic 2.3 M [3]**	440	5720	**LC1G500**
375	516	70	**NS800● + MicroLogic 5.0**	560	5040	**LC1G630**
425	584	70	**NS800● + MicroLogic 5.0**	640	5760	**LC1G800**

(1) Product type to be completed by replacing the ● with the breaking performance code:

Rated conditional short-circuit (kA)	NSX100●					NSX160●/ NSX250●					NSX400●/ NSX630●					NS800●
Breaking performance code	**F**	**N**	**H**	**S**	**L**	**F**	**N**	**H**	**S**	**L**	**F**	**N**	**H**	**S**	**L**	**L**
500 V	25	36	50	65	70	30	36	50	65	70	25	30	50	65	70	100

(2) This setting is a general guidance, Ir and Irm should be adjusted according to motor characteristics and conditions of use.
(3) Applicable also with MicroLogic 6.2 E-M and 6.3 E-M trip units.

AC-3e category

Coordination: Thermal magnetic circuit breaker + Contactor

0.06 to 22 kW at 690 V: type 2 coordination

Standard power ratings of 3-phase motors 50/60 Hz in category AC-3e			Limiter block	Circuit breaker			Contactor
690 V			Product type	Product type	Ir Setting (1)	Irm (1)	Product type
P	Ie	Iq					
kW	A	kA			A	A	
0.06	0.12	100		**GV2P01**	0.16	1.5	**LC1D09**
0.09	0.17	100		**GV2P02**	0.25	2.4	**LC1D09**
0.12	0.23	100		**GV2P03**	0.4	2.5	**LC1D09**
0.18	0.35	100		**GV2P03**	0.4	5	**LC1D09**
0.25	0.49	100		**GV2P04**	0.63	8	**LC1D09**
0.37	0.64	100		**GV2P05**	1	13	**LC1D09**
0.55	0.87	100		**GV2P05**	1	13	**LC1D09**
0.75	1.1	100		**GV2P06**	1.6	22.5	**LC1D09**
1.1	1.6	100	**LA9LB920**	**GV2P07**	1.6	22.5	**LC1D25**
1.5	2.2	100	**LA9LB920**	**GV2P07**	2.5	33.5	**LC1D25**
2.2	2.9	50	**LA9LB920**	**GV2P08**	4	51	**LC1D25**
3	4	50	**LA9LB920**	**GV2P08**	4	51	**LC1D25**
4	5	50	**LA9LB920**	**GV2P10**	6.3	78	**LC1D25**
5.5	7	50	**LA9LB920**	**GV2P14**	10	138	**LC1D25**
7.5	9.3	50	**LA9LB920**	**GV2P16**	14	170	**LC1D25**
9	12.8	50	**LA9LB920**	**GV2P16**	14	170	**LC1D25**
11	13	50	**LA9LB920**	**GV2P16**	14	170	**LC1D25**
15	16.5	50	**LA9LB920**	**GV2P20**	18	223	**LC1D25**
18.5	21	50	**LA9LB920**	**GV2P21**	23	327	**LC1D32**
22	25	50	**LA9LB920**	**GV2P32**	32	416	**LC1D40A**

(1) This setting is a general guidance, Ir and Irm should be adjusted according to motor characteristics and conditions of use.

30 to 560 kW at 690 V: type 2 coordination (with ComPacT NSX / NS circuit breakers)

Standard power ratings of 3-phase motors 50/60 Hz in category AC-3e			Circuit breaker			Contactor
690 V			Product type (1)	Ir Setting (2)	Irm (2)	Product type
P	Ie	Iq (max)				
kW	A	kA		A	A	
30	32	100	**NSX100● + MicroLogic 2.2 M**	36	468	**LC1G115**
37	39	100	**NSX100● + MicroLogic 2.2 M**	40	520	**LC1G115**
45	47	100	**NSX100● + MicroLogic 2.2 M**	50	650	**LC1G115**
55	57	100	**NSX100● + MicroLogic 2.2 M**	60	780	**LC1G115**
75	77	100	**NSX100● + MicroLogic 2.2 M**	80	1040	**LC1G115**
90	93	100	**NSX250● + MicroLogic 2.2 M (3)**	95	1235	**LC1G150**
110	113	100	**NSX250● + MicroLogic 2.2 M (3)**	115	1495	**LC1G185**
132	134	100	**NSX250● + MicroLogic 2.2 M (3)**	140	1820	**LC1G225**
160	162	100	**NSX250● + MicroLogic 2.2 M (3)**	170	2210	**LC1G225**
200	203	100	**NSX400● + MicroLogic 2.3 M (3)**	210	2730	**LC1G265**
220	223	100	**NSX400● + MicroLogic 2.3 M (3)**	240	3120	**LC1G330**
250	250	100	**NSX400● + MicroLogic 2.3 M (3)**	260	3380	**LC1G400**
315	313	100	**NSX630● + MicroLogic 2.3 M (3)**	320	4160	**LC1G400**
335	335	100	**NSX630● + MicroLogic 2.3 M (3)**	350	4550	**LC1G500**
355	354	100	**NSX630● + MicroLogic 2.3 M (3)**	380	4940	**LC1G500**
375	372	100	**NSX630● + MicroLogic 2.3 M (3)**	380	4940	**LC1G630**
400	400	100	**NS800● + MicroLogic 5.0**	440	5720	**LC1G630**
450	455	100	**NS800● + MicroLogic 5.0**	470	6110	**LC1G630**
475	475	100	**NS800● + MicroLogic 5.0**	500	6500	**LC1G630**
500	493	100	**NS800● + MicroLogic 5.0**	500	6500	**LC1G630**
560	551	75	**NS800● + MicroLogic 5.0**	560	7280	**LC1G800**

(1) Product type to be completed by replacing the ● with the breaking performance code:

Rated conditional short-circuit (kA)	NSX100●/ NSX250●/ NSX400●/ NSX630●		NS800●
Breaking performance code	**HB1**	**HB2**	**LB**
690 V	75	100	75

(2) This setting is a general guidance, Ir and Irm should be adjusted according to motor characteristics and conditions of use.
(3) Applicable also with MicroLogic 6.2 E-M and 6.3 E-M trip units.

Life Is On Schneider Electric

Coordination (UL): Thermal magnetic circuit breaker + Contactor

½ to 80 hp at 460 V - 3P

GV2P + contactor: compact, high SCCR solution.
GV3P + contactor: medium power, Everlink (long lasting power connection).
GV4PB + contactor: high power, advanced protection settings, Everlink (long lasting power connection), 18 (GV4PB●●●B), 35 (GV4PB●●●N) or 65 (GV4PB●●●S) kA SCCR.

Standard power ratings						Circuit breaker		Contactor		Circuit breaker		Contactor		Circuit breaker		Contactor	
200 V 3P		230 V 3P		460 V 3P		Product reference (2)	Dial range	Product reference (3)	Comb. SCCR 480Y	Product reference (4)	Dial range	Product reference (3)	Comb. SCCR 480Y	Product reference	Dial range	Product reference (3)	SCCR 480Y As applied
HP	FLA (1)	HP	FLA (1)	HP	FLA (1)		A		kA		A		kA		A		kA
				½	1.1	**GV2P06**	1 to 1.6	**LC1D09**	100					**GV4PB02S**	0.8 to 2	**LC1D09**	65
				¾	1.6	**GV2P06**	1 to 1.6	**LC1D09**	100					**GV4PB02S**	0.8 to 2	**LC1D09**	65
½	2.5	½	2.2	1	2.1	**GV2P07**	1.6 to 2.5	**LC1D09**	100					**GV4PB03S**	1.4 to 3.5	**LC1D09**	65
				1½	3	**GV2P08**	2.5 to 4	**LC1D09**	100					**GV4PB03S**	1.4 to 3.5	**LC1D09**	65
¾	3.7	¾	3.2	2	3.4	**GV2P08**	2.5 to 4	**LC1D09**	100					**GV4PB07S**	2.9 to 7	**LC1D09**	65
1	4.6	1	4.2	3	4.8	**GV2P10**	4 to 6.3	**LC1D09**	100					**GV4PB07S**	2.9 to 7	**LC1D09**	65
		1½	6			**GV2P10**	4 to 6.3	**LC1D09**	100					**GV4PB12S**	5 to 12.5	**LC1D12**	65
1½	6.9	2	6.8			**GV2P14**	6 to 10	**LC1D12**	100					**GV4PB12S**	5 to 12.5	**LC1D12**	65
2	7.8			5	7.6	**GV2P14**	6 to 10	**LC1D12**	100					**GV4PB12S**	5 to 12.5	**LC1D12**	65
		3	9.6			**GV2P14**	6 to 10	**LC1D12**	100	**GV3P13**	9 to 13	**LC1D18**	65	**GV4PB12S**	5 to 12.5	**LC1D12**	65
3	11			7½	11	**GV2P16**	9 to 14	**LC1D18**	50 (5)	**GV3P13**	9 to 13	**LC1D18**	65	**GV4PB25S**	10 to 25	**LC1D25**	65
				10	14	**GV2P16**	9 to 14	**LC1D18**	50 (5)	**GV3P18**	12 to 18	**LC1D18**	65	**GV4PB25S**	10 to 25	**LC1D25**	65
5	17.5	5	15.2			**GV2P20**	13 to 18	**LC1D18**	50 (5)	**GV3P18**	12 to 18	**LC1D18**	65	**GV4PB25S**	10 to 25	**LC1D25**	65
		7½	22	15	21	**GV2P21**	17 to 23	**LC1D25**	50 (5)	**GV3P25**	17 to 25	**LC1D25**	65	**GV4PB25S**	10 to 25	**LC1D25**	65
7½	25.3					**GV2P22**	20 to 25	**LC1D25**	50 (5)	**GV3P32**	23 to 32	**LC1D32**	65	**GV4PB50S**	20 to 50	**LC1D50A**	65
		10	28	20	27					**GV3P32**	23 to 32	**LC1D32**	65	**GV4PB50S**	20 to 50	**LC1D50A**	65
10	32.2			25	34					**GV3P40**	30 to 40	**LC1D40A**	65	**GV4PB50S**	20 to 50	**LC1D50A**	65
		15	42	30	40					**GV3P50**	37 to 50	**LC1D50A**	65	**GV4PB50S**	20 to 50	**LC1D50A**	65
15	48									**GV3P65**	48 to 65	**LC1D65A**	65	**GV4PB50S**	20 to 50	**LC1D50A**	65
		20	54	40	52					**GV3P65**	48 to 65	**LC1D65A**	65	**GV4PB80S**	40 to 80	**LC1D80**	65
20	62.1													**GV4PB115S**	40 to 80	**LC1D80**	65
25	78.2	25	68	50	65									**GV4PB115S**	40 to 80	**LC1D80**	65
30	92	30	80	60	77									**GV4PB115S**	65 to 115	**LC1D115A**	65
30	92	40	104	75	96	**JLL36250**	114 to 217	**LC1D115A**	100								
40	120	50	130	100	124	**LLL36400**	90 to 348	**LC1D150A**	100								

(1) Motor Full Load Amp Sizes are based on NEC Table 430.250.
(2) Requires use of GV1G09 or GV2GH7 line spacer for Type F rating.
(3) Add coil suffix to complete reference part number. For example, an LC1D09G7 includes a 120 V AC coil.
(4) Requires use of GV3G66 line spacer and GVAM11 short-circuit signaling contact for Type F rating.
(5) SCCR is 42 kA at 480Y when using GV2G busbar links.

AC-3e category

Coordination: Magnetic circuit breaker + Contactor + Overload relay

0.06 to 355 kW at 400/415, 440 and 500 V: type 1 coordination

Standard power ratings of 3-phase motors 50/60 Hz in category AC-3e									Circuit breaker			Contactor	Thermal overload relay	
400/415 V			440 V			500 V			Reference	Rating	Irm (1)	Reference (2)	Reference	Setting range
P	Ie	Iq	P	Ie	Iq	P	Ie	Iq						
kW	A	kA	kW	A	kA	kW	A	kA		A	A			A
0.06	0.2	50	**0.06**	0.19	50	–	–	–	**GV2LE03**	0.4	5	**LC1K06**	**LR2K0302**	0.16…0.23
–	–	–	**0.09**	0.28	50	–	–	–	**GV2LE03**	0.4	5	**LC1K06**	**LR2K0303**	0.23…0.36
0.09	0.3	50	–	–	–	–	–	–	**GV2LE03**	0.4	5	**LC1K06**	**LR2K0304**	0.36…0.54
0.12	0.44	50	**0.12**	0.37	50	–	–	–	**GV2LE04**	0.63	8	**LC1K06**	**LR2K0304**	0.36…0.54
–	–	–	**0.18**	0.55	50	–	–	–	**GV2LE04**	0.63	8	**LC1K06**	**LR2K0305**	0.54…0.8
0.18	0.6	50	**0.25**	0.76	50	–	–	–	**GV2LE05**	1	13	**LC1K06**	**LR2K0305**	0.54…0.8
0.25 **–**	0.85 –	50 –	– –	– –	– –	– **0.37**	– 0.88	– 50	**GV2LE05**	1	13	**LC1K06**	**LR2K0306**	0.8…1.2
0.37	1.1	50	**0.37**	1	50				**GV2LE06**	1.6	22.5	**LC1K06**	**LR2K0306**	0.8…1.2
0.55 –	1.5 –	50 –	**0.55** –	1.36 –	50 –	**0.55** **0.75**	1.2 1.5	50 50	**GV2LE06**	1.6	22.5	**LC1K06**	**LR2K0307**	1.2…1.8
–	–	–	**0.75**	1.7	50	–	–	–	**GV2LE07**	2.5	33.5	**LC1K06**	**LR2K0307**	1.2…1.8
0.75 –	1.9 –	50 –	– –	– –	– –	– **1.1**	– 2.2	– 50	**GV2LE07**	2.5	33.5	**LC1K06**	**LR2K0308**	1.8…2.6
1.1	2.7	50	**1.1**	2.5	50	–	–	–	**GV2LE08**	4	51	**LC1K06**	**LR2K0308**	1.8…2.6
1.5	3.6	50	**1.5**	3.3	50	**1.5**	2.9	50	**GV2LE08**	4	51	**LC1K06**	**LR2K0310**	2.6…3.7
–	–	–	–	–	–	**2.2**	3.9	50	**GV2LE08**	4	51	**LC1K06**	**LR2K0312**	3.7…5.5
2.2	4.9	50	**2.2**	4.5	50	**3**	5.2	50	**GV2LE10**	6.3	78	**LC1K06**	**LR2K0312**	3.7…5.5
–	–	–	**3**	5.9	50	–	–	–	**GV2LE14**	10	138	**LC1K06**	**LR2K0314**	5.5…8
–	–	–	**4**	7.8	15	–	–	–	**GV2LE14**	10	138	**LC1K09**	**LR2K0314**	5.5…8
3	6.5	50	–	–	–	**4**	6.8	10	**GV2LE14**	10	138	**LC1K09**	**LR2K0314**	5.5…8
4	8.5	50	–	–	–	–	–	–	**GV2LE14**	10	138	**LC1K09**	**LR2K0316**	8…11.5
5.5	11.5	15	**5.5**	10.5	8	**7.5**	12.4	6	**GV2LE16**	14	170	**LC1K12**	**LR2K0321**	10…14
–	–	–	**7.5**	14.1	8	**9**	13.9	6	**GV2LE16**	14	170	**LC1D18**	**LRD21**	12…18
7.5	15.5	15	**9**	16.9	8	–	–	–	**GV2LE20**	18	223	**LC1D18**	**LRD21**	12…18
9	18.1	15	–	–	–	**11**	17.6	4	**GV2LE22**	25	327	**LC1D25**	**LRD22**	16…24
11	22	15	**11**	20	6	**15**	23	4	**GV2LE22**	25	327	**LC1D25**	**LRD22**	16…24
15	29	10	**15**	27	6	**18.5**	28	4	**GV2LE32**	32	416	**LC1D32**	**LRD32**	23…32
18.5	35	50	**18.5**	32	50	**22**	33	10	**GV3L40**	40	560	**LC1D40A**	**LRD340**	30…40
22	41	50	**22**	39	50	**30**	44	10	**GV3L50**	50	700	**LC1D50A**	**LRD350**	37…50

(1) This setting is a general guidance, Ir and Irm should be adjusted according to motor characteristics and conditions of use.
(2) For reversing operation, replace the prefix LC1 with LC2.

Life Is On Schneider Electric

AC-3e category

Coordination: Magnetic circuit breaker + Contactor + Overload relay

30 to 355 kW at 400/415, 440 and 500 V: type 1 coordination

Standard power ratings of 3-phase motors 50/60 Hz in category AC-3e									Circuit breaker			Contactor	Thermal overload relay	
400/415 V			440 V			500 V			Reference	Rating	Irm (1)	Reference (2)	Reference	Setting range
P	Ie	Iq	P	Ie	Iq	P	Ie	Iq						
kW	A	kA	kW	A	kA	kW	A	kA		A	A			A
30	55	50	**30**	50	50	**37**	53	10	**GV3L65**	65	910	**LC1D65A**	**LRD365**	48…65
–	–	–	**37**	60	50	**37**	53	10	**GV3L65**	65	910	**LC1D65A**	**LRD365**	48…65
–	–	–	–	–	–	**45**	64	10	**GV3L65**	65	910	**LC1D80**	**LRD3361**	55...70
37	66	50	–	–	–	–	–	–	**GV3L73**	73	1120	**LC1D80A**	**LRD380**	62...80
–	–	–	**37**	60	70	–	–	–	**GV4L80**	80	880	**LC1D65A**	**LRD365**	48…65
–	–	–	–	–	–	**45**	64	30	**GV4L80**	80	880	**LC1D80**	**LRD3361**	55...70
37	66	100	–	–	–	–	–	–	**GV4L80**	80	1040	**LC1D80**	**LRD3361**	55...70
–	–	–	**45**	73	70	**55**	78	30	**GV4L80**	80	1040	**LC1D80**	**LRD3363**	63…80
45	80	100	–	–	–	–	–	–	**GV4L115**	115	1380	**LC1D95**	**LRD3365**	80…104
–	–	–	–	–	–	**75**	106	30	**GV4L115**	115	1380	**LC1D115**	**LRD4367**	95…120
–	–	–	**55**	90	70	–	–	–	**GV4L115**	115	1380	**LC1D115**	**LRD4365**	80…104
55	97	100	–	–	–	–	–	–	**GV4L115**	115	1495	**LC1D115**	**LRD4367**	95…120
–	–	–	–	–	–	**50**	90	(3)	**NSX160●MA** (3)	150	1500	**LC1D115**	**LRD4365**	80…104
–	–	–	–	–	–	**75**	106	(3)	**NSX160●MA** (3)	150	1500	**LC1D115**	**LRD4367**	95…120
55	97	(3)	–	–	–	–	–	–	**NSX160●MA** (3)	150	1350	**LC1D115**	**LRD4367**	95…120
75	132	(3)	–	–	(3)	–	–	(3)	**NSX160●MA** (3)	150	1800	**LC1D150**	**LRD4369**	110…140
–	–	–	**75**	125	(3)	**90**	128	(3)	**NSX250●MA** (3)	220	2100	**LC1D150**	**LRD4369**	110…140
–	–	–	**90**	146	(3)	–	–	–	(4)	–	–	(4)	(4)	–
90	160	(3)	–	–	–	**110**	156	(3)	(4)	–	–	(4)	(4)	–
110	195	(3)	–	–	–	–	–	–	(4)	–	–	(4)	(4)	–
–	–	–	**110**	178	(3)	–	–	–	(4)	–	–	(4)	(4)	–
–	–	–	–	–	–	**132**	184	(3)	(4)	–	–	(4)	(4)	–
–	–	–	**132**	215	(3)	–	–	–	(4)	–	–	(4)	(4)	–
132	230	(3)	–	–	–	–	–	–	(4)	–	–	(4)	(4)	–
–	–	–	–	–	–	**160**	224	(3)	(4)	–	–	(4)	(4)	–
–	–	–	**160**	256	(3)	–	–	–	(4)	–	–	(4)	(4)	–
160	280	(3)	**200**	321	(3)	–	–	–	(4)	–	–	(4)	(4)	–
–	–	–	–	–	–	**200**	280	(3)	(4)	–	–	(4)	(4)	–
–	–	–	–	–	–	**220**	310	(3)	(4)	–	–	(4)	(4)	–
200	350	(3)	**220**	353	(3)	–	–	–	(4)	–	–	(4)	(4)	–
–	–	–	**250**	401	(3)	–	–	–	(4)	–	–	(4)	(4)	–
–	–	–	–	–	–	**250**	344	(3)	(4)	–	–	(4)	(4)	–
220	388	(3)	–	–	–	–	–	–	(4)	–	–	(4)	(4)	–
250	430	(3)	**280**	470	(3)	**315**	432	(3)	(4)	–	–	(4)	(4)	–
–	–	–	–	–	–	**355**	488	(3)	(4)	–	–	(4)	(4)	–

(1) This setting is a general guidance, Ir and Irm should be adjusted according to motor characteristics and conditions of use.
(2) For reversing operation, replace the prefix LC1 with LC2.
(3) Reference to be completed by replacing the ● with the breaking performance code:

Breaking performance Iq (kA)	NSX100●MA		NSX160●MA and NSX250●MA		NSX400● and NSX630●	
400/415 V	36	70	36	70	70	150
440 V	35	65	35	65	65	130
500 V	25	50	25	50	50	70
660/690 V	8	10	8	10	20	20
Code	**F**	**H**	**F**	**H**	**H**	**L**

(4) Please consult your regional sales office.

AC-3e category

Coordination: Magnetic circuit breaker + Contactor + Overload relay

0.06 to 18.5 kW at 400/415, 440 and 500 V: type 2 coordination

Standard power ratings of 3-phase motors 50/60 Hz in category AC-3e									Circuit breaker			Contactor	Thermal overload relay	
400/415 V			440 V			500 V			Reference	Rating	Irm (1)	Reference (2)	Reference	Setting range
P	Ie	Iq	P	Ie	Iq	P	Ie	Iq						
kW	A	kA	kW	A	kA	kW	A	kA		A	A			A
0.06	0.2	130	**0.06**	0.19	130	**–**	–	–	**GV2L03** or **LE03**	0.4	5	**LC1D09**	**LRD02**	0.16…0.25
0.09	0.3	130	**0.09**	0.28	130	**–**	–	–	**GV2L03** or **LE03**	0.4	5	**LC1D09**	**LRD03**	0.25…0.40
			0.12	0.37	130				**GV2L04** or **LE04**	0.63	8	**LC1D09**	**LRD03**	0.25…0.40
0.12	0.44	130	**0.18**	0.55	130	**–**	–	–	**GV2L04** or **LE04**	0.63	8	**LC1D09**	**LRD04**	0.4…0.63
0.18	0.6	130							**GV2L05** or **LE05**	1	13	**LC1D09**	**LRD04**	0.4…0.63
0.25	0.85	130	**0.25**	0.76	130	**–**	–	–	**GV2L05** or **LE05**	1	13	**LC1D09**	**LRD05**	0.63…1
–	–	–	**–**	–	–	**0.37**	0.88	130	**GV2L05** or **LE05**	1	13	**LC1D09**	**LRD06**	1…1.7
0.37	1.1	130	**0.37**	1	130				**GV2L06** or **LE06**	1.6	22.5	**LC1D09**	**LRD05**	0.63…1
0.55	1.5	130	**0.55**	1.36	130	**0.55** **0.75**	1.2 1.5	130 130	**GV2L06** or **LE06**	1.6	22.5	**LC1D09**	**LRD06**	1…1.7
0.75	1.9	130	**0.75**	1.7	130	**1.1**	2.2	130	**GV2L07** or **LE07**	2.5	33.5	**LC1D09**	**LRD07**	1.6…2.5
1.1 **1.5**	2.7 3.6	130 130	**1.1** **–**	2.5 –	130 –	**1.5** **2.2**	2.9 3.9	130 130	**GV2L08** or **LE08**	4	51	**LC1D09**	**LRD08**	2.5…4
–	–	–	**1.5**	3.3	130	–	–	–	**GV2L08** or **LE08**	4	51	**LC1D09**	**LRD10**	4…6
2.2 **–**	4.9 –	130 –	**–** **–**	– –	– –	**–**	–	–	**GV2L10** or **LE10**	6.3	78	**LC1D09**	**LRD10**	4…6
– **–**	– –	– –	**2.2** **–**	4.5 –	50 –	**–** **3**	– 5.2	– 50	**GV2LE10**	6.3	78	**LC1D09**	**LRD10**	4…6
– **–**	– –	– –	**2.2**	4.5	130	**–** **3**	– 5.2	– 130	**GV2L10**	6.3	78	**LC1D09**	**LRD10**	4…6
3	6.5	130	**–**	–	–	**–**	–	–	**GV2L14** or **LE14**	10	10	**LC1D09**	**LRD12**	5.5…8
–	–	–	**3**	5.9	130/50	–	–	–	**GV2L14** or **LE14**	10	10	**LC1D09**	**LRD10**	4…6
–	–	–	**–**	–	–	**4**	6.8	10	**GV2LE14**	10	138	**LC1D12**	**LRD12**	5.5…8
–	–	–	**–**	–	–	**4**	6.8	10	**GV2L14**	10	138	**LC1D12**	**LRD12**	5.5…8
4	8.5	130	**–**	–	–	**–**	–	–	**GV2L14** or **LE14**	10	138	**LC1D09**	**LRD14**	7…10
–	–	–	**4**	7.8	15	**–**	–	–	**GV2LE14**	10	138	**LC1D09**	**LRD14**	7…10
–	–	–	**4**	7.8	20	**–**	–	–	**GV2L14**	10	138	**LC1D09**	**LRD14**	7…10
–	–	–	**–**	–	–	**5.5**	9.2	10	**GV2LE14**	10	138	**LC1D09**	**LRD14**	7…10
–	–	–	**–**	–	–	**5.5**	9.2	10	**GV2L14**	10	138	**LC1D09**	**LRD14**	7…10
5.5	11.5	130	**5.5**	10.4	50	**7.5**	12.4	10	**GV2L16**	14	170	**LC1D25**	**LRD16**	9…13
–	–	–	**7.5**	14.1	50	**–**	–	–	**GV2L16**	14	170	**LC1D25**	**LRD21**	12…18
7.5	15.5	50	**9**	16.9	20	**9**	13.9	10	**GV2L20**	18	223	**LC1D25**	**LRD21**	12…18
9 **11**	18.1 22	50 50	**–** **11**	– 20	– 20	**–** **–**	– –	– –	**GV2L22**	25	327	**LC1D25**	**LRD22**	16…24
– **–**	– –	– –	**–** **–**	– –	– –	**11** **15**	17.6 23	10 10	**GV2L22**	25	327	**LC1D32**	**LRD22**	16…24
15	29	50	**15**	27	50	**–**	–	–	**GV3L32**	32	448	**LC1D40A**	**LRD332**	23…32
–	–	–	**–**	–	–	**18.5**	28	10	**GV3L32**	32	448	**LC1D65A**	**LRD332**	23…32

(1) Irm: setting current of the magnetic trip.
(2) For reversing operation, replace the prefix LC1 with LC2.

Life Is On Schneider Electric

AC-3e category

Coordination: Magnetic circuit breaker + Contactor + Overload relay

0.18 to 22 kW at 690 V: type 2 coordination

Standard power ratings of 3-phase motors 50/60 Hz in category AC-3e			Limiter block	Circuit breaker			Contactor	Thermal overload relay	
690 V			Product type	Product type	Rating	Irm (1)	Product type	Product type	Setting range
P	Ie	Iq							
kW	A	kA			A	A			A
0.18	0.35	100	–	**GV2L03**	0.4	5	**LC1D09**	**LRD03**	0.25...0.4
0.25	0.49	100	–	**GV2L04**	0.63	8	**LC1D09**	**LRD04**	0.4…0.63
0.37	0.64	100	–	**GV2L05**	1	13	**LC1D09**	**LRD05**	0.63…1
0.55	0.87	100	–	**GV2L05**	1	13	**LC1D09**	**LRD05**	0.63…1
0.75	1.1	100	–	**GV2L06**	1.6	22.5	**LC1D09**	**LRD06**	1…1.6
1.1	1.6	100	–	**GV2L06**	1.6	22.5	**LC1D09**	**LRD06**	1…1.6
1.5	2.2	100	**LA9LB920** (2)	**GV2L07**	2.5	33.5	**LC1D25**	**LRD07**	1.6…2.5
2.2	2.9	50	**LA9LB920** (2)	**GV2L08**	4	51	**LC1D25**	**LRD08**	2.5…4
3	4	50	**LA9LB920** (2)	**GV2L08**	4	51	**LC1D25**	**LRD08**	2.5…4
4	5	50	**LA9LB920** (2)	**GV2L10**	6.3	78	**LC1D25**	**LRD10**	4…6
5.5	7	50	**LA9LB920** (2)	**GV2L14**	10	138	**LC1D32**	**LRD12**	5.5…8
7.5	9.3	50	**LA9LB920** (2)	**GV2L16**	14	170	**LC1D32**	**LRD16**	9…13
9	10.6	50	**LA9LB920** (2)	**GV2L16**	14	170	**LC1D32**	**LRD16**	9…13
11	13	50	**LA9LB920** (2)	**GV2L16**	14	170	**LC1D32**	**LRD16**	9…13
15	16.5	50	**LA9LB920** (2)	**GV2L20**	18	223	**LC1D32**	**LRD21**	12…18
18.5	21	50	**LA9LB920** (2)	**GV2L22**	25	327	**LC1D32**	**LRD22**	16…24
22	25	50	**LA9LB920** (2)	**GV2L32**	32	416	**LC1D32**	**LRD32**	23…32
22	25	50	**LA9LB920** (2)	**GV2L32**	32	416	**LC1D40A**	**LRD332**	23…32

(1) Irm: setting current of the magnetic trip.
*(2) For more information about the current limiter **LA9LB920,** please refer to pages A4/31 and A4/61 of TeSys Catalog, ref. MKTED210011EN.*

AC-3e category

Coordination: Magnetic circuit breaker + Contactor + Overload relay

18.5 to 90 kW at 400/415, 440 and 500 V: type 2 coordination

Standard power ratings of 3-phase motors 50/60 Hz in category AC-3e									Circuit breaker			Contactor	Thermal overload relay	
400/415 V			440 V			500 V			Reference	Rating	Irm (1)	Reference (2)	Reference	Setting range
P	Ie	Iq	P	Ie	Iq	P	Ie	Iq						
kW	A	kA	kW	A	kA	kW	A	kA		A	A			A
18.5	35	50	–	–	–	–	–	–	**GV3L40**	40	560	**LC1D50A**	**LRD340**	30…40
–	–	–	**18.5**	32	50	–	–	–	**GV3L40**	40	560	**LC1D65A**	**LRD340**	30…40
22	41	50	–	–	–	–	–	–	**GV3L50**	50	700	**LC1D50A**	**LRD350**	37…50
–	–	–	**22**	39	50	**30**	44	10	**GV3L50**	50	700	**LC1D65A**	**LRD350**	37…50
30	55	50	**30**	50	50	**37**	53	10	**GV3L65**	65	910	**LC1D65A**	**LRD365**	48…65
37	66	50	–	–	–	–	–	–	**GV3L73**	73	1120	**LC1D80A**	**LRD380**	62...80
–	–	–	**37**	60	70	–	–	–	**GV4L80S**	80	880	**LC1D65A**	**LRD365**	48…65
37	66	100	**45**	73	70	(4)	(4)	(4)	**GV4L80S**	80	1040	**LC1D80**	**LRD3363**	63…80
45	80	100	**55**	88	70	(4)	(4)	(4)	**GV4L115S**	115	1380	**LC1D115**	**LR9D5367**	60…100
55	97	100	–	–	–	(4)	(4)	(4)	**GV4L115S**	115	1495	**LC1D115**	**LR9D5369**	90…150
–	–	–	–	–	–	**55**	78	(4)	**NSX100●MA** (3)	100	1040	**LC1D80**	**LRD3363**	63…80
45	80	(4)	**55**	88	(4)	–	–	–	**NSX160●MA** (3)	100	1300	**LC1D115**	**LR9D5367**	60…100
55	97	(4)	–	–	–	–	–	–	**NSX160●MA** (3)	150	1500	**LC1D115**	**LR9D5369**	90…150
–	–	–	–	–	–	**75**	106	(4)	**NSX160●MA** (3)	150	1950	**LC1D115**	**LR9D5369**	90…150
75	132	(4)	**75**	125	(4)	–	–	–	**NSX250●MA** (3)	220	1950	**LC1D150**	**LR9D5369**	90…150
–	–	–	**90**	146	(4)	–	–	–	**NSX250●MA** (3)	220	1950	**LC1D150**	**LR9D5369**	90…150
–	–	–	–	–	–	**90**	128	(4)	**NSX250●MA** (3)	220	1950	**LC1D150**	**LR9D5369**	90…150

(1) Irm: setting current of the magnetic trip.
(2) For reversing operation, replace the prefix LC1 with LC2.
(3) Reference to be completed by replacing the ● with the breaking performance code:

Breaking performance Iq (kA)	NSX100●MA		NSX160●MA and NSX250●MA		NSX400● and NSX630●	
400/415 V	36	70	36	70	70	150
440 V	35	65	35	65	65	130
500 V	25	50	25	50	50	70
660/690 V	8	10	8	10	20	20
Code	**F**	**H**	**F**	**H**	**H**	**L**

(4) Please consult your regional sales office.

Life Is On Schneider Electric

Coordination: Magnetic circuit breaker + Contactor + Overload relay

45 to 335 kW at 400/415 V: type 2 coordination (with TeSys GV4 or ComPacT NSX circuit breakers and LR9G overload relays)

Standard power ratings of 3-phase motors 50/60 Hz in category AC-3e			Circuit breaker		Contactor	Electronic thermal overload relay	
400/415 V			Product type (1)	Irm (2)	Product type	Product type	Ir setting (2)
P	Ie	Iq (max)					
kW	A	kA		A			A
45	80	100	GV4L/GV4LE115●	1265	LC1G115	LR9G115	80
45	80	100	NSX100● + MA	1100	LC1G115	LR9G115	80
55	97	130	GV4L/GV4LE115●	1265	LC1G115	LR9G225	97
55	97	130	NSX160● + MA	1500	LC1G115	LR9G225	97
75	132	130	NSX250● + MA	1800	LC1G150	LR9G225	132
90	160	130	NSX250● + MA	2640	LC1G185	LR9G225	160
110	195	130	NSX400● + MicroLogic 1.3 M	2640	LC1G225	LR9G225	195
110	195	130	NSX400● + MicroLogic 1.3 M	3520	LC1G265	LR9G500	195
132	230	130	NSX400● + MicroLogic 1.3 M	3520	LC1G265	LR9G500	230
160	280	130	NSX630● + MicroLogic 1.3 M	3840	LC1G330	LR9G500	280
200	350	130	NSX630● + MicroLogic 1.3 M	5500	LC1G400	LR9G500	350
220	380	130	NSX630● + MicroLogic 1.3 M	5500	LC1G500	LR9G500	380
250	430	130	NS800● + MicroLogic 5.0 LR OFF	6000	LC1G500	LR9G500	430
300	500	130	NS800● + MicroLogic 5.0 LR OFF	6400	LC1G630	LR9G630	500
335	575	130	NS800● + MicroLogic 5.0 LR OFF	7200	LC1G630	LR9G630	575

(1) Product type to be completed by replacing the ● with the breaking performance code:

Rated conditional short-circuit (kA)	GV4L115●/ GV4LE115●			NSX100●/ NSX160●/ NSX250●/ NSX400●/ NSX630●					NS800●
Breaking performance code	B	N	S	F	N	H	S	L	L
400/415 V	25	50	100	36	50	70	100	130	150

55 to 355 kW at 440 V: type 2 coordination (with TeSys GV4 or ComPacT NSX/NS circuit breakers and LR9G overload relays)

Standard power ratings of 3-phase motors 50/60 Hz in category AC-3e			Circuit breaker		Contactor	Electronic thermal overload relay	
440 V			Product type (1)	Irm (2)	Product type	Product type	Ir setting (2)
P	Ie	Iq (max)					
kW	A	kA		A			A
55	88	130	GV4L/GV4LE115●	1265	LC1G115	LR9G115	88
55	88	130	NSX160● + MA	1500	LC1G115	LR9G115	88
75	120	130	NSX160● + MA	1800	LC1G150	LR9G225	120
90	145	130	NSX250● + MA	2640	LC1G150	LR9G225	145
110	176	130	NSX250● + MA	2640	LC1G185	LR9G225	177
132	209	130	NSX400● + MicroLogic 1.3 M	2860	LC1G225	LR9G225	209
160	255	130	NSX400● + MicroLogic 1.3 M	3520	LC1G265	LR9G500	255
200	318	130	NSX630● + MicroLogic 1.3 M	4160	LC1G330	LR9G500	318
220	343	130	NSX630● + MicroLogic 1.3 M	5500	LC1G400	LR9G500	343
250	390	130	NSX630● + MicroLogic 1.3 M	5500	LC1G400	LR9G500	390
300	466	130	NS800● + MicroLogic 5.0 LR OFF	6500	LC1G500	LR9G500	466
335	521	130	NS800● + MicroLogic 5.0 LR OFF	6400	LC1G630	LR9G630	521
355	554	130	NS800● + MicroLogic 5.0 LR OFF	7200	LC1G630	LR9G630	554

(1) Product type to be completed by replacing the ● with the breaking performance code:

Rated conditional short-circuit (kA)	GV4L115●/ GV4LE115●			NSX100●/ NSX160●/ NSX250●					NSX400●/ NSX630●					NS800●
Breaking performance code	B	N	S	F	N	H	S	L	F	N	H	S	L	L
440 V	20	50	70	35	50	65	100	130	30	42	65	100	130	150

(2) This setting is a general guidance, Ir and Irm should be adjusted according to motor characteristics and conditions of use.

AC-3e category

Coordination: Magnetic circuit breaker + Contactor + Overload relay

65 to 425 kW at 500 V: type 2 coordination (with TeSys GV4 or ComPacT NSX / NS circuit breakers and LR9G overload relays)

Standard power ratings of 3-phase motors 50/60 Hz in category AC-3e			Circuit breaker		Contactor	Electronic thermal overload relay	
500 V			Product type (1)	Irm (2)	Product type	Product type	Ir setting (2)
P	Ie	Iq (max)					
kW	A	kA		A			A
65	92	100	**GV4L/GV4LE115●**	1265	**LC1G115**	**LR9G115**	92
65	92	100	**NSX160● + MA150**	1300	**LC1G115**	**LR9G115**	92
90	128	100	**NSX250● + MA220**	1950	**LC1G150**	**LR9G225**	128
110	156	100	**NSX250● + MA220**	2200	**LC1G185**	**LR9G225**	156
132	184	100	**NSX400● + MicroLogic 1.3 M**	2560	**LC1G225**	**LR9G225**	184
160	224	70	**NSX400● + MicroLogic 1.3 M**	3200	**LC1G265**	**LR9G500**	224
200	280	70	**NSX630● + MicroLogic 1.3 M**	3840	**LC1G330**	**LR9G500**	280
250	344	70	**NSX630● + MicroLogic 1.3 M**	5500	**LC1G400**	**LR9G500**	344
295	405	70	**NSX630● + MicroLogic 1.3 M**	6500	**LC1G500**	**LR9G500**	405
375	516	70	**NS800● + MicroLogic 5.0 LR OFF**	6400	**LC1G630**	**LR9G630**	516
425	584	70	**NS800● + MicroLogic 5.0 LR OFF**	7200	**LC1G800**	**LR9G630**	584

(1) Product type to be completed by replacing the ● with the breaking performance code:

Rated conditional short-circuit (kA)	GV4L115●/ GV4LE115●			NSX100●					NSX160●/ NSX250●					NSX400●/ NSX630●					NS800●
Breaking performance code	B	N	S	F	N	H	S	L	F	N	H	S	L	F	N	H	S	L	L
500 V	10	25	30	25	36	50	65	70	30	36	50	65	70	25	30	50	65	70	100

(2) This setting is a general guidance, Ir and Irm should be adjusted according to motor characteristics and conditions of use.

Life Is On Schneider Electric

AC-3e category

Coordination: Magnetic circuit breaker + Contactor + Overload relay

0.06 to 30 kW at 400/415 and 690 V: type 2 coordination

Standard power ratings of 3-phase motors 50/60 Hz in category AC-3e						Circuit breaker			Contactor	Electronic thermal overload relay	
400/415 V			690 V			Reference	Rating	Irm	Reference	Reference	Setting range
P	Ie	Iq	P	Ie	Iq						
kW	A	kA	kW	A	kA		A	A			A
0.06	0.2	100	**–**	–	–	**GV2L03**	0.4	5	**LC1D09**	**LR9D01**	0.1…0.5
0.09	0.3	100	**–**	–	–	**GV2L03**	0.4	5	**LC1D09**	**LR9D01**	0.1…0.5
0.12	0.44	100	**–**	–	–	**GV2L04**	0.63	8	**LC1D18**	**LR9D02**	0.4…2.0
0.18	0.6	100	**–**	–	–	**GV2L05**	1	8	**LC1D18**	**LR9D02**	0.4…2.0
0.25	0.85	100	**–**	–	–	**GV2L05**	1	13	**LC1D18**	**LR9D02**	0.4…2.0
0.37	1.1	100	**–**	–	–	**GV2L06**	1.6	13	**LC1D18**	**LR9D02**	0.4…2.0
0.55	1.5	100	**–**	–	–	**GV2L06**	1.6	22.5	**LC1D18**	**LR9D02**	0.4…2.0
0.75	1.9	100	**–**	–	–	**GV2L07**	2.5	33.5	**LC1D18**	**LR9D08**	1.6…8.0
1.1	2.7	100	**–**	–	–	**GV2L08**	4	51	**LC1D18**	**LR9D08**	1.6…8.0
1.5	3.6	100	**–**	–	–	**GV2L08**	4	51	**LC1D18**	**LR9D08**	1.6…8.0
2.2	4.9	100	**–**	–	–	**GV2L10**	6.3	78	**LC1D18**	**LR9D08**	1.6…8.0
3	6.5	100	**–**	–	–	**GV2L14**	10	138	**LC1D25**	**LR9D32**	6.4…32
4	8.5	100	**–**	–	–	**GV2L14**	10	138	**LC1D25**	**LR9D32**	6.4…32
5.5	11.5	100	**–**	–	–	**GV2L16**	14	170	**LC1D25**	**LR9D32**	6.4…32
7.5	15.5	50	**–**	–	–	**GV2L20**	18	223	**LC1D25**	**LR9D32**	6.4…32
11	22	50	**–**	–	–	**GV2L22**	25	327	**LC1D25**	**LR9D32**	6.4…32
15	29	50	**–**	–	–	**GV3L32**	40	448	**LC1D65A**	**LR9D110S**	22…110
18.5	35	50	**–**	–	–	**GV3L40**	40	560	**LC1D65A**	**LR9D110S**	22…110
22	41	50	**–**	–	–	**GV3L50**	50	700	**LC1D65A**	**LR9D110S**	22…110
30	55	50	**–**	–	–	**GV3L65**	65	910	**LC1D65A**	**LR9D110S**	22…110
–	–	–	**0.37**	0.64	50	**GV2L05**	1	13	**LC1D09**	**LR9D02**	0.4…2.0
–	–	–	**0.55**	0.87	50	**GV2L05**	1	13	**LC1D09**	**LR9D02**	0.4…2.0
–	–	–	**0.75**	1.1	50	**GV2L06**	1.6	22.5	**LC1D09**	**LR9D02**	0.4…2.0
–	–	–	**1.1**	1.6	50	**GV2L07 + LA9LB920** (1)	2.5	33.5	**LC1D25**	**LR9D08**	1.6…8.0
–	–	–	**1.5**	2.1	50	**GV2L07 + LA9LB920** (1)	2.5	33.5	**LC1D25**	**LR9D08**	1.6…8.0
–	–	–	**2.2**	2.8	50	**GV2L08 + LA9LB920** (1)	4	51	**LC1D25**	**LR9D08**	1.6…8.0
–	–	–	**3**	4	50	**GV2L08 + LA9LB920** (1)	4	51	**LC1D25**	**LR9D08**	1.6…8.0
–	–	–	**4**	5	50	**GV2L10 + LA9LB920** (1)	6.3	78	**LC1D25**	**LR9D08**	1.6…8.0
–	–	–	**5.5**	7	50	**GV2L14 + LA9LB920** (1)	10	138	**LC1D25**	**LR9D32**	6.4…32
–	–	–	**7.5**	8.9	50	**GV2L16 + LA9LB920** (1)	14	138	**LC1D25**	**LR9D32**	6.4…32
–	–	–	**11**	13	3	**GV3L16 + LA9LB920** (1)	14	252	**LC1D32**	**LR9D32**	6.4…32
–	–	–	**15**	16.5	3	**GV2L22 + LA9LB920** (1)	18	327	**LC1D32**	**LR9D32**	6.4…32
–	–	–	**18.5**	21	3	**GV3L25 + LA9LB920** (1)	25	350	**LC1D65A**	**LR9D32**	6.4…32
–	**–**	**–**	**22**	25	3	**GV2L32 + LA9LB920** (1)	32	416	**LC1D65A**	**LR9D32**	6.4…32

*(1) For more information about the current limiter **LA9LB920**, please refer to pages A4/32 and A4/50.*

AC-3e category

Coordination: Magnetic circuit breaker + Contactor + Overload relay

30 to 500 kW at 690 V: type 2 coordination (with ComPacT NSX / NS circuit breakers and LR9G overload relays)

Standard power ratings of 3-phase motors 50/60 Hz in category AC-3e			Circuit breaker		Contactor	Electronic thermal overload relay	
690 V			Product type (1)	Irm (2)	Product type	Product type	Ir setting (2)
P	Ie	Iq (max)					
kW	A	kA		A			A
30	32	100	**NSX100● + MA**	550	**LC1G115**	**LR9G115**	32
37	39	100	**NSX100● + MA**	550	**LC1G115**	**LR9G115**	39
45	47	100	**NSX100● + MA**	650	**LC1G115**	**LR9G115**	47
55	57	100	**NSX100● + MA**	1100	**LC1G115**	**LR9G115**	57
75	77	100	**NSX100● + MA**	1100	**LC1G115**	**LR9G225**	77
90	93	100	**NSX250● + MA**	1650	**LC1G150**	**LR9G225**	93
110	113	100	**NSX250● + MA**	1650	**LC1G185**	**LR9G225**	113
132	134	100	**NSX250● + MA**	1800	**LC1G225**	**LR9G225**	134
160	162	100	**NSX250● + MA**	2420	**LC1G225**	**LR9G225**	162
200	203	100	**NSX400● + MicroLogic 1.3 M**	2640	**LC1G265**	**LR9G500**	203
220	223	100	**NSX400● + MicroLogic 1.3 M**	3520	**LC1G330**	**LR9G500**	223
250	250	100	**NSX400● + MicroLogic 1.3 M**	3520	**LC1G400**	**LR9G500**	250
315	313	100	**NSX630● + MicroLogic 1.3 M**	5500	**LC1G400**	**LR9G500**	313
335	335	100	**NSX630● + MicroLogic 1.3 M**	5500	**LC1G500**	**LR9G500**	335
355	354	100	**NSX630● + MicroLogic 1.3 M**	5500	**LC1G500**	**LR9G500**	354
375	374	100	**NSX630● + MicroLogic 1.3 M**	5500	**LC1G630**	**LR9G630**	374
400	400	100	**NSX630● + MicroLogic 1.3 M**	5500	**LC1G630**	**LR9G630**	400
450	455	100	**NS800● + MicroLogic 5.0 LR OFF**	6000	**LC1G630**	**LR9G630**	455
475	475	100	**NS800● + MicroLogic 5.0 LR OFF**	6500	**LC1G630**	**LR9G630**	475
500	493	100	**NS800● + MicroLogic 5.0 LR OFF**	6500	**LC1G630**	**LR9G630**	493

(1) Product type to be completed by replacing the ● with the breaking performance code:

Rated conditional short-circuit (kA)	NSX100●/ NSX250●/ NSX400●/ NSX630●	
Breaking performance code	**HB1**	**HB2**
690 V	75	100

(2) This setting is a general guidance, Ir and Irm should be adjusted according to motor characteristics and conditions of use.

Life Is On Schneider Electric

AC-3e category

Coordination: Star-Delta with NFC or DIN fuses + Contactors + Overload relay

11 to 375 kW at 400/415 and 440 V: type 1 coordination

Maximum operating rate: LC3K: 12 starts/hour; LC3D: 30 starts/hour.
Maximum starting time: LC3K and LC3D: 30 seconds.

Standard power ratings of 3-phase motors 50/60 Hz in category AC-3e								Fuse carrier (basic block)	aM fuses		Star-Delta contactors	Thermal overload relay	
400/415 V				440 V				Reference	Size	Rating	Reference	Reference	Setting range
P	Ie	IrD (1)	Iq	P	Ie	IrD (1)	Iq						
kW	A	A	kA	kW	A	A	kA			A			A
11	22	12	100	**11**	20.1	12	100	**GK1EK**	14 x 51	25	**LC3D12A**	**LRD16**	9…13
15	29	16	100	**15**	26.5	15	100	**GK1EK**	14 x 51	32	**LC3D18A**	**LRD21**	12…18
18.5	35	20	100	**18.5**	32.8	19	100	**GK1EK**	14 x 51	40	**LC3D18A**	**LRD22**	16…24
–	–	–	–	**22**	39	23	100	**GS●J**	22 x 58	50	**LC3D18A**	**LRD22**	16…24
22	41	24	100	–	–	–	–	**GS●J**	22 x 58	50	**LC3D32A**	**LRD32**	23…32
–	–	–	–	**30**	51	30	100	**GS●J**	22 x 58	63	**LC3D32A**	**LRD32**	23…32
30	55	33	100	**37**	60	37	100	**GS●J**	22 x 58	80	**3 x LC1D40A**	**LRD340**	30…40
37	66	40	100	–	–	–	–	**GS●J**	22 x 58	80	**3 x LC1D40A**	**LRD350**	37…50
–	–	–	–	**45**	73	44	100	**GS●J**	22 x 58	80	**3 x LC1D50A**	**LRD350**	37…50
45	80	47	100	–	–	–	–	**GS●J**	22 x 58	100	**3 x LC1D50A**	**LRD350**	37…50
–	–	–	–	**55**	88	52	100	**GS●K**	22 x 58	100	**3 x LC1D50A**	**LRD365**	48…65
55	97	58	100	–	–	–	–	**GS●K**	22 x 58	125	**3 x LC1D65A**	**LRD365**	48…65
75	132	78	100	**75**	120	72	100	**GS●L**	T0	160	**LC3D80**	**LRD3363**	63…80
–	–	–	–	**90**	145	84	100	**GS●L**	T0	160	**LC3D115**	**LRD4365**	80…104
90	160	95	100	–	–	–	–	**GS●N**	T1	200	**LC3D115**	**LRD4367**	95…120
110	195	115	100	**110**	177	103	100	**GS●N**	T1	200	**LC3D115**	**LRD4367**	95…120
132	230	139	100	**132**	209	124	100	**GS●QQ**	T2	250	**LC3D150**	**LRD4369**	110…140
160	280	165	100	**160**	256	148	100	(2)	–	–	(2)	(2)	–
–	–	–	–	**200**	321	185	100	(2)	–	–	(2)	(2)	–
220	385	225	100	–	–	–	–	(2)	–	–	(2)	(2)	–
–	–	–	–	**250**	401	233	100	(2)	–	–	(2)	(2)	–
280	480	278	100	–	–	–	–	(2)	–	–	(2)	(2)	–
–	–	–	–	**315**	505	293	100	(2)	–	–	(2)	(2)	–
315	555	322	100	**355**	518	300	100						
–	–	–	–	**375**	575	334	100	(2)	–	–	(2)	(2)	–

(1) IrD: current in the motor windings in delta connection.
(2) Please consult your regional sales office.

AC-3e category

Coordination: Star-Delta with NFC or DIN fuses + Contactors + Overload relay

1.5 to 355 kW at 400/415 and 440 V: type 2 coordination

Maximum operating rate: LC1D: 30 starts/hour; LC1F: 12 starts/hour.
Maximum starting time: LC1D: 30 seconds; LC1F: 20 seconds.

Standard power ratings of 3-phase motors 50/60 Hz in category AC-3e						Switch-disconnector-fuse	aM fuses		Star-Delta contactors	Thermal overload relay	
400/415 V			440 V			Reference	Size	Rating	Reference	Reference	Setting range
P	Ie	Iq	P	Ie	Iq						
kW	A	kA	kW	A	kA			A			A
1.5	3.6	50	**1.5**	3.3	50	**GS1DD**	10 x 38	4	3 x **LC1D09**	**LRD08**	2.5…4
2.2	4.9	50	**2.2**	4.5	50	**GS1DD**	10 x 38	6	3 x **LC1D09**	**LRD10**	4…6
3	6.5	50	**3**	5.9	50	**GS1DD**	10 x 38	8	3 x **LC1D09**	**LRD12**	5.5…8
4	8.5	50	**4**	7.8	50	**GS1DD**	10 x 38	10	3 x **LC1D09**	**LRD14**	7…10
5.5	11.5	50	**5.5**	10.5	50	**GS1DD**	10 x 38	16	3 x **LC1D12**	**LRD16**	9…13
7.5	15.5	50	**7.5**	14.1	50	**GS1DD**	10 x 38	16	3 x **LC1D18**	**LRD21**	12…18
9 **11**	18.1 22	100 100	**9** **11**	16.9 20	100 100	**GS●F**	14 x 51	25	3 x **LC1D25**	**LRD22**	 16…24
15	29	100	**15**	27	100	**GS●F**	14 x 51	32	3 x **LC1D32**	**LRD32**	23…32
18.5	35	100	**18.5**	34	100	**GS●F**	14 x 51	40	3 x **LC1D40A**	**LRD340**	30…40
22	41	100	**22**	39	100	**GS●J**	22 x 58	50	3 x **LC1D50A**	**LRD350**	37…50
30	55	100	**30**	51	100	**GS●J**	22 x 58	80	3 x **LC1D65A**	**LRD365**	48…65
37	66	100	**37**	64	100	**GS●J**	22 x 58	80	3 x **LC1D80**	**LRD3363**	63…80
–	–	–	**45**	73	100	**GS●J**	22 x 58	80	3 x **LC1D80**	**LRD3365**	80…104
45	80	100	–	–	–	**GS●J**	22 x 58	100	3 x **LC1D115**	**LR9D5369**	90…150
–	–	–	**55**	88	100	**GS●L**	T0	125	3 x **LC1D150**	**LR9D5369**	90…150
55	97	100	–	–	–	**GS●L**	T0	125	3 x **LC1D150**	**LR9D5369**	90…150
–	–	–	**75**	120	100	**GS●L**	T0	160	3 x **LC1D150**	**LR9D5369**	90…150
355	610	100	–	–	–	**GS2V**	T4	800	3 x **LC1F780**	**LR9F7381**	380…630

Life Is On Schneider Electric

AC-3e category

Coordination: Star-Delta with Fuses (DIN type aM) + Contactors + Overload relay

Contactor: **Maximum operating rate**: 30 starts/hour - **Maximum starting time**: 30 seconds.
The coordination table is for normal starting conditions (Class 10e/ 20e). For other heavy starting applications with long start times, please contact your technical support.
RE17RMMWS timer to be used for Star-Delta starter application.

90 to 335 kW at 400/415 V: type 2 coordination

Standard power ratings of 3-phase motors 50/60 Hz in category AC-3e			Switch-disconnector	aM fuses		Contactor Line (KM2) / Delta (KM3) (1)	Contactor Star (KM1) (1)	Electronic thermal overload relay	
400/415 V			Product type	Size	Rating	Product type		Product type	Ir setting (2)
P	Ie	Iq (max)							
kW	A	kA			A				A
90	160	80	GS●N	1	200	LC1G115	LC1D65	LR9G115	92
110	195	80	GS●N	1	250	LC1G150	LC1D80	LR9G225	113
132	230	80	GS●QQ	2	315	LC1G185	LC1G115	LR9G225	133
160	280	80	GS●QQ	2	400	LC1G225	LC1G115	LR9G225	162
200	350	80	GS2●S	3	500	LC1G265	LC1G115	LR9G225	202
220	380	80	GS2●S	3	500	LC1G330	LC1G150	LR9G500	219
250	430	80	GS2●S	3	500	LC1G400	LC1G150	LR9G500	248
315	540	80	GS2●S	3	630	LC1G500	LC1G225	LR9G500	312
335	575	80	GS2●V	4	800	LC1G500	LC1G225	LR9G500	332

110 to 400 kW at 440 V: type 2 coordination

Standard power ratings of 3-phase motors 50/60 Hz in category AC-3			Switch-disconnector	aM fuses		Contactor Line (KM2) / Delta (KM3) (1)	Contactor Star (KM1) (1)	Electronic thermal overload relay	
440 V			Product type	Size	Rating	Product type		Product type	Ir setting (2)
P	Ie	Iq max							
kW	A	kA			A				A
110	177	80	GS●N	1	200	LC1G115	LC1D65	LR9G115	102
132	209	80	GS●N	1	250	LC1G150	LC1D80	LR9G225	121
160	255	80	GS●QQ	2	315	LC1G150	LC1G115	LR9G225	147
200	318	80	GS●QQ	2	400	LC1G185	LC1G115	LR9G225	184
220	343	80	GS2●S	3	500	LC1G225	LC1G115	LR9G225	198
250	390	80	GS2●S	3	500	LC1G265	LC1G150	LR9G500	225
315	490	80	GS2●S	3	500	LC1G330	LC1G185	LR9G500	283
355	554	80	GS2●S	3	630	LC1G330	LC1G225	LR9G500	320
400	627	80	GS2●V	4	800	LC1G400	LC1G225	LR9G500	362

90 to 315 kW at 500 V: type 2 coordination

Standard power ratings of 3-phase motors 50/60 Hz in category AC-3			Switch-disconnector	aM fuses		Contactor Line (KM2) / Delta (KM3) (1)	Contactor Star (KM1) (1)	Electronic thermal overload relay	
500 V			Product type	Size	Rating	Product type		Product type	Ir setting (2)
P	Ie	Iq max							
kW	A	kA			A				A
90	128	80	GS●N	1	200	LC1G115	LC1D65	LR9G115	74
110	156	80	GS●N	1	250	LC1G115	LC1D65	LR9G115	90
132	184	80	GS●QQ	2	315	LC1G115	LC1D65	LR9G225	106
160	224	80	GS●QQ	2	400	LC1G150	LC1D80	LR9G225	129
200	280	80	GS2●S	3	500	LC1G185	LC1G115	LR9G225	162
220	308	80	GS2●S	3	500	LC1G185	LC1G115	LR9G500	178
250	344	80	GS2●S	3	500	LC1G225	LC1G150	LR9G500	199
315	432	80	GS2●S	3	630	LC1G265	LC1G185	LR9G630	249

(1) Please refer to diagram page A5/41.
(2) This setting is a general guidance, Ir should be adjusted according to motor characteristics and conditions of use.

AC-3e category

Coordination: Star-Delta with BS fuses + Contactors + Overload relay

1.5 to 80 kW at 400/415 and 440 V: type 2 coordination

Maximum operating rate: LC1D: 30 starts/hour.
Maximum starting time: LC1D: 30 seconds.

Standard power ratings of 3-phase motors 50/60 Hz in category AC-3e						Switch-disconnector-fuse	BS fuses		Star-Delta contactors	Thermal overload relay	
400/415 V			440 V			Reference	Size	Rating	Reference	Reference	Setting range
P	Ie	Iq	P	Ie	Iq						
kW	A	kA	kW	A	kA			A			A
1.5	3.6	50	**1.5**	3.3	50	**GS1DDB**	A1	NIT 16	3 x **LC1D09**	**LRD08**	2.5…4
2.2	4.9	50	**2.2**	4.5	50	**GS1DDB**	A1	NIT 16	3 x **LC1D09**	**LRD10**	4…6
3	6.5	50	**3**	5.9	50	**GS1DDB**	A1	NIT 20	3 x **LC1D09**	**LRD12**	5.5…8
4	8.5	50	**4**	7.8	50	**GS1DDB**	A1	NIT 20	3 x **LC1D09**	**LRD14**	7…10
5.5	11.5	50	**5.5**	10.5	50	**GS1DDB**	A1	NIT 20M25	3 x **LC1D12**	**LRD16**	9…13
7.5	15.5	50	**7.5**	14.1	50	**GS1DDB**	A1	NIT 20M32	3 x **LC1D18**	**LRD21**	12…18
9	18.1	50	**9**	16.9	50	**GS2GB**	A2	TIA 32M35	3 x **LC1D18**	**LRD21**	12…18
11	22	80	**11**	20	50	**GS2GB**	A2	TIA 32M50	3 x **LC1D25**	**LRD22**	16…24
15	29	80	**15**	27	50	**GS2GB**	A2	TIA 32M63	3 x **LC1D32**	**LRD32**	23…32
22	41	50	**22**	39	50	**GS2GB**	A3	TIS 63M80	3 x **LC1D50A**	**LRD350**	37…50
–	–	–	**30**	51	50	**GS2GB**	A3	TIS 63M100	3 x **LC1D65A**	**LRD365**	48…65
30	55	50	**–**	–	–	**GS2GB**	A3	TIS 63M100	3 x **LC1D65A**	**LRD365**	48…65
45	80	50	**45**	73	50	**GS2LLB**	A4	TCP 100M125	3 x **LC1D80**	**LRD3363**	63...80
55	97	80	**55**	88	80	**GS2LLB**	A4	TCP 100M160	3 x **LC1D115**	**LR9D5369**	90…150
80	141	80	**80**	128	80	**GS2LB**	B2	TF 200M250	3 x **LC1D150**	**LR9D5369**	90…150

Life Is On Schneider Electric

AC-3e category

Coordination: Star-Delta with Thermal magnetic circuit breaker + Contactors

1.5 to 300 kW at 400/415 and 440 V: type 1 coordination

Maximum operating rate: LC3K: 12 starts/hour; LC3D: 30 starts/hour.
Maximum starting time: 30 seconds.

Standard power ratings of 3-phase motors 50-60 Hz in category AC-3e								Circuit breaker		Star-delta contactors
400/415 V				440 V				Reference *References in italics are available in CEE zone only*	Setting range of thermal trips	Reference
P	Ie	IrD (1)	Iq (2)	P	Ie	IrD (1)	Iq (2)			
kW	A	A	kA	kW	A	A	kA		A	
1.5	3.6	2	50	**1.5**	3.3	1.8	50	**GV2ME08** *GV2ME08AP*	2.5…4	**LC3K06**
2.2 –	4.9 –	2.9 –	50 –	**2.2** **3**	4.5 5.9	2.6 3.3	50 50	**GV2ME10** *GV2ME10AP*	4…6.3	**LC3K06**
3 **4**	6.5 8.5	3.8 4.9	50 50	– **4**	– 7.8	– 4.6	– 15	**GV2ME14** *GV2ME14AP*	6…10	**LC3K06**
5.5	11.5	6.4	15	**5.5**	10.5	6	8	**GV2ME16** *GV2ME16AP*	9…14	**LC3K06**
7.5	15.5	8.6	15	**7.5**	14.1	7.9	8	**GV2ME20** *GV2ME20AP*	13…18	**LC3K09**
–	–	–	–	**9**	16.9	9.8	8	**GV2ME20** *GV2ME20AP*	13…18	**LC3D12A**
9	18.1	10	15	**11**	20	12	6	**GV2ME21** *GV2ME21AP*	17…23	**LC3D12A**
11	22	12	15	–	–	–	–	**GV2ME22** *GV2ME22AP*	20…25	**LC3D12A**
15	29	17	10	**15**	27	15	6	**GV2ME32** *GV2ME32AP*	24…32	**LC3D18A**
18.5	35	20	50	**18.5**	32	19	50	**GV3P40**	30…40	**LC3D18A**
–	–	–	–	**22**	39	23	50	**GV3P50**	37…50	**LC3D32A**
22	41	24	50	**30**	51	30	50	**GV3P50**	37…50	**LC3D32A**
30	55	33	50	**30**	51	30	50	**GV3P65**	48…65	**LC3D32A**
37	66	40	50	**37**	64	37	50	**GV3P65**	48…65	3 x **LC1D40A** (3)
37	66	40	100	**37**	64	37	70	**GV4P80**	40…80	3 x **LC1D40A** (3)
–	–	–	–	**45**	73	44	70	**GV4P80**	40…80	2 x **LC1D50A** **+1 x LC1D40A** (3)
45	80	47	100	–	–	–	–	**GV4P115**	65…115	2 x **LC1D50A** **+1 x LC1D40A** (3)
55	97	58	100	**55**	88	52	70	**GV4P115**	65…115	2 x **LC1D65A** **+1 x LC1D40A** (3)
75	132	78	35	**75**	125	72	35	**GV5P150F**	70…150	**LC3D80**
–	–	–	–	**90**	146	84	35	**GV5P150F**	0…150	**LC3D115**
90 **110**	160 195	95 115	35 35	**110**	178	103	35	**GV5P220F**	100…220	**LC3D115**
–	–	–	–	**132** (4)	215	124	35	**GV5P220F**	100…220	**LC3D150**
132 (4)	230	135	36	–	–	–	–	**GV6P320F**	160...320	**LC3D150**
160	270	158	36	**160**	256	94	35	(4)	–	(4)
220	380	220	36	**250**	401	146	35	(4)	–	(4)
250	430	250	36	**300**	480	175	35	(4)	–	(4)

(1) IrD: current in the motor windings in delta connection.
*(2) The breaking performance of circuit breakers **GV2ME** can be increased by adding a current limiter **GV1L3**, see page B6/21.*
*(3) For mounting 3 contactors **LC1D●●A**, Star-Delta starter kit **LAD9SD3** must be ordered separately, see page B8/46.*
(4) Please refer to Type 2 coordination tables for higher ratings.

AC-3e category

Coordination: Star-Delta with Thermal magnetic circuit breaker + Contactors

1.5 to 90 kW at 400/415 and 440 V: type 2 coordination

Maximum operating rate: LC1D: 30 starts/hour.
Maximum starting time: LC1D: 30 seconds.

Standard power ratings of 3-phase motors 50-60 Hz in category AC-3e								Circuit breaker		Star-delta contactors
400/415 V				440 V				Reference	Setting range of thermal trips	Reference
P	Ie	IrD (7)	Iq	P	Ie	IrD (7)	Iq (1)			
kW	A	A	kA	kW	A	A	kA		A	
1.5	3.6	–	130	**1.5**	3.3	–	130	**GV2P08**	2.5…4	3 x **LC1D09** (2)
2.2	4.9	–	130	**2.2**	4.5	–	130	**GV2P10**	4…6.3	3 x **LC1D18** (3)
–	–	–	–	**3**	5.9	–	130	**GV2P10**	4...6.3	3 x **LC1D18** (3)
3	6.5	–	130	–	–	–	–	**GV2P14**	6…10	3 x **LC1D18** (3)
4	8.5	–	130	**4**	7.8	–	130	**GV2P14**	6…10	3 x **LC1D18** (3)
5.5	11.5	–	50	**5.5**	10.5	–	50	**GV2P16**	9…14	3 x **LC1D25** (3)
–	–	–	–	**7.5**	14.1	–	50	**GV2P16**	9…14	3 x **LC1D25** (3)
7.5	15.5	–	50	**9**	16.9	–	20	**GV2P20**	13…18	3 x **LC1D25** (3)
9	18.1	–	50	**11**	20	–	20	**GV2P21**	17…23	3 x **LC1D25** (3)
11	22	–	50	–	–	–	–	**GV2P22**	20…25	3 x **LC1D25** (3)
15	29	–	50	**15**	27	–	50	**GV3P32**	23…32	3 x **LC1D40A** (4)
18.5	35	–	50	–	–	–	–	**GV3P40**	30…40	2 x **LC1D50A** + **LC1D40A** (3)
–	–	–	–	**18.5**	32	–	50	**GV3P40**	30…40	2 x **LC1D65A** + **LC1D40A** (4)
22	41	–	50	–	–	–	–	**GV3P50**	37…50	2 x **LC1D50A** + **LC1D40A** (3)
–	–	–	–	**22**	39	–	50	**GV3P50**	37…50	2 x **LC1D65A** + **LC1D40A** (4)
30	55	–	50	**30**	51	–	50	**GV3P65**	48…65	2 x **LC1D65A** + **LC1D40A** (4)
37	66	–	100	**37**	73	–	70	**GV4P80S**	40…80	3 x **LC1D80**
–	–	–	–	**45**	73	–	70	**GV4P80S**	40…80	3 x **LC1D65A** (4)
45	80	–	100	–	–	–	–	**GV4P115S**	65…115	3 x **LC1D115** (6)
55	97	–	100	**55**	88	–	70	**GV4P115S**	65…115	3 x **LC1D115** (6)
75	132	78	70	**75**	120	74	65	**GV5P150H**	70…150	3 x **LC1D150** (6)
–	–	–	–	**90**	146	86	65	**GV5P150H**	70…150	3 x **LC1D150** (6)

*(1) The breaking performance of circuit breakers **GV2P** can be increased by adding a current limiter **GV1L3**, please refer to page B6/21.*
*(2) For mounting 3 contactors **LC1D09**, Star-Delta starter kit **LAD91217** must be ordered separately, please refer to page B8/46.*
*(3) For mounting 3 contactors **LC1D18** or **LC1D25**, Star-Delta starter kit **LAD93217** must be ordered separately, please refer to page B8/46.*
*(4) For mounting 3 contactors **LC1D●●A**, Star-Delta starter kit **LAD9SD3** must be ordered separately, please refer to page B8/46.*
*(5) For mounting 3 contactors **LC1D80**, Star-Delta starter kit **LA9D8017** must be ordered separately, please refer to page B8/46.*
(6) For mounting 3 contactors LC1D115 or LC1D150, please refer to page A2/13.
(7) IrD: current in the motor windings in delta connection.

Life Is On Schneider Electric

AC-3e category

Coordination: Star-Delta with Thermal magnetic circuit breaker + Contactors

Contactor: **Maximum operating rate**: 30 starts/hour - **Maximum starting time**: 30 seconds.
The coordination table is for normal starting conditions (Class 10e/ 20e). For other heavy starting applications with long start times, please contact your technical support.
RE17RMMWS timer to be used for Star-Delta starter application.

90 to 250 kW at 400/415 V: type 2 coordination (with TeSys GV5 / GV6 circuit breakers)

Standard power ratings of 3-phase motors 50/60 Hz in category AC-3e			Circuit breaker			Contactor Line (KM2) / Delta (KM3) [3]	Contactor Star (KM1) [3]
400/415 V			Product type [1]	Ir setting [2]	Irm [2]	Product type	
P	Ie	Iq (max)					
kW	A	kA		A	A		
90	160	70	**GV5P220●**	170	1360	**LC1G115**	**LC1D65**
110	195	70	**GV5P220●**	200	1600	**LC1G150**	**LC1D80**
110	195	70	**GV6P320●**	200	1600	**LC1G150**	**LC1D80**
132	230	70	**GV6P320●**	240	1920	**LC1G150**	**LC1D95**
160	280	70	**GV6P320●**	300	2400	**LC1G185**	**LC1G115**
200	350	70	**GV6P500●**	380	3040	**LC1G225**	**LC1G115**
220	380	70	**GV6P500●**	400	3200	**LC1G265**	**LC1G150**
250	430	70	**GV6P500●**	440	3520	**LC1G265**	**LC1G150**

(1) Product type to be completed by replacing the ● with the breaking performance code:

Rated conditional short-circuit (kA)	GV5P220● GV6P320●/GV6P500●	
Breaking performance code	**F**	**H**
400/415 V	36	70

90 to 450 kW at 400/415 V: type 2 coordination (with ComPact NSX / NS circuit breakers)

Standard power ratings of 3-phase motors 50/60 Hz in category AC-3e			Circuit breaker			Contactor Line (KM2) / Delta (KM3) [3]	Contactor Star (KM1) [3]
400/415 V			Product type [1]	Ir setting [2]	Irm [2]	Product type	
P	Ie	Iq (max)					
kW	A	kA		A	A		
90	160	130	**NSX250● + MicroLogic 2.2 M**	170	1360	**LC1G115**	**LC1D65**
110	195	130	**NSX250● + MicroLogic 2.2 M**	200	1600	**LC1G150**	**LC1D80**
110	195	130	**NSX400● + MicroLogic 2.3 M**	200	1600	**LC1G150**	**LC1D80**
132	230	130	**NSX400● + MicroLogic 2.3 M**	240	1920	**LC1G150**	**LC1D95**
160	280	130	**NSX400● + MicroLogic 2.3 M**	300	2400	**LC1G185**	**LC1G115**
200	350	130	**NSX630● + MicroLogic 2.3 M**	380	3040	**LC1G225**	**LC1G115**
220	380	130	**NSX630● + MicroLogic 2.3 M**	400	3200	**LC1G265**	**LC1G150**
250	430	130	**NSX630● + MicroLogic 2.3 M**	440	3520	**LC1G265**	**LC1G150**
300	500	130	**NS800● + MicroLogic 5.0**	480	4480	**LC1G330**	**LC1G185**
335	575	130	**NS800● + MicroLogic 5.0**	640	5120	**LC1G400**	**LC1G225**
355	610	130	**NS800● + MicroLogic 5.0**	640	5120	**LC1G400**	**LC1G225**
400	690	130	**NS800● + MicroLogic 5.0**	720	5760	**LC1G500**	**LC1G265**
450	770	130	**NS1000● + MicroLogic 5.0**	784	6272	**LC1G500**	**LC1G330**

(1) Product type to be completed by replacing the ● with the breaking performance code:

Rated conditional short-circuit (kA)	NSX250●/ NSX400●/ NSX630●					NS800●/ NS1000●
Breaking performance code	**F**	**N**	**H**	**S**	**L**	**L**
400/415 V	36	50	70	100	150	150

(2) This setting is a general guidance, Ir and Irm should be adjusted according to motor characteristics and conditions of use.
(3) Please refer to diagram page A5/41.

AC-3e category

Coordination: Star-Delta with Thermal magnetic circuit breaker + Contactors

Contactor: **Maximum operating rate**: 30 starts/hour - **Maximum starting time**: 30 seconds.
The coordination table is for normal starting conditions (Class 10e/ 20e). For other heavy starting applications with long start times, please contact your technical support.
RE17RMMWS timer to be used for Star-Delta starter application.

110 to 300 kW at 440 V: type 2 coordination (with TeSys GV5 / GV6 circuit breakers)

Standard power ratings of 3-phase motors 50/60 Hz in category AC-3e			Circuit breaker			Contactor Line (KM2) / Delta (KM3) (3)	Contactor Star (KM1) (3)
440 V			Product type (1)	Ir setting (2)	Irm (2)	Product type	
P	Ie	Iq (max)					
kW	A	kA		A	A		
110	177	65	**GV5P220●**	185	1480	**LC1G115**	**LC1D65**
132	209	65	**GV5P220●**	210	1680	**LC1G150**	**LC1D80**
160	255	65	**GV6P320●**	260	2080	**LC1G185**	**LC1G115**
200	318	65	**GV6P320●**	320	2560	**LC1G225**	**LC1G115**
220	343	65	**GV6P500●**	350	2800	**LC1G225**	**LC1G150**
250	390	65	**GV6P500●**	400	3200	**LC1G265**	**LC1G150**
300	466	65	**GV6P500●**	470	3760	**LC1G330**	**LC1G185**

(1) Product type to be completed by replacing the ● with the breaking performance code:

Rated conditional short-circuit (kA)	GV5P220●		GV6P320●/GV6P500●	
Breaking performance code	**F**	**H**	**F**	**H**
440 V	35	65	30	65

110 to 450 kW at 440 V: type 2 coordination (with ComPacT NSX / NS circuit breakers)

Standard power ratings of 3-phase motors 50/60 Hz in category AC-3e			Circuit breaker			Contactor Line (KM2) / Delta (KM3) (3)	Contactor Star (KM1) (3)
440 V			Product type (1)	Ir setting (2)	Irm (2)	Product type	
P	Ie	Iq (max)					
kW	A	kA		A	A		
110	177	130	**NSX250● + MicroLogic 2.2 M**	185	1480	**LC1G115**	**LC1D65**
132	209	130	**NSX250● + MicroLogic 2.2 M**	210	1680	**LC1G150**	**LC1D80**
160	255	130	**NSX400● + MicroLogic 2.3 M**	260	2080	**LC1G185**	**LC1G115**
200	318	130	**NSX400● + MicroLogic 2.3 M**	320	2560	**LC1G225**	**LC1G115**
220	343	130	**NSX630● + MicroLogic 2.3 M**	350	2800	**LC1G225**	**LC1G150**
250	390	130	**NSX630● + MicroLogic 2.3 M**	400	3200	**LC1G265**	**LC1G150**
300	466	130	**NSX630● + MicroLogic 2.3 M**	470	3760	**LC1G330**	**LC1G185**
335	521	130	**NS800● + MicroLogic 5.0**	560	4480	**LC1G330**	**LC1G185**
355	554	130	**NS800● + MicroLogic 5.0**	560	4480	**LC1G400**	**LC1G225**
400	627	130	**NS800● + MicroLogic 5.0**	640	5120	**LC1G400**	**LC1G225**
450	695	130	**NS800● + MicroLogic 5.0**	720	5760	**LC1G500**	**LC1G265**

(1) Product type to be completed by replacing the ● with the breaking performance code:

Rated conditional short-circuit (kA)	NSX250●					NSX400●/ NSX630●					NS800●
Breaking performance code	**F**	**N**	**H**	**S**	**L**	**F**	**N**	**H**	**S**	**L**	**L**
440 V	35	50	65	100	130	30	42	65	100	130	130

(2) This setting is a general guidance, Ir and Irm should be adjusted according to motor characteristics and conditions of use.
(3) Please refer to diagram page A5/41.

Life Is On Schneider Electric

AC-3e category

Coordination: Star-Delta with Thermal magnetic circuit breaker + Contactors

Contactor: **Maximum operating rate**: 30 starts/hour - **Maximum starting time**: 30 seconds.
The coordination table is for normal starting conditions (Class 10e/ 20e). For other heavy starting applications with long start times, please contact your technical support.
RE17RMMWS timer to be used for Star-Delta starter application.

132 to 295 kW at 500 V: type 2 coordination (with TeSys GV5/GV6 circuit breakers)

Standard power ratings of 3-phase motors 50/60 Hz in category AC-3e			Circuit breaker			Contactor Line (KM2) / Delta (KM3) (3)	Contactor Star (KM1) (3)
500 V			Product type (1)	Ir setting (2)	Irm (2)	Product type	
P	Ie	Iq (max)					
kW	A	kA		A	A		
132	184	50	GV5P220●	185	1480	LC1G115	LC1D65
160	224	50	GV6P320●	240	1920	LC1G150	LC1D80
200	280	50	GV6P320●	300	2400	LC1G185	LC1G115
250	344	50	GV6P500●	350	2800	LC1G225	LC1G115
295	405	50	GV6P500●	440	3520	LC1G265	LC1G150

(1) Product type to be completed by replacing the ● with the breaking performance code:

Rated conditional short-circuit (kA)	GV5P220●		GV6P320●/ 500●	
Breaking performance code	F	H	F	H
500 V	30	50	25	50

132 to 425 kW at 500 V: type 2 coordination (with ComPact NSX/NS circuit breakers)

Standard power ratings of 3-phase motors 50/60 Hz in category AC-3e			Circuit breaker			Contactor Line (KM2) / Delta (KM3) (3)	Contactor Star (KM1) (3)
500 V			Product type (1)	Ir setting (2)	Irm (2)	Product type	
P	Ie	Iq (max)					
kW	A	kA		A	A		
132	184	70	NSX250● + MicroLogic 2.2 M	185	1480	LC1G115	LC1D65
160	224	70	NSX400● + MicroLogic 2.3 M (4)	240	1920	LC1G150	LC1D80
200	280	70	NSX400● + MicroLogic 2.3 M (4)	300	2400	LC1G185	LC1G115
250	344	70	NSX630● + MicroLogic 2.3 M (4)	350	2800	LC1G225	LC1G115
295	405	70	NSX630● + MicroLogic 2.3 M (4)	440	3520	LC1G265	LC1G150
375	516	70	NS800● + MicroLogic 5.0	560	4480	LC1G330	LC1G185
425	584	70	NS800● + MicroLogic 5.0	640	5120	LC1G400	LC1G225

(1) Product type to be completed by replacing the ● with the breaking performance code:

Rated conditional short-circuit (kA)	NSX250●					NSX400●/ NSX630●					NS800●
Breaking performance code	F	N	H	S	L	F	N	H	S	L	L
500 V	30	36	50	65	70	25	30	50	65	70	100

(2) This setting is a general guidance, Ir and Irm should be adjusted according to motor characteristics and conditions of use.
(3) Please refer to diagram page A5/41.
(4) Applicable also with MicroLogic 6.2 E-M and 6.3 E-M trip units.

AC-3e category

Coordination: Star-Delta with Thermal magnetic circuit breaker + Contactors

Contactor: **Maximum operating rate**: 30 starts/hour - **Maximum starting time**: 30 seconds.
The coordination table is for normal starting conditions (Class 10e/ 20e). For other heavy starting applications with long start times, please contact your technical support.
RE17RMMWS timer to be used for Star-Delta starter application.

55 to 560 kW at 690 V: type 2 coordination (with ComPact NSX / NS circuit breakers)

Standard power ratings of 3-phase motors 50/60 Hz in category AC-3e			Circuit breaker			Contactor Line (KM2) / Delta (KM3) [3]	Contactor Star (KM1) [3]
690 V			Product type [1]	Ir setting [2]	Irm [2]	Product type	
P	Ie	Iq (max)					
kW	A	kA		A	A		
55	57	75	**NSX100● + MicroLogic 2.2 M**	60	1500	**LC1G115**	**LC1G115**
75	77	75	**NSX100● + MicroLogic 2.2 M**	80	1500	**LC1G115**	**LC1G115**
90	93	75	**NSX250● + MicroLogic 2.2 M**	95	1500	**LC1G150**	**LC1G115**
110	113	75	**NSX250● + MicroLogic 2.2 M**	115	2250	**LC1G185**	**LC1G115**
132	134	75	**NSX250● + MicroLogic 2.2 M**	140	2250	**LC1G225**	**LC1G115**
160	162	75	**NSX250● + MicroLogic 2.2 M**	170	3300	**LC1G225**	**LC1G115**
200	203	75	**NSX250● + MicroLogic 2.2 M**	210	3300	**LC1G265**	**LC1G150**
220	223	75	**NSX400● + MicroLogic 2.3 M**	240	4800	**LC1G330**	**LC1G185**
250	250	75	**NSX400● + MicroLogic 2.3 M**	260	4800	**LC1G400**	**LC1G225**
315	313	75	**NSX630● + MicroLogic 2.3 M**	320	4800	**LC1G400**	**LC1G225**
335	335	75	**NSX630● + MicroLogic 2.3 M**	350	6500	**LC1G500**	**LC1G265**
355	354	75	**NSX630● + MicroLogic 2.3 M**	380	6500	**LC1G500**	**LC1G265**
375	374	75	**NSX630● + MicroLogic 2.3 M**	380	6500	**LC1G630**	**LC1G330**
400	400	75	**NSX630● + MicroLogic 2.3 M**	440	6500	**LC1G630**	**LC1G330**
450	455	75	**NSX630● + MicroLogic 2.3 M**	470	6500	**LC1G630**	**LC1G330**
475	475	75	**NSX630● + MicroLogic 2.3 M**	500	6500	**LC1G630**	**LC1G330**
500	493	75	**NSX630● + MicroLogic 2.3 M**	500	6500	**LC1G630**	**LC1G330**
560	551	75	**NS800● + MicroLogic 5.0**	560	12000	**LC1G800**	**LC1G400**

(1) Product type to be completed by replacing the ● with the breaking performance code:

Rated conditional short-circuit (kA)	NSX100●/ NSX250●/ NSX400●/ NSX630●		NS800●
Breaking performance code	**HB1**	**HB2**	**LB**
690 V	75	100	75

(2) This setting is a general guidance, Ir and Irm should be adjusted according to motor characteristics and conditions of use.
(3) Please refer to diagram page A5/41.

Life Is On Schneider Electric

AC-3e category

Coordination: Star-Delta with Magnetic circuit breaker + Contactors + Thermal overload relay

1.5 to 375 kW at 400/415 and 440 V: type 1 coordination

Maximum operating rate: LC3K: 12 starts/hour; LC3D: 30 starts/hour.
Maximum starting time: LC3K and LC3D: 30 seconds.

Standard power ratings of 3-phase motors 50/60 Hz in category AC-3e								Circuit breaker			Star-Delta contactors	Thermal overload relay	
400/415 V				440 V				Reference	Rating	Irm (2)	Reference	Reference	Setting range
P	Ie	IrD (1)	Iq	P	Ie	IrD (1)	Iq						
kW	A	A	kA	kW	A	A	kA		A	A			A
–	–	–	–	**1.5**	3.3	1.8	50	**GV2LE08**	4	51	**LC3K06**	**LR2K0308**	1.8…2.6
1.5	3.6	2	50	**2.2**	4.5	3	50						
2.2	4.9	3	50	**3**	5.9	3	50	**GV2LE10**	6.3	78	**LC3K06**	**LR2K0310**	2.6…3.7
3	6.5	4	50	–	–	–	–	**GV2LE14**	10	138	**LC3K06**	**LR2K0312**	3.7…5.5
–	–	–	–	**4**	7.8	5	50	**GV2LE10**	6.3	78	**LC3K06**	**LR2K0312**	3.7…5.5
4	8.5	5	50	–	–	–	–	**GV2LE14**	10	138	**LC3K06**	**LR2K0312**	3.7…5.5
–	–	–	–	**5.5**	10.5	6	15	**GV2LE14**	10	138	**LC3K06**	**LR2K0314**	5.5…8
5.5	11.5	6	15	–	–	–	–	**GV2LE16**	14	170	**LC3K06**	**LR2K0314**	5.5…8
–	–	–	–	**7.5**	14.1	8	8	**GV2LE16**	14	170	**LC3K09**	**LR2K0316**	8…11.5
7.5	15.5	9	15	–	–	–	–	**GV2LE20**	18	223	**LC3K09**	**LR2K0316**	8…11.5
–	–	–	–	**9**	16.9	1	8	**GV2LE16**	14	170	**LC3D12A**	**LRD16**	9…13
9	18.1	10	15	–	–	–	–	**GV2LE22**	25	327	**LC3K12**	**LR2K0316**	8…11.5
–	–	–	–	**11**	20	12	8	**GV2LE20**	18	223	**LC3K12**	**LR2K0321**	10…14
11	22	12	15	–	–	–	–	**GV2LE22**	25	327	**LC3K12**	**LR2K0321**	10…14
–	–	–	–	**15**	27	15	6	**GV2LE22**	25	327	**LC3D18A**	**LRD21**	12…18
15	29	16	10	–	–	–	–	**GV2LE32**	32	384	**LC3D18A**	**LRD21**	12…18
18.5	35	20	50	**18.5**	32	19	50	**GV3L40**	40	560	**LC3D18A**	**LRD22**	16…24
22	41	24	50	**22**	39	23	50	**GV3L50**	50	700	**LC3D32A**	**LRD32**	23…32
–	–	–	–	**30**	51	30	50	**GV3L65**	65	910	**LC3D32A**	**LRD32**	23…32
30	55	33	50	–	–	–	–	**GV3L65**	65	910	**LC3D32A**	**LRD35**	30…38
–	–	–	–	**37**	64	37	50	**GV3L65**	65	910	3 x **LC1D40A** (4)	**LRD340**	30…40
37	66	40	100	–	–	–	–	**GV4L80**	80	640	3 x **LC1D40A** (4)	**LRD350**	37…50
–	–	–	–	**37**	64	37	70	**GV4L80**	80	640	3 x **LC1D40A** (4)	**LRD340**	30…40
–	–	–	–	**45**	76	44	70	**GV4L80**	80	800	2 x **LC1D50A** +1 x **LC1D40A** (4)	**LRD350**	37…50
45	80	47	100	–	–	–	–	**GV4L115**	115	805	2 x **LC1D50A** +1 x **LC1D40A** (4)	**LRD350**	37…50
55	97	58	100	**55**	90	52	70	**GV4L115**	115	805	2 x **LC1D50A** +1 x **LC1D40A** (4)	**LRD365**	48…65
–	–	–	–	**75**	125	72	(3)	**NSX160●MA** (3)	150	1200	**LC3D80**	**LRD3363**	63…80
75	132	78	(3)	–	–	–	–	**NSX160●MA** (3)	150	1200	**LC3D80**	**LRD3363**	63…80
–	–	–	–	**90**	146	85	(3)	**NSX160●MA** (3)	150	1200	**LC3D115**	**LRD4365**	80…104
90	160	96	(3)	**110**	178	103	(3)	**NSX250●MA** (3)	220	1760	**LC3D115**	**LRD4365**	80…104
–	–	–	–	**132**	215	125	(3)	**NSX250●MA** (3)	220	1760	**LC3D150**	**LRD4369**	110…140
110 (5)	195	116	(3)	–	–	–	–	**NSX250●MA** (3)	220	1760	**LC3D115**	**LRD4367**	95…120
–	–	–	–	**160** (5)	256	148	(3)	**NSX400● + Micrologic 1.3M** (3)	320	2240	**LC3D150**	**LR9D5369**	90…150
–	–	–	–	**200**	321	186	(3)	(5)	–	–	(5)	(5)	–
132	230	139	(3)	–	–	–	–	(5)	–	–	(5)	(5)	–
160	280	165	(3)	–	–	–	–	(5)	–	–	(5)	(5)	–
200	350	204	(3)	**220**	353	204	(3)	(5)	–	–	(5)	(5)	–
220	388	225	(3)	**250**	401	233	(3)	(5)	–	–	(5)	(5)	–
280	480	278	(3)	–	–	–	–	(5)	–	–	(5)	(5)	–
–	–	–	–	**315**	505	295	(3)	(5)	–	–	(5)	(5)	–
315	540	322	(3)	**355**	518	300	(3)	(5)	–	–	(5)	(5)	–
–	–	–	–	**375**	575	334	(3)	(5)	–	–	(5)	(5)	–

(1) IrD: current in the motor windings in delta connection.
(2) This setting is a general guidance, Ir and Irm should be adjusted according to motor characteristics and conditions of use.
(3) Reference to be completed by replacing the ● with the breaking performance code:

Breaking performance Iq (kA)	NSX100●MA		NSX160●MA, NSX250●MA		NSX400●, NSX630●		NS800●	
400/415 V	36	70	36	70	70	150	70	150
440 V	35	65	35	65	65	130	65	130
Code	**F**	**H**	**F**	**H**	**H**	**L**	**H**	**L**

*(4) For mounting 3 contactors **LC1D●●A**, Star-Delta starter kit **LAD9SD3** must be ordered separately, see page B8/46.*
(5) Please refer to Type 2 coordination tables for higher ratings.

AC-3e category

Coordination: Star-Delta with Magnetic circuit breaker + Contactors + Thermal overload relay

1.5 to 90 kW at 400/415 and 440 V: type 2 coordination

Maximum operating rate: LC3D: 30 starts/hour.
Maximum starting time: LC3D: 30 seconds.

Standard power ratings of 3-phase motors 50/60 Hz in category AC-3e						Circuit breaker			Star-Delta contactors	Thermal overload relay	
400/415 V			440 V			Reference	Rating	Irm (1)	Reference	Reference	Setting range
P	Ie	Iq	P	Ie	Iq						
kW	A	kA	kW	A	kA		A	A			A
1.5	3.6	130	**1.5**	3.3	130	**GV2L08**	4	51	3 x **LC1D09**	**LRD08**	2.5…4
2.2 **3**	4.9 6.5	130 130	**2.2** **3**	4.5 5.9	130 130	**GV2L10**	6.3	78	3 x **LC1D09**	**LRD10**	4…6
–	–	–	**4**	7.8	20	**GV2L14**	10	138	3 x **LC1D18**	**LRD14**	7…10
4	8.5	130	–	–	–	**GV2L14**	10	138	3 x **LC1D18**	**LRD16**	9…13
5.5	11.5	50	**5.5**	10.5	20	**GV2L16**	14	170	3 x **LC1D25**	**LRD16**	9…13
7.5	15.5	50	**7.5**	14.1	20	**GV2L20**	18	223	3 x **LC1D25**	**LRD21**	12…18
–	–	–	**9**	16.9	20	**GV2L22**	25	327	3 x **LC1D25**	**LRD21**	12…18
9 **11**	18.1 22	50 50	– **11**	– 20	– 20	**GV2L22**	25	327	3 x **LC1D25**	**LRD22**	16…24
15	29	50	**15**	27	50	**GV3L32**	32	448	3 x **LC1D40A** (2)	**LRD332**	23…32
18.5	35	50	–	–	–	**GV3L40**	40	560	2 x **LC1D50A** + **LC1D40A** (2)	**LRD340**	30…40
–	–	–	**18.5**	32	50	**GV3L40**	40	560	2 x **LC1D65A** + **LC1D40A** (2)	**LRD340**	30…40
22	41	50	–	–	–	**GV3L50**	50	700	2 x **LC1D50A** + **LC1D40A** (2)	**LRD350**	37…50
–	–	–	**22**	39	50	**GV3L50**	50	700	2 x **LC1D65A** + **LC1D40A** (2)	**LRD350**	37…50
30	55	50	**30**	51	50	**GV3L65**	65	910	2 x **LC1D65A** + **LC1D40A** (2)	**LRD365**	48…65
–	–	–	**37**	64	50	**GV3L65**	65	910	3 x **LC1D80**	**LRD3359**	48…65
37	66	100	–	–	–	**GV4L80**	80	640	3 x **LC1D80**	**LRD3363**	63…80
–	–	–	**45**	76	70	**GV4L80**	80	800	3 x **LC1D80**	**LRD3363**	63…80
45	80	100	–	–	–	**GV4L115**	115	805	3 x **LC1D115**	**LR9D5367**	60…100
–	–	–	**55**	88	70	**GV4L115**	115	920	3 x **LC1D115**	**LR9D5367**	60…100
55	97	100	–	–	–	**GV4L115**	115	920	3 x **LC1D115**	**LR9D5369**	90…150
55	97	(3)	–	–	–	**NSX160●MA** (3)	150	1200	3 x **LC1D115**	**LR9D5369**	90…150
–	–	–	**75**	120	(3)	**NSX160●MA** (3)	150	1200	2 x **LC1D150**	**LR9D5369**	90…150
75	132	(3)	**90**	146	(3)	**NSX160●MA** (3)	150	1200	2 x **LC1D150**	**LR9D5369**	90…150

(1) Irm: setting current of the magnetic trip.
*(2) For mounting 3 contactors **LC1D●●A**, Star-Delta starter kit **LAD9SD3** must be ordered separately, see page B8/46.*
(3) Reference to be completed by replacing the ● with the breaking performance code:

Breaking performance Iq (kA)	NSX100●MA		NSX160●MA, NSX250●MA		NSX400●, NSX630●	
400/415 V	36	70	36	70	70	150
440 V	35	65	35	65	65	130
Code	**F**	**H**	**F**	**H**	**H**	**L**

Life Is On Schneider Electric

AC-3e category

Coordination: Star-Delta with Magnetic circuit breaker + Contactors + Overload relay

Contactor: **Maximum operating rate**: 30 starts/hour - **Maximum starting time**: 30 seconds.
The coordination table is for normal starting conditions (Class 10e/ 20e). For other heavy starting applications with long start times, please contact your technical support.
RE17RMMWS timer to be used for Star-Delta starter application.

90 to 450 kW at 400/415 V: type 2 coordination (with ComPacT NSX/NS circuit breakers and LR9G overload relays)

Standard power ratings of 3-phase motors 50/60 Hz in category AC-3e			Circuit breaker		Contactor Line (KM2) / Delta (KM3) (3)	Contactor Star (KM1) (3)	Electronic thermal overload relay	
400/415 V			Product type (1)	Irm (2)	Product type		Product type	Ir setting (2)
P	Ie	Iq (max)						
kW	A	kA		A				A
90	160	130	NSX250• + MA	1980	LC1G115	LC1D65	LR9G115	92
110	195	130	NSX250• + MA	1980	LC1G150	LC1D80	LR9G225	113
110	195	130	NSX400• + MicroLogic 1.3 M	1920	LC1G150	LC1D80	LR9G225	113
132	230	130	NSX400• + MicroLogic 1.3 M	1920	LC1G150	LC1D80	LR9G225	133
160	280	130	NSX400• + MicroLogic 1.3 M	2560	LC1G185	LC1G115	LR9G225	162
200	350	130	NSX630• + MicroLogic 1.3 M	3000	LC1G225	LC1G150	LR9G225	202
220	380	130	NSX630• + MicroLogic 1.3 M	3500	LC1G265	LC1G150	LR9G500	219
250	430	130	NSX630• + MicroLogic 1.3 M	3500	LC1G265	LC1G150	LR9G500	248
300	500	130	NS800• + MicroLogic 5.0 LR OFF	4800	LC1G330	LC1G185	LR9G500	266
335	575	130	NS800• + MicroLogic 5.0 LR OFF	4800	LC1G400	LC1G225	LR9G500	332
355	610	130	NS800• + MicroLogic 5.0 LR OFF	5600	LC1G400	LC1G225	LR9G500	352
400	690	130	NS800• + MicroLogic 5.0 LR OFF	5600	LC1G500	LC1G265	LR9G500	362
450	695	130	NS800• + MicroLogic 5.0 LR OFF	6400	LC1G500	LC1G265	LR9G500	401

(1) Product type to be completed by replacing the • with the breaking performance code:

Rated conditional short-circuit (kA)	NSX250•/ NSX400•/ NSX630•					NS800•
Breaking performance code	F	N	H	S	L	L
400/415 V	36	50	70	100	130	150

110 to 355 kW at 440 V: type 2 coordination (with ComPacT NSX/NS circuit breakers and LR9G overload relays)

Standard power ratings of 3-phase motors 50/60 Hz in category AC-3e			Circuit breaker		Contactor Line (KM2) / Delta (KM3) (3)	Contactor Star (KM1) (3)	Electronic thermal overload relay	
440 V			Product type (1)	Irm (2)	Product type		Product type	Ir setting (2)
P	Ie	Iq (max)						
kW	A	kA		A				A
110	177	130	NSX250• + MA	1980	LC1G115	LC1D65	LR9G115	102
132	209	130	NSX250• + MA	1980	LC1G150	LC1D80	LR9G225	121
160	255	130	NSX400• + MicroLogic 1.3 M	2240	LC1G185	LC1D95	LR9G225	147
200	318	130	NSX400• + MicroLogic 1.3 M	2560	LC1G225	LC1G115	LR9G225	184
220	343	130	NSX630• + MicroLogic 1.3 M	3000	LC1G225	LC1G150	LR9G225	198
250	390	130	NSX630• + MicroLogic 1.3 M	3500	LC1G265	LC1G150	LR9G500	225
300	466	130	NSX630• + MicroLogic 1.3 M	4000	LC1G330	LC1G185	LR9G500	269
335	521	130	NS800• + MicroLogic 5.0 LR OFF	4800	LC1G330	LC1G185	LR9G500	301
355	554	130	NS800• + MicroLogic 5.0 LR OFF	4800	LC1G400	LC1G225	LR9G500	320

(1) Product type to be completed by replacing the • with the breaking performance code:

Rated conditional short-circuit (kA)	NSX250•					NSX400•/ NSX630•				NS800•
Breaking performance code	F	N	H	S	L	F	N	S	L	L
440 V	35	50	65	100	130	30	42	100	130	130

(2) This setting is a general guidance, Ir and Irm should be adjusted according to motor characteristics and conditions of use.
(3) Please refer to diagram page A5/41.

AC-3e category

Coordination: Star-Delta with Magnetic circuit breaker + Contactors + Overload relay

Contactor: **Maximum operating rate**: 30 starts/hour - **Maximum starting time**: 30 seconds.
The coordination table is for normal starting conditions (Class 10e/ 20e). For other heavy starting applications with long start times, please contact your technical support.
RE17RMMWS timer to be used for Star-Delta starter application.

132 to 425 kW at 500 V: type 2 coordination (with ComPacT NSX / NS circuit breakers and LR9G overload relays)

Standard power ratings of 3-phase motors 50/60 Hz in category AC-3e			Circuit breaker		Contactor Line (KM2) / Delta (KM3) (3)	Contactor Star (KM1) (3)	Electronic thermal overload relay	
500 V			Product type (1)	Irm (2)	Product type		Product type	Ir setting (2)
P	Ie	Iq (max)						
kW	A	kA		A				A
132	184	70	**NSX400• + MicroLogic 1.3 M**	1600	**LC1G115**	**LC1D65**	**LR9G225**	106
160	224	70	**NSX400• + MicroLogic 1.3 M**	1920	**LC1G150**	**LC1D80**	**LR9G225**	129
200	280	70	**NSX400• + MicroLogic 1.3 M**	2560	**LC1G185**	**LC1G115**	**LR9G225**	162
250	344	70	**NSX630• + MicroLogic 1.3 M**	3000	**LC1G225**	**LC1G150**	**LR9G225**	199
295	405	70	**NSX630• + MicroLogic 1.3 M**	3500	**LC1G265**	**LC1G150**	**LR9G500**	234
375	516	70	**NS800• + MicroLogic 5.0**	4800	**LC1G330**	**LC1G185**	**LR9G500**	298
425	584	70	**NS800• + MicroLogic 5.0**	4800	**LC1G400**	**LC1G185**	**LR9G500**	337

(1) Product type to be completed by replacing the • with the breaking performance code:

Rated conditional short-circuit (kA)	NSX400•/ NSX630•					NS800•
Breaking performance code	**F**	**N**	**H**	**S**	**L**	**L**
500 V	25	30	50	65	70	100

(2) This setting is a general guidance, Ir and Irm should be adjusted according to motor characteristics and conditions of use.
(3) Please refer to diagram page A5/41.

Coordination and standards

160 to 500 kW at 690 V: type 2 coordination (with ComPact NSX circuit breakers and LR9G overload relays)

Standard power ratings of 3-phase motors 50/60 Hz in category AC-3e			Circuit breaker		Contactor Line (KM2) / Delta (KM3)	Contactor Star (KM1) (3)	Thermal overload relay	
690 V			Product type (1)	Irm (2)	Product type		Product type	Ir setting (2)
P	Ie	Iq (max)						
kW	A	kA		A				A
160	162	75	**NSX250• + MA**	3080	**LC1G115**	**LC1D65**	**LR9G115**	94
200	203	75	**NSX250• + MA**	3080	**LC1G150**	**LC1D80**	**LR9G225**	117
220	223	75	**NSX400• + MicroLogic 1.3 M**	4800	**LC1G150**	**LC1D80**	**LR9G225**	129
250	250	75	**NSX400• + MicroLogic 1.3 M**	4800	**LC1G185**	**LC1G115**	**LR9G225**	144
315	313	75	**NSX630• + MicroLogic 1.3 M**	6500	**LC1G225**	**LC1G115**	**LR9G225**	181
335	335	75	**NSX630• + MicroLogic 1.3 M**	6500	**LC1G225**	**LC1G150**	**LR9G225**	193
355	354	75	**NSX630• + MicroLogic 1.3 M**	6500	**LC1G225**	**LC1G150**	**LR9G225**	204
375	374	75	**NSX630• + MicroLogic 1.3 M**	6500	**LC1G265**	**LC1G150**	**LR9G225**	216
400	400	75	**NSX630• + MicroLogic 1.3 M**	6500	**LC1G265**	**LC1G150**	**LR9G500**	231
450	455	75	**NSX630• + MicroLogic 1.3 M**	6500	**LC1G330**	**LC1G185**	**LR9G500**	263
475	475	75	**NSX630• + MicroLogic 1.3 M**	6500	**LC1G330**	**LC1G185**	**LR9G500**	274
500	493	75	**NSX630• + MicroLogic 1.3 M**	6500	**LC1G330**	**LC1G185**	**LR9G500**	285

(1) Product type to be completed by replacing the • with the breaking performance code:

Rated conditional short-circuit (kA)	NSX100•/ NSX250•/ NSX400•/ NSX630•	
Breaking performance code	**HB1**	**HB2**
690 V	75	100

(2) This setting is a general guidance, Ir and Irm should be adjusted according to motor characteristics and conditions of use.
(3) Please refer to diagram page A5/41.

Life Is On Schneider Electric

Coordination: Star-Delta motor starter - Common circuit diagrams

TeSys Giga star-delta motor 'Power' circuit diagram

Thermal magnetic circuit breaker + contactors

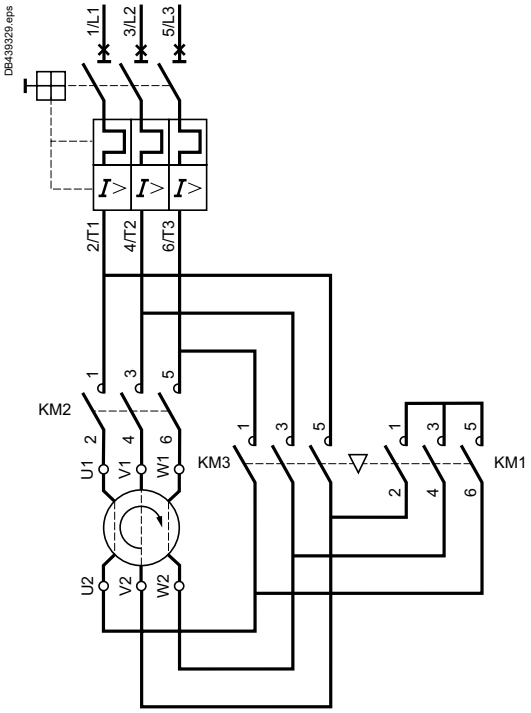

Magnetic circuit breaker + contactors + overload relay

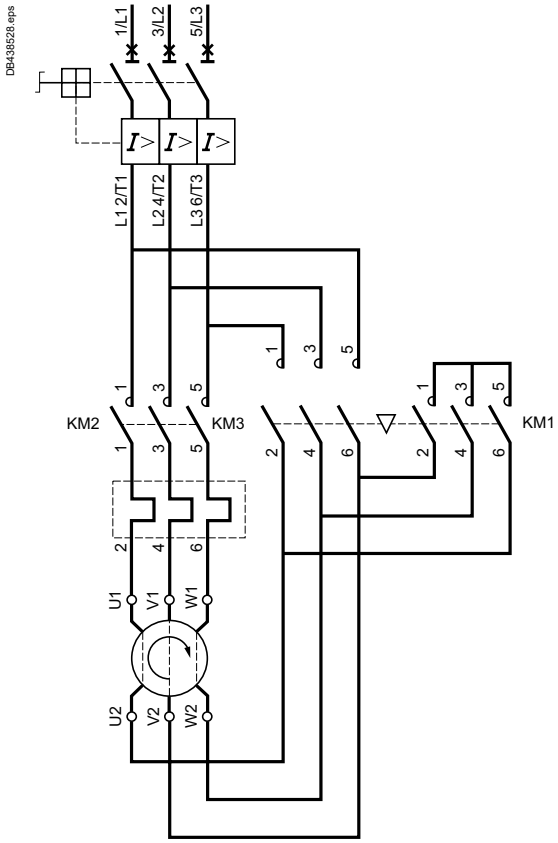

TeSys Giga star-delta Motor 'Control' circuit diagram

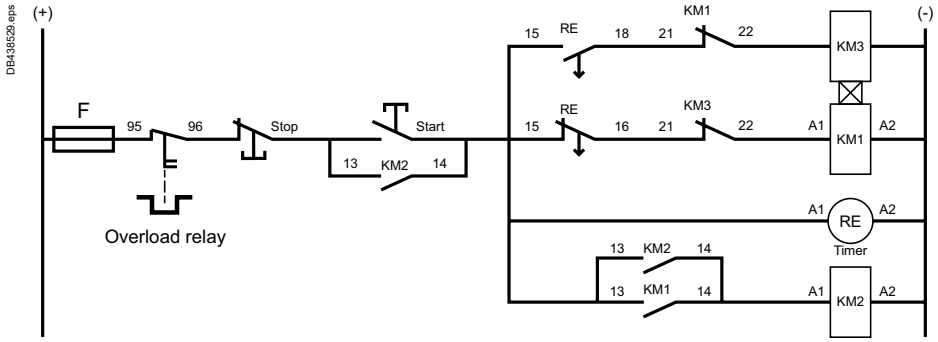

Recommended timing relay (RE): Zelio Timer ref. **RE17RMMWS** (12...240 V AC/DC 50/60 Hz – 8 A AC/DC contacts)

Resistive load protection and control
Coordination: Fuses (NFC, DIN type gG) + Contactors

250 to 1050 A up to 690 V: type 2 coordination (with NFC, DIN, type gG fuses)					
Current ratings of 3-phase loads 50/60 Hz in category AC-1		Switch-disconnector	gG fuse		Contactor
Up to 690 V, temperature ≤ 40 °C		Product type	Size	Rating	Product type
Ie	Iq (max)				
A	kA			A	
250	80	**GS●QQ**	2	315	**LC1G115**
275	80	**GS●QQ**	2	315	**LC1G150**
305	80	**GS●QQ**	2	315	**LC1G185**
330	80	**GS●QQ**	2	400	**LC1G225**
385	80	**GS●QQ**	2	400	**LC1G265**
440	80	**GS●S**	3	500	**LC1G330**
550	80	**GS●S**	3	630	**LC1G400**
700	80	**GS●V**	4	800	**LC1G500**
1000	80	**GS●V**	4	1000	**LC1G630**
1050	80	**GS●V**	4	1250	**LC1G800**

Life Is On Schneider Electric

Resistive load protection and control
Coordination: Thermal magnetic circuit breakers + Contactors

275 to 1000 A up to 690 V: type 2 coordination (with LC1G and ComPacT NSX or NS circuit breakers)

Current ratings of 3-phase loads 50/60 Hz in category AC-1		Circuit breaker		Contactor
Up to 690 V, temperature ≤ 40 °C		Product type [1]	In	Product type
Ie	Iq (max)			
A	kA		A	
275	100	**NSX400● + MicroLogic 2.3**	400	**LC1G150**
305	100	**NSX400● + MicroLogic 2.3**	400	**LC1G185**
330	100	**NSX400● + MicroLogic 2.3**	400	**LC1G225**
385	100	**NSX400● + MicroLogic 2.3**	400	**LC1G265**
440	100	**NSX630● + MicroLogic 2.3**	630	**LC1G330**
550	100	**NSX630● + MicroLogic 2.3**	630	**LC1G400**
700	75	**NS800● + MicroLogic 5.0**	800	**LC1G500**
1000	100 [2]	**NS1000● + MicroLogic 5.0**	1000	**LC1G630**

(1) Product type to be completed by replacing the ● with the breaking performance code:

Rated conditional short-circuit (kA)	NSX400●/ NSX630●								NS800●/NS1000●	
Breaking performance code	**F**	**N**	**H**	**S**	**L**	**R**	**HB1**	**HB2**	**L**	**LB**
400 V	36	50	70	100	150	200	-	-	150	200
440 V	30	42	65	90	130	200	-	-	130	200
500 V	25	30	50	65	70	80	85	100	100	100
690 V	10	10	20	25	35	45	75	100	-	75

(2) Up to 500 V AC.

690 V - Type 1 or 2 coordination with fuses			
Applications with 3-phase motors 50-60 Hz in category AC-3e	**aM fuses**	**Standard Starters SIL Starters Power Interface Modules**	
690 V	**Rating**	**References**	**Setting range**
Iq			
kA	**A**		**A**
80	≤10	**TPRST009** **TPRSS009** **TPRPM009**	0.18-9
	≤25	**TPRST025** **TPRSS025** **-**	0.5-25
	≤40	**TPRST038** **TPRSS038** **TPRPM038**	0.76-38
	≤80	**TPRST065** **TPRSS065** **-**	3.25-65
	≤80	**TPRST080** **TPRSS080** **TPRPM080**	4-80

Life Is On Schneider Electric

0.06 to 22 kW at 230 V: Type 1 coordination

Applications power ratings of 3-phase motors 50-60 Hz in category AC-3e			Circuit breaker (Trip class 5 to 15)	Standard Starters SIL Starters Power Interface Modules	
230 V			References	References	Setting range
P	Ie	Iq			
kW	A	kA			A
0.06	0.35	100	**GV2L03**	**TPRST009** **TPRSS009** **TPRPM009**	0.18-9
0.09	0.52	100	**GV2L04**	**TPRST009** **TPRSS009** **TPRPM009**	0.18-9
0.12	0.7	100	**GV2L05**	**TPRST009** **TPRSS009** **TPRPM009**	0.18-9
0.18	1	100	**GV2L06**	**TPRST009** **TPRSS009** **TPRPM009**	0.18-9
0.25	1.5	100	**GV2L06**	**TPRST009** **TPRSS009** **TPRPM009**	0.18-9
0.37	1.9	100	**GV2L07**	**TPRST009** **TPRSS009** **TPRPM009**	0.18-9
0.55	2.6	100	**GV2L08**	**TPRST009** **TPRSS009** **TPRPM009**	0.18-9
0.75	3.3	100	**GV2L08**	**TPRST009** **TPRSS009** **TPRPM009**	0.18-9
1.1	4.7	100	**GV2L10**	**TPRST009** **TPRSS009** **TPRPM009**	0.18-9
1.5	6.3	100	**GV2L14**	**TPRST009** **TPRSS009** **TPRPM009**	0.18-9
2.2	8.5	100	**GV2L14**	**TPRST009** **TPRSS009** **TPRPM009**	0.18-9
3	11.3	100	**GV2L16**	**TPRST025** **TPRSS025** **TPRPM038**	0.5-25 / 0.76-38
4	15	100	**GV2L20**	**TPRST025** **TPRSS025** **TPRPM038**	0.5-25 / 0.76-38
5.5	20	50	**GV2L22**	**TPRST025** **TPRSS025** **TPRPM038**	0.5-25 / 0.76-38
7.5	27	50	**GV2L32**	**TPRST038** **TPRSS038** **TPRPM038**	0.76-38
9	32	100	**GV3L40**	**TPRST038** **TPRSS038** **TPRPM038**	0.76-38
11	38	100	**GV3L40**	**TPRST065** **TPRSS065** **TPRPM080**	3.25-65 / 4-80
15	51	100	**GV3L65**	**TPRST065** **TPRSS065** **TPRPM080**	3.25-65 / 4-80
18.5	61	100	**GV3L65**	**TPRST065** **TPRSS065** **TPRPM080**	3.25-65 / 4-80
22	72	100	**GV3L73**	**TPRPM080**	4-80

AC-3e category

IEC - Type 2 coordination with circuit breakers - 230 V

0.06 to 18.5 kW at 230 V: Type 2 coordination

Applications power ratings of 3-phase motors 50-60 Hz in category AC-3e			Circuit breaker (Trip class 5 to 15)	Standard Starters SIL Starters	
230 V			References	References	Setting range
P	Ie	Iq			
kW	A	kA			A
0.06	0.35	100	**GV2L03**	**TPRST009** **TPRSS009**	0.18-9
0.09	0.52	100	**GV2L04**	**TPRST009** **TPRSS009**	0.18-9
0.12	0.7	100	**GV2L05**	**TPRST009** **TPRSS009**	0.18-9
0.18	1	100	**GV2L06**	**TPRST009** **TPRSS009**	0.18-9
0.25	1.5	100	**GV2L06**	**TPRST009** **TPRSS009**	0.18-9
0.37	1.9	100	**GV2L07**	**TPRST009** **TPRSS009**	0.18-9
0.55	2.6	100	**GV2L08**	**TPRST009** **TPRSS009**	0.18-9
0.75	3.3	100	**GV2L08**	**TPRST025** **TPRSS025**	0.5-25
1.1	4.7	100	**GV2L10**	**TPRST025** **TPRSS025**	0.5-25
1.5	6.3	100	**GV2L14**	**TPRST025** **TPRSS025**	0.5-25
2.2	8.5	100	**GV2L14**	**TPRST025** **TPRSS025**	0.5-25
3	11.3	100	**GV2L16**	**TPRST025** **TPRSS025**	0.5-25
4	15	100	**GV2L20**	**TPRST025** **TPRSS025**	0.5-25
5.5	20	50	**GV2L22**	**TPRST025** **TPRSS025**	0.5-25
7.5	27	50	**GV2L32**	**TPRST038** **TPRSS038**	0.76-38
9	32	100	**GV3L40**	**TPRST038** **TPRSS038**	0.76-38
11	38	100	**GV3L40**	**TPRST065** **TPRSS065**	3.25-65
15	51	100	**GV3L65**	**TPRST065** **TPRSS065**	3.25-65
18.5	61	100	**GV3L65**	**TPRST065** **TPRSS065**	3.25-65

Life Is On Schneider Electric

AC-3e category

IEC - Type 1 coordination with circuit breakers - 400/415 - 440 - 500 V

0.06 to 37 kW at 400/415 - 440 - 500 V: Type 1 coordination

Applications power ratings of 3-phase motors 50-60 Hz in category AC-3e									Circuit breaker (Trip class 5 to 15)	Standard Starters SIL Starters Power Interface Modules	
400/415 V			440 V			500 V			References	References	Setting range
P	Ie	Iq	P	Ie	Iq	P	Ie	Iq			
kW	A	kA	kW	A	kA	kW	A	kA			A
0.06	0.2	100	0.06	0.18	100	-	-	-	GV2L03	TPRST009 TPRSS009 TPRPM009	0.18-9
0.09	0.3	100	0.09	0.27	100	-	-	-			
0.12	0.44	100	0.12	0.4	100	-	-	-	GV2L04	TPRST009 TPRSS009 TPRPM009	0.18-9
-	-	-	0.18	0.55	100	-	-	-			
0.18	0.6	100	-	-	-	-	-	-	GV2L05	TPRST009 TPRSS009 TPRPM009	0.18-9
0.25	0.85	100	0.25	0.77	100	-	-	-			
-	-	-	-	-	-	0.37	0.88	100			
0.37	1.1	100	0.37	1	100	-	-	-	GV2L06	TPRST009 TPRSS009 TPRPM009	0.18-9
0.55	1.5	100	0.55	1.4	100	0.55	1.2	100			
-	-	-	-	-	-	0.75	1.5	100	GV2L07	TPRST009 TPRSS009 TPRPM009	0.18-9
0.75	1.9	100	0.75	1.7	100	-	-	-			
-	-	-	-	-	-	1.1	2.2	100			
1.1	2.7	100	1.1	2.4	100	-	-	-	GV2L08	TPRST009 TPRSS009 TPRPM009	0.18-9
1.5	3.6	100	1.5	3.3	100	1.5	2.9	100			
2.2	4.9	100	2.2	4.5	100	2.2	3.9	100	GV2L10	TPRST009 TPRSS009 TPRPM009	0.18-9
-	-	-	-	-	-	3	5.2	100			
3	6.5	100	3	5.9	100	-	-	-	GV2L14	TPRST009 TPRSS009 TPRPM009	0.18-9
4	8.5	100	4	7.7	20	4	6.8	10			
-	-	-	-	-	-	5.5	9.2	10			
5.5	11.5	50	5.5	10.5	20	-	-	-	GV2L16	TPRST025 TPRSS025 TPRPM038	0.5-25 / 0.76-38
-	-	-	-	-	-	7.5	12.4	10			
7.5	15.5	50	7.5	14.1	20	-	-	-	GV2L20	TPRST025 TPRSS025 TPRPM038	0.5-25 / 0.76-38
-	-	-	9	16.5	20	9	13.9	10			
9	18.1	50	-	-	-	-	-	-	GV2L22	TPRST025 TPRSS025 TPRPM038	0.5-25 / 0.76-38
11	22	50	11	20	20	11	17.6	10			
-	-	-	-	-	-	15	23	10			
15	29	50	15	26.4	20	-	-	-	GV2L32	TPRST038 TPRSS038 TPRPM038	0.76-38
-	-	-	-	-	-	18.5	28	10			
18.5	35	50	18.5	31.8	50	-	-	-	GV3L40	TPRST065 TPRSS065 TPRPM080	3.25-65 / 4-80
-	-	-	-	-	-	22	33	12			
22	41	50	22	37.3	50	-	-	-	GV3L50	TPRST065 TPRSS065 TPRPM080	3.25-65 / 4-80
-	-	-	-	-	-	30	44	12			
30	55	50	30	50	50	-	-	-	GV3L65	TPRST065 TPRSS065 TPRPM080	3.25-65 / 4-80
-	-	-	37	60	50	37	53	12			
37	66	50	-	-	-	-	-	-	GV3L73	TPRST065 TPRSS065 TPRPM080	3.25-65 / 4-80

AC-3e category

IEC - Type 2 coordination with circuit breakers - 400/415 - 440 - 500 V

0.06 to 37 kW at 400/415 - 440 - 500 V: Type 2 coordination

Applications power ratings of 3-phase motors 50-60 Hz in category AC-3e									Circuit breaker (Trip class 5 to 15)	Standard Starters SIL Starters	
400/415 V			440 V			500 V			References	References	Setting range
P	Ie	Iq	P	Ie	Iq	P	Ie	Iq			
kW	A	kA	kW	A	kA	kW	A	kA			A
0.06	0.2	100	0.06	0.18	100	-	-	-	GV2L03	TPRST009 TPRSS009	0.18-9
0.09	0.3	100	0.09	0.27	100	-	-	-			
0.12	0.44	100	0.12	0.4	100	-	-	-	GV2L04	TPRST009 TPRSS009	0.18-9
-	-	-	0.18	0.55	100	-	-	-			
0.18	0.6	100	-	-	-	-	-	-	GV2L05	TPRST009 TPRSS009	0.18-9
0.25	0.85	100	0.25	0.77	100	-	-	-			
-	-	-	-	-	-	0.37	0.88	100			
0.37	1.1	100	0.37	1	100	-	-	-	GV2L06	TPRST009 TPRSS009	0.18-9
0.55	1.5	100	0.55	1.4	100	0.55	1.2	100			
-	-	-	-	-	-	0.75	1.5	100	GV2L07	TPRST009 TPRSS009	0.18-9
0.75	1.9	100	0.75	1.7	100	-	-	-			
-	-	-	-	-	-	1.1	2.2	100			
-	-	-	1.1	2.4	100	-	-	-	GV2L08	TPRST009 TPRSS009	0.18-9
-	-	-	-	-	-	1.5	2.9	100			
1.1	2.7	100	-	-	-	-	-	-	GV2L08	TPRST025 TPRSS025	0.5-25
1.5	3.6	100	1.5	3.3	100	-	-	-			
2.2	4.9	100	2.2	4.5	100	2.2	3.9	100	GV2L10	TPRST025 TPRSS025	0.5-25
-	-	-	-	-	-	3	5.2	100			
3	6.5	100	3	5.9	100	-	-	-	GV2L14	TPRST025 TPRSS025	0.5-25
4	8.5	100	4	7.7	20	4	6.8	10			
-	-	-	-	-	-	5.5	9.2	10			
5.5	11.5	50	5.5	10.5	20	-	-	-	GV2L16	TPRST025 TPRSS025	0.5-25
-	-	-	-	-	-	7.5	12.4	10			
7.5	15.5	50	7.5	14.1	20	-	-	-	GV2L20	TPRST025 TPRSS025	0.5-25
-	-	-	9	16.5	20	9	13.9	10			
9	18.1	50	-	-	-	-	-	-	GV2L22	TPRST025 TPRSS025	0.5-25
11	22	50	11	20	20	11	17.6	10			
-	-	-	-	-	-	15	23	10			
15	29	50	15	26.4	20	-	-	-	GV2L32	TPRST038 TPRSS038	0.76-38
-	-	-	-	-	-	18.5	28	10			
18.5	35	50	18.5	31.8	50	-	-	-	GV3L40	TPRST065 TPRSS065	3.25-65
-	-	-	-	-	-	22	33	12			
22	41	50	22	37.3	50	-	-	-	GV3L50	TPRST065 TPRSS065	3.25-65
-	-	-	-	-	-	30	44	12			
30	55	50	30	50	50	-	-	-	GV3L65	TPRST065 TPRSS065	3.25-65
-	-	-	37	60	50	37	53	12			
37	66	50	-	-	-	-	-	-	GV3L73	TPRST065 TPRSS065	3.25-65

Life Is On Schneider Electric

AC-3e category

IEC - Type 1 coordination with circuit breakers - 690 V

0.37 to 37 kW at 690 V: Type 1 coordination

Applications power ratings of 3-phase motors 50-60 Hz in category AC-3e			Circuit breaker (Trip class 5 to 15)	Standard Starters SIL Starters Power Interface Modules	
690 V			References	References	Setting range
P	Ie	Iq			
kW	A	kA			A
0.37	0.64	100	**GV2L05**	**TPRST009** **TPRSS009** **TPRPM009**	0.18-9
0.55	0.87	4	**GV2L05**	**TPRST009** **TPRSS009** **TPRPM009**	0.18-9
0.75	1.1	4	**GV2L06**	**TPRST009** **TPRSS009** **TPRPM009**	0.18-9
1.1	1.6	4	**GV2L07**	**TPRST009** **TPRSS009** **TPRPM009**	0.18-9
1.5	2.1	4	**GV2L07**	**TPRST009** **TPRSS009** **TPRPM009**	0.18-9
2.2	2.8	4	**GV2L08**	**TPRST009** **TPRSS009** **TPRPM009**	0.18-9
3	3.8	4	**GV2L08**	**TPRST009** **TPRSS009** **TPRPM009**	0.18-9
4	4.9	4	**GV2L10**	**TPRST009** **TPRSS009** **TPRPM009**	0.18-9
5.5	6.7	4	**GV2L14**	**TPRST009** **TPRSS009** **TPRPM009**	0.18-9
7.5	8.9	4	**GV2L14**	**TPRST025** **TPRSS025** **TPRPM038**	0.5-25 / 0.76-38
9	10.5	4	**GV2L16**	**TPRST025** **TPRSS025** **TPRPM038**	0.5-25 / 0.76-38
11	12.8	4	**GV2L16**	**TPRST025** **TPRSS025** **TPRPM038**	0.5-25 / 0.76-38
15	17	4	**GV2L20**	**TPRST025** **TPRSS025** **TPRPM038**	0.5-25 / 0.76-38
18.5	21	4	**GV2L22**	**TPRST038** **TPRSS038** **TPRPM038**	0.76-38
22	24	4	**GV2L22**	**TPRST065** **TPRSS065** **TPRPM080**	3.25-65 / 4-80
30	32	6	**GV3L40**	**TPRST065** **TPRSS065** **TPRPM080**	3.25-65 / 4-80
37	39	6	**GV3L50**	**TPRST065** **TPRSS065** **TPRPM080**	3.25-65 / 4-80

AC-3e category

IEC - Type 2 coordination with circuit breakers - 690 V

0.37 to 37 kW at 690 V: Type 2 coordination

Applications power ratings of 3-phase motors 50-60 Hz in category AC-3e			Circuit breaker (Trip class 5 to 15)	Standard Starters SIL Starters	
690 V			References	References	Setting range
P	Ie	Iq			
kW	A	kA			A
0.37	0.64	100	**GV2L05**	**TPRST009** **TPRSS009**	0.18-9
0.55	0.87	4	**GV2L05**	**TPRST009** **TPRSS009**	0.18-9
0.75	1.1	4	**GV2L06**	**TPRST009** **TPRSS009**	0.18-9
1.1	1.6	4	**GV2L07**	**TPRST009** **TPRSS009**	0.18-9
1.1	1.6	50	**GV2L07 + LA9LB920**	**TPRST025** **TPRSS025**	0.5-25
1.5	2.1	4	**GV2L07**	**TPRST009** **TPRSS009**	0.18-9
1.5	2.1	50	**GV2L07 + LA9LB920**	**TPRST025** **TPRSS025**	0.5-25
2.2	2.8	4	**GV2L08**	**TPRST025** **TPRSS025**	0.5-25
2.2	2.8	50	**GV2L08 + LA9LB920**	**TPRST025** **TPRSS025**	0.5-25
3	3.8	4	**GV2L08**	**TPRST025** **TPRSS025**	0.5-25
3	3.8	50	**GV2L08 + LA9LB920**	**TPRST025** **TPRSS025**	0.5-25
4	4.9	4	**GV2L10**	**TPRST025** **TPRSS025**	0.5-25
4	4.9	50	**GV2L10 + LA9LB920**	**TPRST025** **TPRSS025**	0.5-25
5.5	6.7	4	**GV2L14**	**TPRST025** **TPRSS025**	0.5-25
5.5	6.7	50	**GV2L14 + LA9LB920**	**TPRST025** **TPRSS025**	0.5-25
7.5	8.9	4	**GV2L14**	**TPRST025** **TPRSS025**	0.5-25
7.5	8.9	50	**GV2L14 + LA9LB920**	**TPRST025** **TPRSS025**	0.5-25
9	10.5	4	**GV2L16**	**TPRST025** **TPRSS025**	0.5-25
11	12.8	4	**GV2L16**	**TPRST025** **TPRSS025**	0.5-25
11	12.8	3	**GV2L16 + LA9LB920**	**TPRST038** **TPRSS038**	0.76-38
15	17	4	**GV2L20**	**TPRST025** **TPRSS025**	0.5-25
15	17	3	**GV2L22 + LA9LB920**	**TPRST038** **TPRSS038**	0.76-38
18.5	21	4	**GV2L22**	**TPRST038** **TPRSS038**	0.76-38
18.5	21	3	**GV3L25 + LA9LB920**	**TPRST065** **TPRSS065**	3.25-65
22	24	4	**GV2L22**	**TPRST065** **TPRSS065**	3.25-65
22	24	3	**GV2L32 + LA9LB920**	**TPRST065** **TPRSS065**	3.25-65
30	32	6	**GV3L40**	**TPRST065** **TPRSS065**	3.25-65
37	39	6	**GV3L50**	**TPRST065** **TPRSS065**	3.25-65

Life Is On Schneider Electric

UL - SCCR Ratings

Short Circuit Current Ratings (SCCR)

UL File E39281 and File E48539 Suitable for use on a circuit delivering not more than:								Standard Starters SIL Starters Power Interface Modules	
High SCCR						Standard SCCR			
Max Voltage 600 V Class J Fuse (1)		Max Voltage 480 V Circuit Breaker		Max Voltage 600 V Circuit Breaker		Max Voltage 600 V Circuit Breaker or Fuse		References	Setting range
SCCR	Maximum Amperage	SCCR	Maximum Amperage	SCCR	Maximum Amperage	SCCR	Maximum Amperage		
kA	A	kA	A	kA	A	kA	A		A
100	25	85	35	50	35	5	35	**TPRST009** **TPRSS009** **TPRPM009**	0.18-9
100	60	85	60	50	60	5	100	**TPRST025** **TPRSS025**	0.5-25
100	100	85	60	50	60	5	125	**TPRST038** **TPRSS038** **TPRPM038**	0.76-38
100	125	85	110	50	110	5	250	**TPRST065** **TPRSS065**	3.25-65
100	125	85	110	50	110	5	250	**TPRST080** **TPRSS080** **TPRPM080**	4-80

(1) When protected by any Class J or CC time-delay fuse (Class CC applicable up to 30 A only).

Group Motor Rating

Suitable for group installation on a circuit delivering not more than:				Standard Starters SIL Starters	
Max voltage 600 V - Class J Fuse (1)		Max voltage 480 V - Circuit Breaker		References	Setting range
SCCR	Maximum Amperage	SCCR	Maximum Amperage		
kA	A	kA	A		A
5	90	5	90	**TPRST009** **TPRSS009**	0.18-9
5	175	5	175	**TPRST025** **TPRSS025**	0.5-25
5	175	5	175	**TPRST038** **TPRSS038**	0.76-38
5	600	5	600	**TPRST065** **TPRSS065**	3.25-65
5	600	5	600	**TPRST080** **TPRSS080**	4-80

(1) When protected by any Class J or CC time-delay fuse.

AC-3 category

Coordination: Fuses (NFC, DIN type aM) + Contactor + Overload relay

22 to 75 kW at 400/415, 440 and 500 V: type 1 coordination

Standard power ratings of 3-phase motors 50/60 Hz in category AC-3						Fuse carrier [1] (basic block)	aM fuses		Contactor	Thermal overload relay class 10	
400/415 V		440 V		500 V		Reference	Size	Rating	Reference [2]	Reference	Setting range
P	Ie	P	Ie	P	Ie						
kW	A	kW	A	kW	A			A			A
22	41	**22**	39	**30**	44	**GS●J**	22 x 58	50	**LC1D50A**	**LRD350**	37…50
–	–	**30**	51.5	**–**	–	**GS●J**	22 x 58	80	**LC1D50A**	**LRD365**	48…65
–	–	**–**	–	**37**	53	**GS●J**	22 x 58	80	**LC1D65A**	**LRD365**	48…65
30	55	**37**	64	**–**	–	**GS●J**	22 x 58	80	**LC1D65A**	**LRD365**	48…65
–	–	**–**	–	**45**	64	**GS●J**	22 x 58	80	**LC1D80**	**LRD3361**	55…70
37 [3]	66	**45**	76	**–**	–	**GS●J**	22 x 58	100	**LC1D80**	**LRD3363**	63…80
45	80	**–**	–	**55**	78	**GS●J**	22 x 58	100	**LC1D95**	**LRD3365**	80…104
–	–	**55**	90	**–**	–	**GS●J**	22 x 58	125	**LC1D115**	**LRD4365**	80…104
55	97	**–**	–	**75**	106	**GS●J**	22 x 58	125	**LC1D115**	**LRD4367**	95…120

(1) For breaking under load, add a rotary switch-disconnector.
(2) For reversing operation, replace the prefix LC1 with LC2.
(3) 400 V maximum.

Life Is On Schneider Electric

AC-3 category

Coordination: Fuses (NFC, DIN type aM) + Contactor + Overload relay

0.06 to 90 kW at 400/415, 440 and 500 V: type 2 coordination

Standard power ratings of 3-phase motors 50/60 Hz in category AC-3						Switch-disconnector	aM fuses		Contactor	Thermal overload relay class 10	
400/415 V		440 V		500 V		Reference (1)	Size	Rating	Reference (2)	Reference	Setting range
P	Ie	P	Ie	P	Ie						
kW	A	kW	A	kW	A			A			A
0.06	0.2	**0.06**	0.19	**–**	–	**GS1DD**	10 x 38	2	**LC1D09**	**LRD02**	0.16…0.25
–	–	**0.09**	0.28	**–**	–	**GS1DD**	10 x 38	2	**LC1D09**	**LRD03**	0.25…0.4
0.09 **0.12**	0.3 0.44	**–** **0.12**	– 0.37	**–** **–**	– –	**GS1DD**	10 x 38	2	**LC1D09**	**LRD04**	0.4…0.63
0.18 **–**	0.6 –	**0.18** **0.25**	0.55 0.76	**–** **–**	– –	**GS1DD**	10 x 38	2	**LC1D09**	**LRD05**	0.63…1
0.25 **0.37** **0.55**	0.85 1.1 1.5	**–** **0.37** **0.55**	– 1 1.36	**0.37** **0.55** **0.75**	0.88 1.2 1.5	**GS1DD**	10 x 38	2	**LC1D09**	**LRD06**	1…1.7
0.75 **–**	1.9 –	**0.75** **1.1**	1.68 2.37	**–** **1.1**	– 2.2	**GS1DD**	10 x 38	4	**LC1D09**	**LRD07**	1.6…2.5
1.1 **1.5**	2.7 3.6	**–** **1.5**	– 3.06	**1.5** **2.2**	2.9 3.9	**GS1DD**	10 x 38	4	**LC1D09**	**LRD08**	2.5…4
2.2	4.9	**2.2**	4.42	**3**	5.2	**GS1DD**	10 x 38	6	**LC1D09**	**LRD10**	4…6
3	6.5	**3**	5.77	**4**	6.8	**GS1DD**	10 x 38	8	**LC1D09**	**LRD12**	5.5…8
4	8.5	**4**	7.9	**5.5**	9.2	**GS1DD**	10 x 38	10	**LC1D09**	**LRD14**	7…10
5.5	11.5	**5.5**	10.4	**7.5**	12.4	**GS1DD**	10 x 38	16	**LC1D12**	**LRD16**	9…13
7.5	15.5	**7.5**	13.7	**9**	13.9	**GS1DD**	10 x 38	16	**LC1D18**	**LRD21**	12…18
–	–	**9**	16.9	**–**	–	**GS●F**	14 x 51	20	**LC1D25**	**LRD21**	12…18
9 **11**	18.1 22	**11** **–**	20.1 –	**11** **15**	17.6 23	**GS●F**	14 x 51	25	**LC1D25**	**LRD22**	16…24
15	29	**15**	26.5	**18.5**	28	**GS●F**	14 x 51	32	**LC1D32**	**LRD32**	23…32
18.5	35	**18.5**	32.8	**22**	33	**GS●F**	14 x 51	40	**LC1D40A**	**LRD340**	30…40
22	41	**22**	39	**30**	44	**GS●J**	22 x 58	50	**LC1D50A**	**LRD350**	37…50
–	–	**30**	51.5	**–**	–	**GS●J**	22 x 58	80	**LC1D65A**	**LRD365**	48…65
–	–	**–**	–	**37**	53	**GS●J**	22 x 58	80	**LC1D65A**	**LRD365**	48…65
30	55	**37**	64	**–**	–	**GS●J**	22 x 58	80	**LC1D65A**	**LRD365**	48…65
–	–	**–**	–	**45**	64	**GS●J**	22 x 58	80	**LC1D95**	**LRD3361**	55…70
37	66	**45**	76	**–**	–	**GS●J**	22 x 58	100	**LC1D80**	**LRD3363**	63…80
–	–	**–**	–	**55**	78	**GS●J**	22 x 58	100	**LC1D115**	**LR9D5367**	60…100
45	80	**–**	–	**–**	–	**GS●J**	22 x 58	100	**LC1D95**	**LRD3365**	80…104
55	97	**55**	90	**75**	106	**GS●L**	T0	125	**LC1D150**	**LR9D5369**	90…150
75	132	**75**	125	**90**	128	**GS●L**	T0	160	**LC1D150**	**LR9D5369**	90…150

(1) GS●: GS1 for direct operator or GS2 for external operator.
(2) For reversing operation, replace the prefix LC1 with LC2.

AC-3 category

Coordination: Fuses (NFC, DIN type aM) + Contactor + Overload relay

55 to 335 kW at 400/415 V: type 2 coordination

Standard power ratings of 3-phase motors 50/60 Hz in category AC-3e			Switch-disconnector	aM fuses		Contactor	Thermal overload relay	
400/415 V			Product type	Size	Rating	Product type	Product type	Ir setting (1)
P	Ie	Iq (max)						
kW	A	kA			A			A
55	97	80	**GS●L**	0	125	**LC1G115**	**LR9G115**	97
75	132	80	**GS●L**	0	160	**LC1G150**	**LR9G225**	132
90	160	80	**GS●N**	1	200	**LC1G185**	**LR9G225**	160
110	195	80	**GS●N**	1	250	**LC1G225**	**LR9G225**	195
132	230	80	**GS●QQ**	2	315	**LC1G265**	**LR9G500**	230
160	280	80	**GS●QQ**	2	400	**LC1G330**	**LR9G500**	280
200	350	80	**GS2S**	3	500	**LC1G400**	**LR9G500**	350
220	380	80	**GS2S**	3	500	**LC1G500**	**LR9G500**	380
250	430	80	**GS2S**	3	500	**LC1G500**	**LR9G500**	430
315	540	80	**GS2S**	3	630	**LC1G630**	**LR9G630**	540
335	575	80	**GS2V**	4	800	**LC1G630**	**LR9G630**	575

75 to 400 kW at 440 V: type 2 coordination

Standard power ratings of 3-phase motors 50/60 Hz in category AC-3e			Switch-disconnector	aM fuses		Contactor	Thermal overload relay	
440 V			Product type	Size	Rating	Product type	Product type	Ir setting (1)
P	Ie	Iq (max)						
kW	A	kA			A			A
75	115	80	**GS●L**	0	125	**LC1G115**	**LR9G115**	115
90	145	80	**GS●L**	0	160	**LC1G150**	**LR9G225**	145
110	177	80	**GS●N**	1	200	**LC1G185**	**LR9G225**	177
132	209	80	**GS●N**	1	250	**LC1G225**	**LR9G225**	209
160	255	80	**GS●QQ**	2	315	**LC1G265**	**LR9G500**	255
200	318	80	**GS●QQ**	2	400	**LC1G330**	**LR9G500**	318
220	343	80	**GS2S**	3	500	**LC1G400**	**LR9G500**	343
250	390	80	**GS2S**	3	500	**LC1G500**	**LR9G500**	390
315	490	80	**GS2S**	3	500	**LC1G500**	**LR9G500**	490
355	554	80	**GS2S**	3	630	**LC1G630**	**LR9G630**	554
400	627	80	**GS2V**	4	800	**LC1G630**	**LR9G630**	627

65 to 375 kW at 500 V: type 2 coordination

Standard power ratings of 3-phase motors 50/60 Hz in category AC-3e			Switch-disconnector	aM fuses		Contactor	Thermal overload relay	
500 V			Product type	Size	Rating	Product type	Product type	Ir setting (1)
P	Ie	Iq (max)						
kW	A	kA			A			A
65	92	80	**GS●L**	0	125	**LC1G115**	**LR9G115**	92
90	128	80	**GS●L**	0	160	**LC1G150**	**LR9G225**	128
110	156	80	**GS●N**	1	200	**LC1G185**	**LR9G225**	156
132	184	80	**GS●N**	1	250	**LC1G225**	**LR9G225**	184
160	224	80	**GS●QQ**	2	315	**LC1G265**	**LR9G500**	224
200	280	80	**GS●QQ**	2	400	**LC1G330**	**LR9G500**	280
250	344	80	**GS2S**	3	500	**LC1G400**	**LR9G500**	344
295	405	80	**GS2S**	3	500	**LC1G500**	**LR9G500**	405
375	516	80	**GS2S**	3	630	**LC1G630**	**LR9G630**	516

(1) This setting is a general guidance, Ir should be adjusted according to motor characteristics and conditions of use.

Life Is On Schneider Electric

AC-3 category

Coordination: Fuses (NFC, DIN type aM) + Contactor + Overload relay

0.75 to 90 kW at 690 V: type 2 coordination

Standard power ratings of 3-phase motors 50/60 Hz in category AC-3		Switch-disconnector	aM fuses		Contactor	Thermal overload relay class 10	
P	Ie	Reference [1]	Size	Rating	Reference [2]	Reference	Setting range
kW	A			A			A
0.75	1.1	**GS●F**	14 x 51	2	**LC1D09**	**LRD06**	1…1.6
1.1	1.6	**GS●F**	14 x 51	2	**LC1D09**	**LRD06**	1…1.6
1.5	2.1	**GS●F**	14 x 51	4	**LC1D09**	**LRD07**	1.6…2.5
2.2	2.8	**GS●F**	14 x 51	4	**LC1D09**	**LRD08**	2.5…4
3	3.8	**GS●F**	14 x 51	6	**LC1D09**	**LRD08**	2.5…4
4	4.9	**GS●F**	14 x 51	6	**LC1D09**	**LRD10**	4…6
5.5	6.7	**GS●F**	14 x 51	8	**LC1D09**	**LRD12**	5.5…8
7.5	8.9	**GS●F**	14 x 51	10	**LC1D25**	**LRD16**	9…13
11	12.8	**GS●F**	14 x 51	16	**LC1D25**	**LRD16**	9…13
15	17	**GS●F**	14 x 51	20	**LC1D25**	**LRD22**	16…24
18.5	21	**GS●F**	14 x 51	25	**LC1D32**	**LRD22**	16…24
22	24	**GS●J**	22 x 58	32	**LC1D40A**	**LRD332**	23…32
30	32	**GS●J**	22 x 58	40	**LC1D40A**	**LRD340**	30…40
37	39	**GS●J**	22 x 58	50	**LC1D65A**	**LRD350**	37…50
45	47	**GS●J**	22 x 58	63	**LC1D80**	**LRD3357**	37…50
55	57	**GS●J**	22 x 58	80	**LC1D115**	**LRD3359**	48…65
75	77	**GS●KK**	T00	100	**LC1D115**	**LRD3363**	63…80
90	93	**GS●KK**	T00	125	**LC1D150**	**LR9D5369**	90…150

55 to 500 kW at 690 V: type 2 coordination

Standard power ratings of 3-phase motors 50/60 Hz in category AC-3e			Switch-disconnector	aM fuses		Contactor	Thermal overload relay	
690 V			Product type	Size	Rating	Product type	Product type	Ir setting [3]
P	Ie	Iq (max)						
kW	A	kA			A			A
55	57	80	**GS●J**	22 x 58	80	**LC1G115**	**LR9G225**	57
75	77	80	**GS●KK**	00	100	**LC1G115**	**LR9G225**	77
90	93	80	**GS●KK**	00	125	**LC1G150**	**LR9G225**	93
110	113	80	**GS●KK**	00	160	**LC1G185**	**LR9G225**	113
132	134	80	**GS●L**	0	160	**LC1G225**	**LR9G225**	134
160	162	80	**GS●N**	1	200	**LC1G225**	**LR9G225**	162
200	203	80	**GS●N**	1	250	**LC1G265**	**LR9G500**	203
220	223	80	**GS●QQ**	2	250	**LC1G330**	**LR9G500**	223
250	250	80	**GS●QQ**	2	315	**LC1G330**	**LR9G500**	250
315	313	80	**GS●QQ**	2	400	**LC1G400**	**LR9G500**	313
355	354	80	**GS●QQ**	3	500	**LC1G500**	**LR9G500**	354
500	493	80	**GS●S**	3	630	**LC1G630**	**LR9G630**	493

(1) GS●: GS1 for direct operator or GS2 for external operator.
(2) For reversing operation, replace the prefix LC1 with LC2.
(3) This setting is a general guidance, Ir should be adjusted according to motor characteristics and conditions of use.

AC-3 category

Coordination: Fuses (NFC, DIN type aM) + Contactor + Electronic overload relay

0.18 to 55 kW at 400/415 and 690 V: type 2 coordination

Standard power ratings of 3-phase motors 50/60 Hz in category AC-3						Switch-disconnector	aM fuses		Contactor	Electronic thermal overload relay	
400/415 V			690 V			Reference	Size	Rating	Reference	Reference	Setting range
P	Ie	Iq	P	Ie	Iq						
kW	A	kA	kW	A	kA			A			A
0.18	0.6	100	**–**	–	–	**GS1DD**	10 x 38	2	**LC1D09**	**LR9D02**	0.4…2.0
0.25	0.85	100	**–**	–	–	**GS1DD**	10 x 38	2	**LC1D09**	**LR9D02**	0.4…2.0
0.37	1.1	100	**–**	–	–	**GS1DD**	10 x 38	2	**LC1D09**	**LR9D02**	0.4…2.0
0.55	1.5	100	**–**	–	–	**GS1DD**	10 x 38	2	**LC1D09**	**LR9D02**	0.4…2.0
0.75	1.9	100	**–**	–	–	**GS1DD**	10 x 38	4	**LC1D09**	**LR9D02**	0.4…2.0
1.1	2.7	100	**–**	–	–	**GS1DD**	10 x 38	4	**LC1D18**	**LR9D08**	1.6…8.0
1.5	3.6	100	**–**	–	–	**GS1DD**	10 x 38	4	**LC1D18**	**LR9D08**	1.6…8.0
2.2	4.9	100	**–**	–	–	**GS1DD**	10 x 38	6	**LC1D18**	**LR9D08**	1.6…8.0
3	6.5	100	**–**	–	–	**GS1DD**	10 x 38	8	**LC1D18**	**LR9D32**	6.4…32
4	8.5	100	**–**	–	–	**GS1DD**	10 x 38	10	**LC1D18**	**LR9D32**	6.4…32
5.5	11.5	100	**–**	–	–	**GS1DD**	10 x 38	16	**LC1D25**	**LR9D32**	6.4…32
7.5	15.5	50	**–**	–	–	**GS1DD**	10 x 38	16	**LC1D25**	**LR9D32**	6.4…32
11	22	50	**–**	–	–	**GS●F**	14 x 51	25	**LC1D25**	**LR9D32**	6.4…32
15	29	50	**–**	–	–	**GS●J**	22 x 58	32	**LC1D65A**	**LR9D110S**	22…110
18.5	35	50	**–**	–	–	**GS●J**	22 x 58	40	**LC1D65A**	**LR9D110S**	22…110
22	41	50	**–**	–	–	**GS●J**	22 x 58	50	**LC1D65A**	**LR9D110S**	22…110
45 (1)	80	100	**–**	–	–	**GS●N**	T 1	100	**LC1D150**	**LR9D110S**	22…110
55 (1)	97	100	**–**	–	–	**GS●N**	T 1	125	**LC1D150**	**LR9D110S**	22…110
–	–	–	**0.37**	0.64	100	**GS●F**	14 x 51	2	**LC1D09**	**LR9D02**	0.4…2.0
–	–	–	**0.55**	0.87	100	**GS●F**	14 x 51	2	**LC1D09**	**LR9D02**	0.4…2.0
–	–	–	**0.75**	1.1	100	**GS●F**	14 x 51	2	**LC1D09**	**LR9D02**	0.4…2.0
–	–	–	**1.1**	1.6	100	**GS●F**	14 x 51	2	**LC1D25**	**LR9D08**	1.6…8.0
–	–	–	**1.5**	2.1	100	**GS●F**	14 x 51	4	**LC1D25**	**LR9D08**	1.6…8.0
–	–	–	**2.2**	2.8	100	**GS●F**	14 x 51	4	**LC1D25**	**LR9D08**	1.6…8.0
–	–	–	**3**	4	100	**GS●F**	14 x 51	6	**LC1D25**	**LR9D08**	1.6…8.0
–	–	–	**4**	5	100	**GS●F**	14 x 51	6	**LC1D25**	**LR9D08**	1.6…8.0
–	–	–	**5.5**	7	50	**GS●F**	14 x 51	8	**LC1D25**	**LR9D32**	6.4…32
–	–	–	**7.5**	8.9	50	**GS●F**	14 x 51	10	**LC1D25**	**LR9D32**	6.4…32
–	–	–	**11**	13	50	**GS●F**	14 x 51	16	**LC1D32**	**LR9D32**	6.4…32
–	–	–	**15**	16.5	50	**GS●F**	14 x 51	20	**LC1D32**	**LR9D32**	6.4…32
–	–	–	**18.5**	21	100	**GS●F**	14 x 51	25	**LC1D95**	**LR9D32**	6.4…32
–	–	–	**18.5**	21	50	**GS●F**	14 x 51	25	**LC1D65A**	**LR9D32**	6.4…32
–	–	–	**22**	25	50	**GS●F**	14 x 51	32	**LC1D65A**	**LR9D32**	6.4…32
–	–	–	**30**	33	100	**GS●F**	14 x 51	40	**LC1D95**	**LR9D110**	22…110
–	–	–	**37**	40	100	**GS●F**	14 x 51	50	**LC1D95**	**LR9D110**	22…110
–	–	–	**45**	49	100	**GS●J**	22 x 58	63	**LC1D95**	**LR9D110**	22…110

(1) Ratings valid up to 400 V AC only.

Life Is On Schneider Electric

Coordination: Fuses (BS) + Contactor + Overload relay

AC-3 category

0.06 to 80 kW at 415, 440 and 500 V: type 2 coordination

Standard power ratings of 3-phase motors 50/60 Hz in category AC-3						Switch-disconnector-fuse	BS fuses		Contactor	Thermal overload relay	
415 V		440 V		500 V		Reference	Size	Rating	Reference [1]	Reference	Setting range
P	Ie	P	Ie	P	Ie						
kW	A	kW	A	kW	kA			A			A
0.06	0.22	**0.06**	0.19	**–**	–	**GS1DDB**	A1	NIT 2	**LC1D09**	**LRD02**	0.16…0.25
–	–	**0.09**	0.28	**–**	–	**GS1DDB**	A1	NIT 2	**LC1D09**	**LRD03**	0.25…0.4
0.09	0.36	**–**	–	**–**	–						
0.12	0.42	**0.12**	0.37	**–**	–	**GS1DDB**	A1	NIT 2	**LC1D09**	**LRD04**	0.4…0.63
0.18	0.6	**0.18**	0.55	**–**	–	**GS1DDB**	A1	NIT 2	**LC1D09**	**LRD05**	0.63…1
–	–	**0.25**	0.76	**–**	–	**GS1DDB**	A1	NIT 4	**LC1D09**	**LRD05**	0.63…1
0.25	0.88	**0.37**	1	**0.37**	1						
0.37	1	**0.55**	1.36	**0.55**	1.2						
0.55	1.5	**0.75**	1.68	**0.75**	1.5	**GS1DDB**	A1	NIT 6	**LC1D09**	**LRD06**	1…1.7
0.75	2	**–**	–	**–**	–	**GS1DDB**	A1	NIT 10	**LC1D09**	**LRD07**	1.6…2.5
–	–	**–**	–	**1.5**	2.6	**GS1DDB**	A1	NIT 10	**LC1D09**	**LRD08**	2.5…4
1.5	3.5	**1.5**	3.06	**2.2**	3.8	**GS1DDB**	A1	NIT 16	**LC1D09**	**LRD08**	2.5…4
2.2	5	**2.2**	4.42	**3**	5	**GS1DDB**	A1	NIT 16	**LC1D09**	**LRD10**	4…6
3	6.5	**3**	5.77	**4**	6.5	**GS1DDB**	A1	NIT 20	**LC1D09**	**LRD12**	5.5…8
4	8.4	**4**	7.9	**5.5**	9	**GS1DDB**	A1	NIT 20	**LC1D09**	**LRD14**	7…10
5.5	11	**5.5**	10.4	**7.5**	12	**GS1DDB**	A1	NIT 20M25	**LC1D12**	**LRD16**	9…13
7.5	14	**7.5**	13.7	**9**	13.9	**GS1DDB**	A1	NIT 20M32	**LC1D18**	**LRD21**	12…18
9	18.1	**9**	16.9	**–**	–	**GS2GB**	A2	TIA 32M35	**LC1D18**	**LRD21**	12…18
11	21	**11**	20	**11**	18.4						
–	–	**–**	–	**15**	23	**GS2GB**	A2	TIA 32M50	**LC1D25**	**LRD22**	16…24
15	28.5	**15**	26.5	**–**	–	**GS2GB**	A2	TIA 32M63	**LC1D32**	**LRD32**	23…32
18.5	35	**18.5**	32.8	**–**	–	**GS2GB**	A3	TIS 63M80	**LC1D40A**	**LRD340**	25…40
22	41	**22**	39	**–**	–	**GS2GB**	A3	TIS 63M80	**LC1D50A**	**LRD350**	37…50
30	55	**30**	51.5	**–**	–	**GS2GB**	A3	TIS 63M100	**LC1D65A**	**LRD365**	48…65
–	–	**37**	64	**–**	–	**GS2GB**	A3	TIS 63M100	**LC1D65A**	**LRD365**	48…65
–	–	**45**	76	**45**	65	**GS2LLB**	A4	TCP 100M125	**LC1D80**	**LRD3363**	63…80
45	81	**–**	–	**55**	80	**GS2LLB**	A4	TCP 100M125	**LC1D95**	**LRD3365**	80…104
55	100	**–**	–	**–**	–	**GS2LLB**	A4	TCP 100M160	**LC1D115**	**LR9D5369**	90…150
–	–	**55**	90	**–**	–	**GS2LLB**	A4	TCP 100M160	**LC1D115**	**LR9D5367**	60…100
–	–	**–**	–	**80**	116	**GS2LB**	B2	TF 200	**LC1D150**	**LR9D5369**	90…150
80	138	**80**	132	**–**	–	**GS2LB**	B2	TF 200M250	**LC1D150**	**LR9D5369**	90…150

(1) For reversing operation, replace the prefix LC1 with LC2.

AC-3 category

Coordination: Thermal magnetic circuit breaker + Contactor

0.06 to 90 kW at 400/415, 440 and 500 V: type 1 coordination

Standard power ratings of 3-phase motors 50/60 Hz in category AC-3									Circuit breaker		Contactor
400/415 V			440 V			500 V			Reference *References in italics are available in CEE zone only*	Setting range of thermal trips	Reference [2]
P	Ie	Iq [1]	P	Ie	Iq [1]	P	Ie	Iq [1]			
kW	A	kA	kW	A	kA	kW	A	kA		A	
0.06	0.2	50	**0.06**	0.19	50	–	–	–	**GV2ME02** *GV2ME02AP*	0.16…0.25	**LC1K06** or **LC1D09**
0.09	0.3	50	**0.09** **0.12**	0.28 0.37	50 50	–	–	–	**GV2ME03** *GV2ME03AP*	0.25…0.40	**LC1K06** or **LC1D09**
0.12 **0.18**	0.44 0.6	50 50	– **0.18**	– 0.55	– 50	– –	– –	– –	**GV2ME04** *GV2ME04AP*	0.40…0.63	**LC1K06** or **LC1D09**
0.25 **0.37**	0.85 1.1	50 50	**0.25** **0.37**	0.76 0.99	50 50				**GV2ME05** *GV2ME05AP*	0.63…1	**LC1K06** or **LC1D09**
– **0.55**	– 1.5	– 50	– **0.55**	– 1.36	– 50	**0.37** **0.55**	0.88 1.2	50 50	**GV2ME06** *GV2ME06AP*	1…1.6	**LC1K06** or **LC1D09**
–	–	–	–	–	–	**0.75**	1.5	50	**GV2ME06** *GV2ME06AP*	1…1.6	**LC1K06** or **LC1D09**
0.75 –	1.9 –	50 –	**0.75** **1.1**	1.68 2.37	50 50	– **1.1**	– 2.2	– 50	**GV2ME07** *GV2ME07AP*	1.6….2.5	**LC1K06** or **LC1D09**
1.1 **1.5**	2.7 3.6	50 50	– **1.5**	– 3.06	– 50	**1.5** **2.2**	2.9 3.9	50 50	**GV2ME08** *GV2ME08AP*	2.5…4	**LC1K06** or **LC1D09**
2.2 –	4.9 –	50 –	**2.2** **3**	4.42 5.77	50 50	– **3**	– 5.2	– 50	**GV2ME10** *GV2ME10AP*	4…6.3	**LC1K06** or **LC1D09**
3 **4**	6.5 8.5	50 50	– **4**	– 7.9	– 15	**4** **5.5**	6.8 9.2	10 10	**GV2ME14** *GV2ME14AP*	6…10	**LC1K09** or **LC1D09**
5.5	11.5	15	**5.5**	10.4	8	**7.5**	12.4	6	**GV2ME16** *GV2ME16AP*	9…14	**LC1K12** or **LC1D12**
7.5 –	15.5 –	15 –	**7.5** **9**	13.7 16.9	8 8	**9** –	13.9 –	6 –	**GV2ME20** *GV2ME20AP*	13…18	**LC1D18**
9	18.1	15	**11**	20.1	6	**11**	17.6	4	**GV2ME21** *GV2ME21AP*	17…23	**LC1D25**
11	22	15	–	–	–	**15**	23	4	**GV2ME22** *GV2ME22AP*	20…25	**LC1D25**
15	29	10	**15**	26.5	6	**18.5**	28	4	**GV2ME32** *GV2ME32AP*	24…32	**LC1D32**
18.5	35	50	**18.5**	32.8	50	**22**	33	10	**GV3P40**	30…40	**LC1D40A**
22	41	50	**22**	39	50	**30**	44	10	**GV3P50**	37…50	**LC1D50A**
30	55	50	**30**	51.5	50	**37**	53	10	**GV3P65**	48…65	**LC1D65A**
37	66	50	–	–	–	–	–	–	**GV3P73**	62...73	**LC1D80A**
–	–	–	**37**	64	70	**45**	64	30	**GV4P80**	40…80	**LC1D65A**
37	66	100	**45**	76	70	**55**	78	30	**GV4P80**	40…80	**LC1D80**
45	80	100	–	–	–	–	–	–	**GV4P115**	65...115	**LC1D95**
55	97	100	**55**	90	70	**75**	106	30	**GV4P115**	65...115	**LC1D115**
75 [3]	132	36	**75** [3]	125	35	**90** [3]	128	30	**GV5P150F**	70...150	**LC1D150**

*(1) The breaking performance of circuit breakers **GV2ME** can be increased by adding a current limiter **GV1L3**.*
(2) For reversing operation, replace the prefix LC1 with LC2.
(3) Please refer to Type 2 coordination tables for higher ratings.

Life Is On Schneider Electric

AC-3 category

Coordination: Thermal magnetic circuit breaker + Contactor

0.06 to 90 kW at 400/415, 440 and 500 V: type 2 coordination

Standard power ratings of 3-phase motors 50/60 Hz in category AC-3									Circuit breaker		Contactor
400/415 V			440 V			500 V			Reference *References in italics are available in CEE zone only*	Setting range of thermal trips	Reference (2)
P	Ie	Iq (1)	P	Ie	Iq (1)	P	Ie	Iq (1)			
kW	A	kA	kW	A	kA	kW	A	kA		A	
0.06	0.2	130	**0.06**	0.19	130	–	–	–	**GV2P02** or **GV2ME02** or *GV2ME02AP*	0.16…0.25	**LC1D09**
– **0.09**	– 0.3	– 130	**0.09** **0.12**	0.28 0.37	130 130	– –	– –	– –	**GV2P03** or **GV2ME03** or *GV2ME03AP*	0.25…0.4	**LC1D09**
0.12 **0.18**	0.44 0.6	130 130	– **0.18**	– 0.55	– 130	– –	– –	– –	**GV2P04** or **GV2ME04** or *GV2ME04AP*	0.4…0.63	**LC1D09**
0.25 **0.37**	0.85 1.1	130 130	**0.25** **0.37**	0.76 0.99	130 130	– –	– –	– –	**GV2P05** or **GV2ME05** or *GV2ME05AP*	0.63…1	**LC1D09**
– **0.55**	– 1.5	– 130	– **0.55**	– 1.36	– 130	**0.37** **0.55**	0.88 1.2	130 130	**GV2P06** or **GV2ME06** or *GV2ME06AP*	1…1.6	**LC1D09**
–	–	–	–	–	–	**0.75**	1.5	130	**GV2P06** or **GV2ME06** or *GV2ME06AP*	1…1.6	**LC1D09**
0.75 –	1.9 –	130 –	**0.75** **1.1**	1.68 2.37	130 130	– **1.1**	– 2.2	– 130	**GV2P07** or **GV2ME07** or *GV2ME07AP*	1.6…2.5	**LC1D09**
1.1 **1.5**	2.7 3.6	130 130	– **1.5**	– 3.06	– 130	**1.5** **2.2**	2.9 3.9	130 130	**GV2P08** or **GV2ME08** or *GV2ME08AP*	2.5…4	**LC1D09**
– **2.2**	– 4.9	– 130	– –	– –	– –	– –	– –	– –	**GV2P10** or **GV2ME10** or *GV2ME10AP*	4…6.3	**LC1D09**
– –	– –	– –	**2.2** **3**	4.42 5.77	50 50	– **3**	– 5.2	– 50	**GV2ME10** or *GV2ME10AP*	4…6.3	**LC1D09**
– –	– –	– –	**2.2** **3**	4.42 5.77	130 130	– **3**	– 5.2	– 130	**GV2P10**	4…6.3	**LC1D09**
3 **4**	6.5 8.5	130 130	– –	– –	– –	– –	– –	– –	**GV2P14** or **GV2ME14** or *GV2ME14AP*	6…10	**LC1D09**
– –	– –	– –	**4** –	7.9 –	15 –	**4** **5.5**	6.8 9.2	10 10	**GV2ME14** or *GV2ME14AP*	6…10	**LC1D09**
– –	– –	– –	– **4**	– 7.9	– 130	**4** **5.5**	6.8 9.2	50 50	**GV2P14**	6…10	**LC1D12**
5.5 –	11.5 –	130 –	**5.5** **7.5**	10.4 13.7	50 or 8 50 or 8	**7.5** **9**	12.4 13.9	42 or 6 42 or 6	**GV2P16** or **GV2ME16** or *GV2ME16AP*	9…14	**LC1D25**
7.5	15.5	50 or 15	**9**	16.9	20 or 8	–	–	–	**GV2P20** or **GV2ME20** or *GV2ME20AP*	13…18	**LC1D25**
9	18.1	50 or 15	**11**	20.1	20 or 8	**11**	17.6	10 or 6	**GV2P21** or **GV2ME21** or *GV2ME21AP*	17…23	**LC1D25**
11	22	50 or 15	–	–	–	–	–	–	**GV2P22** or **GV2ME22** or *GV2ME22AP*	20…25	**LC1D25**
–	–	–	–	–	–	**15**	23	10 or 6	**GV2P22**	20…25	**LC1D25**
15	29	50 or 10	**15**	26.5	20 or 6	**18.5**	28	10 or 4	**GV2P32** or **GV2ME32** or *GV2ME32AP*	24…32	**LC1D32**
18.5	35	50	–	–	–	–	–	–	**GV3P40**	30…40	**LC1D50A**
–	–	–	**18.5**	32.8	50	**22**	33	10	**GV3P40**	30…40	**LC1D65A**
22	41	50	–	–	–	–	–	–	**GV3P50**	37…50	**LC1D50A**
–	–	–	**22**	39	50	**30**	44	10	**GV3P50**	37…50	**LC1D65A**
30	55	50	**30**	51.5	50	–	–	–	**GV3P65**	48…65	**LC1D65A**
–	–	–	–	–	–	**37**	53	10	**GV3P65**	48…65	**LC1D65A**
37	66	50	–	–	–	–	–	–	**GV3P73**	62...73	**LC1D80A**
–	–	–	**37**	64	70	–	–	–	**GV4P80**	40…80	**LC1D65A**
37	66	100	**45**	76	70	(3)	(3)	(3)	**GV4P80**	40…80	**LC1D80**
45 **55**	80 97	100 100	**55** –	90 –	70 –	(3) (3)	(3) (3)	(3) (3)	**GV4P115**	65 …115	**LC1D115**
75	132	70	**75** **90**	125 146	65 65	– –	– –	– –	**GV5P150H**	70...150	**LC1D150**

*(1) The breaking performance of circuit breakers **GV2P** can be increased by adding a current limiter **GV1L3**.*
*(2) Combinations with circuit breaker **GV2ME** are type 2 coordinated only at 400/415 V and 440 V.*
(3) Please consult your regional sales office.

AC-3 category

Coordination: Thermal magnetic circuit breaker + Contactor

45 to 250 kW at 400/415 V: type 2 coordination (with TeSys GV4/GV5/GV6 circuit breakers)

Standard power ratings of 3-phase motors 50/60 Hz in category AC-3e			Circuit breaker			Contactor
400/415 V			Product type [1]	Ir setting [2]	Irm [2]	Product type
P	Ie	Iq (max)				
kW	A	kA		A	A	
45	80	100	**GV4P/GV4PE/GV4PEM115●**	86	774	**LC1G115**
55	97	100	**GV4P/GV4PE/GV4PEM115●**	100	900	**LC1G115**
55	97	70	**GV5P150●**	100	1300	**LC1G115**
75	132	70	**GV5P150●**	140	1820	**LC1G150**
90	160	70	**GV5P220●**	170	2210	**LC1G185**
110	195	70	**GV5P220●**	200	2600	**LC1G225**
110	195	70	**GV6P320●**	200	2600	**LC1G265**
132	230	70	**GV6P320●**	240	3120	**LC1G265**
160	280	70	**GV6P320●**	300	3900	**LC1G330**
200	350	70	**GV6P500●**	380	4940	**LC1G400**
220	380	70	**GV6P500●**	400	5200	**LC1G500**
250	430	70	**GV6P500●**	440	5720	**LC1G500**

(1) Product type to be completed by replacing the ● with the breaking performance code:

Rated conditional short-circuit (kA)	GV4P/GV4PE/GV4PEM115●			GV5P150●/ 220● GV6P320●/ 500●	
Breaking performance code	**B**	**N**	**S**	**F**	**H**
400/415 V	25	50	100	36	70

Coordination and standards

45 to 450 kW at 400/415 V: type 2 coordination (with ComPact NSX/NS circuit breakers)

Standard power ratings of 3-phase motors 50/60 Hz in category AC-3e			Circuit breaker			Contactor
400/415 V			Product type [1]	Ir setting [2]	Irm [2]	Product type
P	Ie	Iq (max)				
kW	A	kA		A	A	
45	80	130	**NSX100● + MicroLogic 2.2 M**	85	1105	**LC1G115**
55	97	130	**NSX160● + MicroLogic 2.2 M** [3]	100	1300	**LC1G115**
75	132	130	**NSX160● + MicroLogic 2.2 M** [3]	140	1820	**LC1G150**
90	160	130	**NSX250● + MicroLogic 2.2 M** [3]	170	2210	**LC1G185**
110	195	130	**NSX250● + MicroLogic 2.2 M** [3]	200	2600	**LC1G225**
110	195	130	**NSX400● + MicroLogic 2.3 M** [3]	200	2600	**LC1G265**
132	230	130	**NSX400● + MicroLogic 2.3 M** [3]	240	3120	**LC1G265**
160	280	130	**NSX400● + MicroLogic 2.3 M** [3]	300	3900	**LC1G330**
200	350	130	**NSX630● + MicroLogic 2.3 M** [3]	380	4940	**LC1G400**
220	380	130	**NSX630● + MicroLogic 2.3 M** [3]	400	5200	**LC1G500**
250	430	130	**NSX630● + MicroLogic 2.3 M** [3]	440	5720	**LC1G500**
300	500	130	**NS800● + MicroLogic 5.0**	560	5040	**LC1G630**
335	575	130	**NS800● + MicroLogic 5.0**	640	5760	**LC1G630**
355	610	130	**NS800● + MicroLogic 5.0**	640	5760	**LC1G800**
400	690	130	**NS800● + MicroLogic 5.0**	720	6480	**LC1G800**
450	770	130	**NS1000● + MicroLogic 5.0**	784	7840	**LC1G800**

(1) Product type to be completed by replacing the ● with the breaking performance code:

Rated conditional short-circuit (kA)	NSX100●/ NSX160● / NSX250●/ NSX400●/ NSX630●					NS800●/ NS1000●
Breaking performance code	**F**	**N**	**H**	**S**	**L**	**L**
400/415 V	36	50	70	100	130	150

(2) This setting is a general guidance, Ir and Irm should be adjusted according to motor characteristics and conditions of use.
(3) Applicable also with MicroLogic 6.2 E-M and 6.3 E-M trip units.

Life Is On Schneider Electric

AC-3 category

Coordination: Thermal magnetic circuit breaker + Contactor

55 to 300 kW at 440 V: type 2 coordination (with TeSys GV4 / GV5 / GV6 circuit breakers)

Standard power ratings of 3-phase motors 50/60 Hz in category AC-3e			Circuit breaker			Contactor
440 V			Product type [1]	Ir setting [2]	Irm [2]	Product type
P	Ie	Iq (max)				
kW	A	kA		A	A	
55	88	70	**GV4P/GV4PE/GV4PEM115●**	93	837	**LC1G115**
55	88	65	**GV5P150●**	90	1170	**LC1G115**
75	120	65	**GV5P150●**	130	1690	**LC1G150**
90	145	65	**GV5P150●**	150	1950	**LC1G150**
110	177	65	**GV5P220●**	185	2405	**LC1G185**
132	209	65	**GV5P220●**	210	2730	**LC1G225**
160	255	65	**GV6P320●**	260	3380	**LC1G265**
200	318	65	**GV6P320●**	320	4160	**LC1G330**
220	343	65	**GV6P500●**	350	4550	**LC1G400**
250	390	65	**GV6P500●**	400	5200	**LC1G400**
300	466	65	**GV6P500●**	470	6110	**LC1G500**

(1) Product type to be completed by replacing the ● with the breaking performance code:

Rated conditional short-circuit (kA)	GV4P/GV4PE/GV4PEM115●			GV5P150●/ 220●		GV6P320●/ 500●	
Breaking performance code	**B**	**N**	**S**	**F**	**H**	**F**	**H**
440 V	20	50	70	35	65	30	65

Coordination and standards

55 to 450 kW at 440 V: type 2 coordination (with ComPact NSX / NS circuit breakers)

Standard power ratings of 3-phase motors 50/60 Hz in category AC-3e			Circuit breaker			Contactor
440 V			Product type [1]	Ir setting [2]	Irm [2]	Product type
P	Ie	Iq (max)				
kW	A	kA		A	A	
55	88	130	**NSX100● + MicroLogic 2.2 M**	90	1170	**LC1G115**
75	120	130	**NSX160● + MicroLogic 2.2 M** [3]	130	1690	**LC1G150**
90	145	130	**NSX160● + MicroLogic 2.2 M** [3]	150	1950	**LC1G150**
110	177	130	**NSX250● + MicroLogic 2.2 M** [3]	185	2405	**LC1G185**
132	209	130	**NSX250● + MicroLogic 2.2 M** [3]	210	2730	**LC1G225**
160	255	130	**NSX400● + MicroLogic 2.3 M** [3]	260	3380	**LC1G265**
200	318	130	**NSX400● + MicroLogic 2.3 M** [3]	320	4160	**LC1G330**
220	343	130	**NSX630● + MicroLogic 2.3 M** [3]	350	4550	**LC1G400**
250	390	130	**NSX630● + MicroLogic 2.3 M** [3]	400	5200	**LC1G400**
300	466	130	**NSX630● + MicroLogic 2.3 M** [3]	470	6110	**LC1G500**
335	521	130	**NS800● + MicroLogic 5.0**	560	5040	**LC1G630**
355	554	130	**NS800● + MicroLogic 5.0**	560	5040	**LC1G630**
400	627	130	**NS800● + MicroLogic 5.0**	640	5760	**LC1G800**
450	695	130	**NS800● + MicroLogic 5.0**	720	6480	**LC1G800**

(1) Product type to be completed by replacing the ● with the breaking performance code:

Rated conditional short-circuit (kA)	NSX100●/ NSX160●/ NSX250●					NSX400●/ NSX630●					NS800●
Breaking performance code	**F**	**N**	**H**	**S**	**L**	**F**	**N**	**H**	**S**	**L**	**L**
440 V	35	50	65	90	130	30	42	65	90	130	130

(2) This setting is a general guidance, Ir and Irm should be adjusted according to motor characteristics and conditions of use.
(3) Applicable also with MicroLogic 6.2 M and 6.3 M trip units.

AC-3 category

Coordination: Thermal magnetic circuit breaker + Contactor

65 to 295 kW at 500 V: type 2 coordination (with TeSys GV4 / GV5 / GV6 circuit breakers)

Standard power ratings of 3-phase motors 50/60 Hz in category AC-3e			Circuit breaker			Contactor
500 V			Product type [1]	Ir setting [2]	Irm [2]	Product type
P	Ie	Iq (max)				
kW	A	kA		A	A	
65	92	30	**GV4P/GV4PE/GV4PEM115●**	93	837	**LC1G115**
65	92	50	**GV5P150●**	100	1300	**LC1G115**
90	128	50	**GV5P150●**	130	1690	**LC1G150**
110	156	50	**GV5P220●**	170	2210	**LC1G185**
132	184	50	**GV5P220●**	185	2405	**LC1G225**
160	224	50	**GV6P320●**	240	3120	**LC1G265**
200	280	50	**GV6P320●**	300	3900	**LC1G330**
250	344	50	**GV6P500●**	350	4550	**LC1G400**
295	405	50	**GV6P500●**	440	5720	**LC1G500**

(1) Product type to be completed by replacing the ● with the breaking performance code:

Rated conditional short-circuit (kA)	GV4P/GV4PE/GV4PEM115●			GV5P150●/ 220●		GV6P320●/ 500●	
Breaking performance code	**B**	**N**	**S**	**F**	**H**	**F**	**H**
500 V	10	25	30	30	50	25	50

65 to 425 kW at 500 V: type 2 coordination (with ComPacT NSX / NS circuit breakers)

Standard power ratings of 3-phase motors 50/60 Hz in category AC-3e			Circuit breaker			Contactor
500 V			Product type [1]	Ir setting [2]	Irm [2]	Product type
P	Ie	Iq (max)				
kW	A	kA		A	A	
65	92	70	**NSX100● + MicroLogic 2.2 M**	95	1235	**LC1G115**
65	92	70	**NSX160● + MicroLogic 2.2 M** [3]	95	1235	**LC1G115**
90	128	70	**NSX160● + MicroLogic 2.2 M** [3]	130	1690	**LC1G150**
110	156	70	**NSX250● + MicroLogic 2.2 M** [3]	170	2210	**LC1G185**
132	184	70	**NSX250● + MicroLogic 2.2 M** [3]	185	2405	**LC1G225**
160	224	70	**NSX400● + MicroLogic 2.3 M** [3]	240	3120	**LC1G265**
200	280	70	**NSX400● + MicroLogic 2.3 M** [3]	300	3900	**LC1G330**
250	344	70	**NSX630● + MicroLogic 2.3 M** [3]	350	4550	**LC1G400**
295	405	70	**NSX630● + MicroLogic 2.3 M** [3]	440	5720	**LC1G500**
375	516	70	**NS800● + MicroLogic 5.0**	560	5040	**LC1G630**
425	584	70	**NS800● + MicroLogic 5.0**	640	5760	**LC1G800**

(1) Product type to be completed by replacing the ● with the breaking performance code:

Rated conditional short-circuit (kA)	NSX100●					NSX160●/ NSX250●					NSX400●/ NSX630●					NS800●
Breaking performance code	**F**	**N**	**H**	**S**	**L**	**F**	**N**	**H**	**S**	**L**	**F**	**N**	**H**	**S**	**L**	**L**
500 V	25	36	50	65	70	30	36	50	65	70	25	30	50	65	70	100

(2) This setting is a general guidance, Ir and Irm should be adjusted according to motor characteristics and conditions of use.
(3) Applicable also with MicroLogic 6.2 M and 6.3 M trip units.

Life Is On Schneider Electric

AC-3 category

Coordination: Thermal magnetic circuit breaker + Contactor

0.06 to 22 kW at 690 V: type 2 coordination

Standard power ratings of 3-phase motors 50/60 Hz in category AC-3			Limiter block	Circuit breaker			Contactor
690 V			Product type	Product type	Ir Setting (1)	Irm (1)	Product type
P	Ie	Iq					
kW	A	kA			A	A	
0.06	0.12	100		**GV2P01**	0.16	1.5	**LC1D09**
0.09	0.17	100		**GV2P02**	0.25	2.4	**LC1D09**
0.12	0.23	100		**GV2P02**	0.25	2.4	**LC1D09**
0.18	0.35	100		**GV2P03**	0.4	5	**LC1D09**
0.25	0.49	100		**GV2P04**	0.63	8	**LC1D09**
0.37	0.64	100		**GV2P05**	1	13	**LC1D09**
0.55	0.87	100		**GV2P05**	1	13	**LC1D09**
0.75	1.1	100		**GV2P06**	1.6	22.5	**LC1D09**
1.1	1.6	65	**LA9LB920**	**GV2P07**	1.6	22.5	**LC1D25**
1.5	2.1	65	**LA9LB920**	**GV2P07**	2.5	33.5	**LC1D25**
2.2	2.8	65	**LA9LB920**	**GV2P08**	4	51	**LC1D25**
3	3.8	65	**LA9LB920**	**GV2P08**	4	51	**LC1D25**
4	4.9	65	**LA9LB920**	**GV2P10**	6.3	78	**LC1D25**
5.5	6.7	65	**LA9LB920**	**GV2P14**	10	138	**LC1D25**
7.5	8.9	65	**LA9LB920**	**GV2P14**	10	138	**LC1D25**
9	12.8	65	**LA9LB920**	**GV2P16**	14	170	**LC1D25**
11	12.8	65	**LA9LB920**	**GV2P16**	14	170	**LC1D25**
15	17	65	**LA9LB920**	**GV2P20**	18	223	**LC1D25**
18.5	21	65	**LA9LB920**	**GV2P21**	23	327	**LC1D32**
22	24	65	**LA9LB920**	**GV2P32**	32	416	**LC1D40A**

(1) This setting is a general guidance, Ir and Irm should be adjusted according to motor characteristics and conditions of use.

30 to 560 kW at 690 V: type 2 coordination (with ComPacT NSX/NS circuit breakers)

Standard power ratings of 3-phase motors 50/60 Hz in category AC-3e			Circuit breaker			Contactor
690 V			Product type (1)	Ir Setting (2)	Irm (2)	Product type
P	Ie	Iq (max)				
kW	A	kA		A	A	
30	32	100	**NSX100● + MicroLogic 2.2 M**	36	468	**LC1G115**
37	39	100	**NSX100● + MicroLogic 2.2 M**	40	520	**LC1G115**
45	47	100	**NSX100● + MicroLogic 2.2 M**	50	650	**LC1G115**
55	57	100	**NSX100● + MicroLogic 2.2 M**	60	780	**LC1G115**
75	77	100	**NSX100● + MicroLogic 2.2 M**	80	1040	**LC1G115**
90	93	100	**NSX250● + MicroLogic 2.2 M (3)**	95	1235	**LC1G150**
110	113	100	**NSX250● + MicroLogic 2.2 M (3)**	115	1495	**LC1G185**
132	134	100	**NSX250● + MicroLogic 2.2 M (3)**	140	1820	**LC1G225**
160	162	100	**NSX250● + MicroLogic 2.2 M (3)**	170	2210	**LC1G225**
200	203	100	**NSX250● + MicroLogic 2.2 M (3)**	210	2730	**LC1G265**
220	223	100	**NSX400● + MicroLogic 2.3 M (3)**	240	3120	**LC1G330**
250	250	100	**NSX400● + MicroLogic 2.3 M (3)**	260	3380	**LC1G400**
315	313	100	**NSX630● + MicroLogic 2.3 M (3)**	320	4160	**LC1G400**
335	335	100	**NSX630● + MicroLogic 2.3 M (3)**	350	4550	**LC1G500**
355	354	100	**NSX630● + MicroLogic 2.3 M (3)**	380	4940	**LC1G500**
375	374	100	**NSX630● + MicroLogic 2.3 M (3)**	380	4940	**LC1G630**
400	400	100	**NSX630● + MicroLogic 2.3 M (3)**	440	5720	**LC1G630**
450	455	100	**NSX630● + MicroLogic 2.3 M (3)**	470	6110	**LC1G630**
475	475	100	**NSX630● + MicroLogic 2.3 M (3)**	500	6500	**LC1G630**
500	493	100	**NSX630● + MicroLogic 2.3 M (3)**	500	6500	**LC1G630**
560	551	75	**NS800● + MicroLogic 5.0**	560	7280	**LC1G800**

(1) Product type to be completed by replacing the ● with the breaking performance code:

Rated conditional short-circuit (kA)	NSX100●/ NSX250●/ NSX400●/ NSX630●		NS800●
Breaking performance code	**HB1**	**HB2**	**LB**
690 V	75	100	75

(2) This setting is a general guidance, Ir and Irm should be adjusted according to motor characteristics and conditions of use.
(3) Applicable also with MicroLogic 6.2 E-M and 6.3 E-M trip units.

Coordination (UL): Thermal magnetic circuit breaker + Contactor

½ to 80 hp at 460 V - 3P

GV2P + contactor: compact, high SCCR solution.
GV3P + contactor: medium power, Everlink (long lasting power connection).
GV4PB + contactor: high power, advanced protection settings, Everlink (long lasting power connection), 18 (GV4PB●●●B), 35 (GV4PB●●●N) or 65 (GV4PB●●●S) kA SCCR.

Standard power ratings						Circuit breaker		Contactor		Circuit breaker		Contactor		Circuit breaker		Contactor	
200 V 3P		230 V 3P		460 V 3P		Product reference (2)	Dial range	Product reference (3)	Comb. SCCR 480Y	Product reference (4)	Dial range	Product reference (3)	Comb. SCCR 480Y	Product reference	Dial range	Product reference (3)	SCCR 480Y As applied
HP	FLA (1)	HP	FLA (1)	HP	FLA (1)												
							A		kA		A		kA		A		kA
				½	1.1	**GV2P06**	1 to 1.6	**LC1D09**	100					**GV4PB02S**	0.8 to 2	**LC1D09**	65
				¾	1.6	**GV2P06**	1 to 1.6	**LC1D09**	100					**GV4PB02S**	0.8 to 2	**LC1D09**	65
½	2.5	½	2.2	1	2.1	**GV2P07**	1.6 to 2.5	**LC1D09**	100					**GV4PB03S**	1.4 to 3.5	**LC1D09**	65
				1½	3	**GV2P08**	2.5 to 4	**LC1D09**	100					**GV4PB03S**	1.4 to 3.5	**LC1D09**	65
¾	3.7	¾	3.2	2	3.4	**GV2P08**	2.5 to 4	**LC1D09**	100					**GV4PB07S**	2.9 to 7	**LC1D09**	65
1	4.6	1	4.2	3	4.8	**GV2P10**	4 to 6.3	**LC1D09**	100					**GV4PB07S**	2.9 to 7	**LC1D09**	65
		1½	6			**GV2P10**	4 to 6.3	**LC1D09**	100					**GV4PB12S**	5 to 12.5	**LC1D12**	65
1½	6.9	2	6.8			**GV2P14**	6 to 10	**LC1D12**	100					**GV4PB12S**	5 to 12.5	**LC1D12**	65
2	7.8			5	7.6	**GV2P14**	6 to 10	**LC1D12**	100					**GV4PB12S**	5 to 12.5	**LC1D12**	65
		3	9.6			**GV2P14**	6 to 10	**LC1D12**	100	**GV3P13**	9 to 13	**LC1D18**	65	**GV4PB12S**	5 to 12.5	**LC1D12**	65
3	11			7½	11	**GV2P16**	9 to 14	**LC1D18**	50 (5)	**GV3P13**	9 to 13	**LC1D18**	65	**GV4PB25S**	10 to 25	**LC1D25**	65
				10	14	**GV2P16**	9 to 14	**LC1D18**	50 (5)	**GV3P18**	12 to 18	**LC1D18**	65	**GV4PB25S**	10 to 25	**LC1D25**	65
5	17.5	5	15.2			**GV2P20**	13 to 18	**LC1D18**	50 (5)	**GV3P18**	12 to 18	**LC1D18**	65	**GV4PB25S**	10 to 25	**LC1D25**	65
		7½	22	15	21	**GV2P21**	17 to 23	**LC1D25**	50 (5)	**GV3P25**	17 to 25	**LC1D25**	65	**GV4PB25S**	10 to 25	**LC1D25**	65
7½	25.3					**GV2P22**	20 to 25	**LC1D25**	50 (5)	**GV3P32**	23 to 32	**LC1D32**	65	**GV4PB50S**	20 to 50	**LC1D50A**	65
		10	28	20	27					**GV3P32**	23 to 32	**LC1D32**	65	**GV4PB50S**	20 to 50	**LC1D50A**	65
10	32.2			25	34					**GV3P40**	30 to 40	**LC1D40A**	65	**GV4PB50S**	20 to 50	**LC1D50A**	65
		15	42	30	40					**GV3P50**	37 to 50	**LC1D50A**	65	**GV4PB50S**	20 to 50	**LC1D50A**	65
15	48									**GV3P65**	48 to 65	**LC1D65A**	65	**GV4PB50S**	20 to 50	**LC1D50A**	65
		20	54	40	52					**GV3P65**	48 to 65	**LC1D65A**	65	**GV4PB80S**	40 to 80	**LC1D80**	65
20	62.1													**GV4PB115S**	40 to 80	**LC1D80**	65
25	78.2	25	68	50	65									**GV4PB115S**	40 to 80	**LC1D80**	65
30	92	30	80	60	77									**GV4PB115S**	65 to 115	**LC1D115**	65

(1) Motor Full Load Amp Sizes are based on NEC Table 430.250.
(2) Requires use of GV1G09 or GV2GH7 line spacer for Type F rating.
(3) Add coil suffix to complete reference part number. For example, an LC1D09G7 includes a 120 V AC coil.
(4) Requires use of GV3G66 line spacer and GVAM11 short-circuit signaling contact for Type F rating.
(5) SCCR is 42 kA at 480Y when using GV2G busbar links.

Life Is On Schneider Electric

AC-3 category

Coordination: Magnetic circuit breaker + Contactor + Overload relay

0.06 to 30 kW at 400/415, 440 and 500 V: type 1 coordination

Standard power ratings of 3-phase motors 50/60 Hz in category AC-3									Circuit breaker			Contactor	Thermal overload relay	
400/415 V			440 V			500 V			Reference	Rating	Irm (1)	Reference (2)	Reference	Setting range
P	Ie	Iq	P	Ie	Iq	P	Ie	Iq						
kW	A	kA	kW	A	kA	kW	A	kA		A	A			A
0.06	0.2	50	**0.06**	0.19	50	–	–	–	**GV2LE03**	0.4	5	**LC1K06**	**LR2K0302**	0.16…0.23
–	–	–	**0.09**	0.28	50	–	–	–	**GV2LE03**	0.4	5	**LC1K06**	**LR2K0303**	0.23…0.36
0.09	0.3	50	**0.12**	0.37	50	–	–	–	**GV2LE03**	0.4	5	**LC1K06**	**LR2K0304**	0.36…0.54
0.12	0.44	50				–	–	–	**GV2LE04**	0.63	8	**LC1K06**	**LR2K0304**	0.36…0.54
0.18	0.6	50	**0.18**	0.55	50	–	–	–	**GV2LE04**	0.63	8	**LC1K06**	**LR2K0305**	0.54…0.8
–	–	–	**0.25**	0.76	50	–	–	–	**GV2LE05**	1	13	**LC1K06**	**LR2K0305**	0.54…0.8
0.25 **0.37**	0.85 1.1	50 50	– **0.37**	– 1	– 50	– **0.37**	– 0.88	– 50	**GV2LE05**	1	13	**LC1K06**	**LR2K0306**	0.8…1.2
0.55 –	1.5 –	50 –	**0.55** –	1.36 –	50 –	**0.55** **0.75**	1.2 1.5	50 50	**GV2LE06**	1.6	22.5	**LC1K06**	**LR2K0307**	1.2…1.8
–	–	–	**0.75**	1.68	50	–	–	–	**GV2LE07**	2.5	33.5	**LC1K06**	**LR2K0307**	1.2…1.8
0.75 **1.1**	1.9 2.7	50 50	– **1.1**	– 2.37	– 50	– **1.1**	– 2.2	– 50	**GV2LE07**	2.5	33.5	**LC1K06**	**LR2K0308**	1.8…2.6
1.5	3.6	50	**1.5**	3.06	50	**1.5**	2.9	50	**GV2LE08**	4	51	**LC1K06**	**LR2K0310**	2.6…3.7
–	–	–	–	–	–	**2.2**	3.9	50	**GV2LE08**	4	51	**LC1K06**	**LR2K0312**	3.7…5.5
2.2	4.9	50	**2.2**	4.4	50	**3**	5.2	50	**GV2LE10**	6.3	78	**LC1K06**	**LR2K0312**	3.7…5.5
–	–	–	**3**	5.77	50	–	–	–	**GV2LE10**	6.3	78	**LC1K06**	**LR2K0314**	5.5…8
–	–	–	**4**	7.9	15	–	–	–	**GV2LE14**	10	138	**LC1K09**	**LR2K0314**	5.5…8
3	6.5	50	–	–	–	**4**	6.8	10	**GV2LE14**	10	138	**LC1K09**	**LR2K0314**	5.5…8
4	8.5	50	–	–	–	–	–	–	**GV2LE14**	10	138	**LC1K09**	**LR2K0316**	8…11.5
5.5	11.5	15	**5.5**	10.4	8	**7.5**	12.4	6	**GV2LE16**	14	170	**LC1K12**	**LR2K0321**	10…14
–	–	–	**7.5**	13.7	8	**9**	13.9	6	**GV2LE16**	14	170	**LC1D18**	**LRD21**	12…18
7.5	15.5	15	**9**	16.9	8	–	–	–	**GV2LE20**	18	223	**LC1D18**	**LRD21**	12…18
9	18.1	15	–	–	–	**11**	17.6	4	**GV2LE22**	25	327	**LC1D25**	**LRD22**	16…24
11	22	15	**11**	20.1	6	**15**	23	4	**GV2LE22**	25	327	**LC1D25**	**LRD22**	16…24
15	29	10	**15**	26.5	6	**18.5**	28	4	**GV2LE32**	32	416	**LC1D32**	**LRD32**	23…32
18.5	35	50	**18.5**	32.5	50	**22**	33	10	**GV3L40**	40	560	**LC1D40A**	**LRD340**	30…40
22	41	50	**22**	39	50	**30**	44	10	**GV3L50**	50	700	**LC1D50A**	**LRD350**	37…50

(1) Irm: setting current of the magnetic trip.
(2) For reversing operation, replace the prefix LC1 with LC2.

AC-3 category

Coordination: Magnetic circuit breaker + Contactor + Overload relay

30 to 90 kW at 400/415, 440 and 500 V: type 1 coordination

Standard power ratings of 3-phase motors 50/60 Hz in category AC-3									Circuit breaker			Contactor	Thermal overload relay	
400/415 V			440 V			500 V			Reference	Rating	Irm (1)	Reference (2)	Reference	Setting range
P	Ie	Iq	P	Ie	Iq	P	Ie	Iq						
kW	A	kA	kW	A	kA	kW	A	kA		A	A			A
30	55	50	**30**	51.5	50	**37**	53	10	**GV3L65**	65	910	**LC1D65A**	**LRD365**	48…65
–	–	–	**37**	64	50	**37**	53	10	**GV3L65**	65	910	**LC1D65A**	**LRD365**	48…65
–	–	–	–	–	–	**45**	64	50	**GV3L65**	65	910	**LC1D80**	**LRD3361**	55...70
37	66	50	–	–	–	–	–	–	**GV3L73**	73	1120	**LC1D80A**	**LRD380**	62...80
–	–	–	**37**	64	70	–	–	–	**GV4L80**	80	880	**LC1D65A**	**LRD365**	48…65
–	–	–	–	–	–	**45**	64	30	**GV4L80**	80	880	**LC1D80**	**LRD3361**	55...70
37	66	100	–	–	–	–	–	–	**GV4L80**	80	1040	**LC1D80**	**LRD3361**	55...70
–	–	–	**45**	76	70	**55**	78	30	**GV4L80**	80	1040	**LC1D80**	**LRD3363**	63…80
45	80	100	–	–	–	–	–	–	**GV4L115**	115	1380	**LC1D95**	**LRD3365**	80…104
–	–	–	–	–	–	**75**	106	30	**GV4L115**	115	1380	**LC1D115**	**LRD4367**	95…120
–	–	–	**55**	90	70	–	–	–	**GV4L115**	115	1380	**LC1D115**	**LRD4365**	80…104
55	97	100	–	–	–	–	–	–	**GV4L115**	115	1495	**LC1D115**	**LRD4367**	95…120
–	–	–	–	–	–	**50**	90	(3)	**NSX100●MA** (3)	100	1200	**LC1D115**	**LRD4365**	80…104
–	–	–	–	–	–	**75**	106	(3)	**NSX160●MA** (3)	150	1500	**LC1D115**	**LRD4367**	95…120
55	97	(3)	–	–	–	–	–	–	**NSX160●MA** (3)	150	1350	**LC1D115**	**LRD4367**	95…120
75 (4)	132	(3)	**75** (4)	125	(3)	**90** (4)	128	(3)	**NSX160●MA** (3)	150	1800	**LC1D150**	**LRD4369**	110…140

(1) Irm: setting current of the magnetic trip.
(2) For reversing operation, replace the prefix LC1 with LC2.
(3) Reference to be completed by replacing the ● with the breaking performance code:

Breaking performance Iq (kA)	NSX100●MA		NSX160●MA and NSX250●MA		NSX400● and NSX630●	
400/415 V	36	70	36	70	70	150
440 V	35	65	35	65	65	130
500 V	25	50	25	50	50	70
660/690 V	8	10	8	10	20	20
Code	**F**	**H**	**F**	**H**	**H**	**L**

(4) Please refer to Type 2 coordination tables for higher ratings.

Life Is On Schneider Electric

AC-3 category

Coordination: Magnetic circuit breaker + Contactor + Overload relay

0.06 to 18.5 kW at 400/415, 440 and 500 V: type 2 coordination

Standard power ratings of 3-phase motors 50/60 Hz in category AC-3									Circuit breaker			Contactor	Thermal overload relay	
400/415 V			440 V			500 V			Reference	Rating	Irm (1)	Reference (2)	Reference	Setting range
P	Ie	Iq	P	Ie	Iq	P	Ie	Iq						
kW	A	kA	kW	A	kA	kW	A	kA		A	A			A
0.06	0.2	130	**0.06**	0.19	130	**–**	–	–	**GV2L03** or **LE03**	0.4	5	**LC1D09**	**LRD02**	0.16…0.25
0.09	0.3	130	**0.09**	0.28	130	**–**	–	–	**GV2L03** or **LE03**	0.4	5	**LC1D09**	**LRD03**	0.25…0.40
–	–	–	**0.12**	0.37	130	**–**	–	–						
0.12	0.44	130	**–**	–	–	**–**	–	–	**GV2L04** or **LE04**	0.63	8	**LC1D09**	**LRD04**	0.4…0.63
0.18	0.6	130	**0.18**	0.55	130	**–**	–	–						
0.25	0.85	130	**0.25**	0.76	130	**–**	–	–	**GV2L05** or **LE05**	1	13	**LC1D09**	**LRD05**	0.63…1
0.37	1.1	130	**0.37**	0.99	130	**–**	–	–						
–	–	–	**–**	–	–	**0.37**	0.88	130	**GV2L05** or **LE05**	1	13	**LC1D09**	**LRD06**	1…1.7
0.55	1.5	130	**–**	–	–	**0.55**	1.2	130	**GV2L06** or **LE06**	1.6	22.5	**LC1D09**	**LRD06**	1…1.7
–	–	–	**0.55**	1.36	130	**0.75**	1.5	130						
0.75	1.9	130	**0.75**	1.68	130	**1.1**	2.2	130	**GV2L07** or **LE07**	2.5	33.5	**LC1D09**	**LRD07**	1.6…2.5
1.1	2.7	130	**1.1**	2.37	130	**1.5**	2.9	130	**GV2L08** or **LE08**	4	51	**LC1D09**	**LRD08**	2.5…4
1.5	3.6	130	**–**	–	–	**2.2**	3.9	130						
–	–	–	**1.5**	3.06	130	**–**	–	–	**GV2L08** or **LE08**	4	51	**LC1D09**	**LRD10**	4…6
2.2	4.9	130	**–**	–	–	**–**	–	–	**GV2L10** or **LE10**	6.3	78	**LC1D09**	**LRD10**	4…6
–	–	–	**–**	–	–	**3**	5.2	13						
–	–	–	**2.2**	4.42	50	**–**	–	–	**GV2LE10**	6.3	78	**LC1D09**	**LRD10**	4…6
–	–	–	**3**	5.77	50	**3**	5.2	50						
–	–	–	**2.2**	4.42	130	**–**	–	–	**GV2L10**	6.3	78	**LC1D09**	**LRD10**	4…6
–	–	–	**3**	5.77	130	**3**	5.2	130						
3	6.5	130	**–**	–	–	**–**	–	–	**GV2L14** or **LE14**	10	10	**LC1D09**	**LRD12**	5.5…8
–	–	–	**–**	–	–	**4**	6.8	10	**GV2LE14**	10	138	**LC1D12**	**LRD12**	5.5…8
–	–	–	**–**	–	–	**4**	6.8	50	**GV2L14**	10	138	**LC1D12**	**LRD12**	5.5…8
4	8.5	130	**–**	–	–	**–**	–	–	**GV2L14** or **LE14**	10	138	**LC1D09**	**LRD14**	7…10
–	–	–	**4**	7.9	15	**–**	–	–	**GV2LE14**	10	138	**LC1D09**	**LRD14**	7…10
–	–	–	**4**	7.9	130	**–**	–	–	**GV2L14**	10	138	**LC1D09**	**LRD14**	7…10
–	–	–	**–**	–	–	**5.5**	9.2	10	**GV2LE14**	10	138	**LC1D09**	**LRD14**	7…10
–	–	–	**–**	–	–	**5.5**	9.2	50	**GV2L14**	10	138	**LC1D09**	**LRD14**	7…10
5.5	11.5	130	**5.5**	10.4	50	**7.5**	12.4	42	**GV2L16**	14	170	**LC1D25**	**LRD16**	9…13
–	–	–	**7.5**	13.7	50	**–**	–	–	**GV2L16**	14	170	**LC1D25**	**LRD21**	12…18
7.5	15.5	50	**9**	16.9	20	**9**	13.9	10	**GV2L20**	18	223	**LC1D25**	**LRD21**	12…18
9	18.1	50	**–**	–	–	**–**	–	–	**GV2L22**	25	327	**LC1D25**	**LRD22**	16…24
11	22	50	**11**	20.1	20	**–**	–	–						
–	–	–	**–**	–	–	**11**	17.6	10	**GV2L22**	25	327	**LC1D32**	**LRD22**	16…24
–	–	–	**–**	–	–	**15**	23	10						
15	29	50	**15**	26.5	50	**–**	–	–	**GV3L32**	32	448	**LC1D40A**	**LRD332**	23…32
–	–	–	**–**	–	–	**18.5**	28	10	**GV3L32**	32	448	**LC1D65A**	**LRD332**	23…32

(1) Irm: setting current of the magnetic trip.
(2) For reversing operation, replace the prefix LC1 with LC2.

AC-3 category

Coordination: Magnetic circuit breaker + Contactor + Overload relay

0.18 to 22 kW at 690 V: type 2 coordination

Standard power ratings of 3-phase motors 50/60 Hz in category AC-3			Limiter block	Circuit breaker			Contactor	Thermal overload relay	
690 V			Product type	Product type	Ir setting (1)	Irm (1)	Product type	Product type	Setting range
P	Ie	Iq							
kW	A	kA			A	A			A
0.18	0.35	100	–	**GV2L03**	0.4	5	**LC1D09**	**LRD03**	0.25...0.4
0.25	0.49	100	–	**GV2L04**	0.63	8	**LC1D09**	**LRD04**	0.4…0.63
0.37	0.64	100	–	**GV2L05**	1	13	**LC1D09**	**LRD05**	0.63…1
0.55	0.87	100	–	**GV2L05**	1	13	**LC1D09**	**LRD05**	0.63…1
0.75	1.1	100	–	**GV2L06**	1.6	22.5	**LC1D09**	**LRD06**	1…1.6
1.1	1.6	100	–	**GV2L06**	1.6	22.5	**LC1D09**	**LRD06**	1…1.6
1.5	2.1	65	**LA9LB920** (2)	**GV2L07**	2.5	33.5	**LC1D25**	**LRD07**	1.6…2.5
2.2	2.8	65	**LA9LB920** (2)	**GV2L08**	4	51	**LC1D25**	**LRD08**	2.5…4
3	3.8	65	**LA9LB920** (2)	**GV2L08**	4	51	**LC1D25**	**LRD08**	2.5…4
4	4.9	65	**LA9LB920** (2)	**GV2L10**	6.3	78	**LC1D25**	**LRD10**	4…6
5.5	6.7	65	**LA9LB920** (2)	**GV2L14**	10	138	**LC1D32**	**LRD12**	5.5…8
7.5	8.9	65	**LA9LB920** (2)	**GV2L14**	10	138	**LC1D32**	**LRD14**	7…10
9	10.6	65	**LA9LB920** (2)	**GV2L16**	14	170	**LC1D32**	**LRD16**	9…13
11	12.8	65	**LA9LB920** (2)	**GV2L16**	14	170	**LC1D32**	**LRD16**	9…13
15	17	65	**LA9LB920** (2)	**GV2L20**	18	223	**LC1D32**	**LRD21**	12…18
18.5	21	65	**LA9LB920** (2)	**GV2L22**	25	327	**LC1D32**	**LRD22**	16…24
22	24	65	**LA9LB920** (2)	**GV2L22**	25	327	**LC1D32**	**LRD32**	23…32
22	24	65	**LA9LB920** (2)	**GV2L32**	32	416	**LC1D40A**	**LRD332**	23…32

(1) This setting is a general guidance, Ir and Irm should be adjusted according to motor characteristics and conditions of use.
*(2) For more information about the current limiter **LA9LB920,** see pages A4/32 and A4/61.*

Life Is On Schneider Electric

AC-3 category

Coordination: Magnetic circuit breaker + Contactor + Overload relay

18.5 to 90 kW at 400/415, 440 and 500 V: type 2 coordination

Standard power ratings of 3-phase motors 50/60 Hz in category AC-3									Circuit breaker			Contactor	Thermal overload relay	
400/415 V			440 V			500 V			Reference	Rating	Irm (1)	Reference (2)	Reference	Setting range
P	Ie	Iq	P	Ie	Iq	P	Ie	Iq						
kW	A	kA	kW	A	kA	kW	A	kA		A	A			A
18.5	35	50	–	–	–	–	–	–	**GV3L40**	40	560	**LC1D50A**	**LRD340**	30…40
–	–	–	**18.5**	32.5	50	–	–	–	**GV3L40**	40	560	**LC1D65A**	**LRD340**	30…40
22	41	50	–	–	–	–	–	–	**GV3L50**	50	700	**LC1D50A**	**LRD350**	37…50
–	–	–	**22**	39	50	**30**	44	10	**GV3L50**	50	700	**LC1D65A**	**LRD350**	37…50
30	55	50	**30**	51.5	50	**37**	53	10	**GV3L65**	65	910	**LC1D65A**	**LRD365**	48…65
37	66	50	–	–	–	–	–	–	**GV3L73**	73	1120	**LC1D80A**	**LRD380**	62...80
45	60	50	–	–	–	–	–	–	**GV3L80**	80	1120	**LC1D95**	**LRD3363**	63...80
–	–	–	**37**	64	70	–	–	–	**GV4L80**	80	880	**LC1D65A**	**LRD365**	48…65
37	66	100	**45**	76	70	(4)	(4)	(4)	**GV4L80**	80	1040	**LC1D80**	**LRD3363**	63…80
45	80	100	**55**	90	70	(4)	(4)	(4)	**GV4L115**	115	1380	**LC1D115**	**LR9D5367**	60…100
55	97	100	–	–	–	(4)	(4)	(4)	**GV4L115**	115	1495	**LC1D115**	**LR9D5369**	90…150
–	–	–	–	–	–	**55**	78	(3)	**NSX100●MA** (3)	100	1040	**LC1D80**	**LRD3363**	63…80
45	80	(3)	**55**	90	(3)	–	–	–	**NSX100●MA** (3)	100	1300	**LC1D115**	**LR9D5367**	60…100
55	97	(3)	–	–	–	–	–	–	**NSX160●MA** (3)	150	1500	**LC1D115**	**LR9D5369**	90…150
–	–	–	–	–	–	**75**	106	(3)	**NSX160●MA** (3)	150	1950	**LC1D115**	**LR9D5369**	90…150
75	132	(3)	**75**	125	(3)	–	–	–	**NSX160●MA** (3)	150	1950	**LC1D150**	**LR9D5369**	90…150
–	–	–	**90**	146	(3)	–	–	–	**NSX160●MA** (3)	150	1950	**LC1D150**	**LR9D5369**	90…150
–	–	–	–	–	–	**90**	128	(3)	**NSX160●MA** (3)	150	1200	**LC1D150**	**LR9D5369**	90…150

(1) Irm: setting current of the magnetic trip.
(2) For reversing operation, replace the prefix LC1 with LC2.
(3) Reference to be completed by replacing the ● with the breaking performance code:

Breaking performance Iq (kA)	NSX100●MA		NSX160●MA and NSX250●MA		NSX400● and NSX630●	
400/415 V	36	70	36	70	70	150
440 V	35	65	35	65	65	130
500 V	25	50	25	50	50	70
660/690 V	8	10	8	10	20	20
Code	**F**	**H**	**F**	**H**	**H**	**L**

(4) Please consult your regional sales office.

AC-3 category

Coordination: Magnetic circuit breaker + Contactor + Overload relay

45 to 335 kW at 400/415 V: type 2 coordination (with TeSys GV4 or ComPacT NSX circuit breakers and LR9G overload relays)

Standard power ratings of 3-phase motors 50/60 Hz in category AC-3e			Circuit breaker		Contactor	Thermal overload relay	
400/415 V			Product type (1)	Irm (2)	Product type	Product type	Ir setting (2)
P	Ie	Iq (max)					
kW	A	kA		A			A
45	80	100	**GV4L/GV4LE115●**	1265	**LC1G115**	**LR9G115**	80
45	80	100	**NSX100● + MA**	1100	**LC1G115**	**LR9G115**	80
55	97	130	**GV4L/GV4LE115●**	1265	**LC1G115**	**LR9G225**	97
55	97	130	**NSX160● + MA**	1500	**LC1G115**	**LR9G225**	97
75	132	130	**NSX160● + MA**	1800	**LC1G150**	**LR9G225**	132
90	160	130	**NSX250● + MA**	2640	**LC1G185**	**LR9G225**	160
110	195	130	**NSX250● + MA**	2640	**LC1G225**	**LR9G225**	195
110	195	130	**NSX400● + MicroLogic 1.3 M**	3520	**LC1G265**	**LR9G500**	195
132	230	130	**NSX400● + MicroLogic 1.3 M**	3520	**LC1G265**	**LR9G500**	230
160	280	130	**NSX400● + MicroLogic 1.3 M**	3840	**LC1G330**	**LR9G500**	280
200	350	130	**NSX630● + MicroLogic 1.3 M**	5500	**LC1G400**	**LR9G500**	350
220	380	130	**NSX630● + MicroLogic 1.3 M**	5500	**LC1G500**	**LR9G500**	380
250	430	130	**NSX630● + MicroLogic 1.3 M**	6000	**LC1G500**	**LR9G500**	430
300	500	130	**NS800● + MicroLogic 5.0 LR OFF**	6400	**LC1G630**	**LR9G630**	500
335	575	130	**NS800● + MicroLogic 5.0 LR OFF**	7200	**LC1G630**	**LR9G630**	575

(1) Product type to be completed by replacing the ● with the breaking performance code:

Rated conditional short-circuit (kA)	GV4L115●/ GV4LE115●			NSX100●/ NSX160●/ NSX250●/ NSX400●/ NSX630●					NS800●
Breaking performance code	**B**	**N**	**S**	**F**	**N**	**H**	**S**	**L**	**L**
400/415 V	25	50	100	36	50	70	100	130	150

55 to 355 kW at 440 V: type 2 coordination (with TeSys GV4 or ComPacT NSX / NS circuit breakers and LR9G overload relays)

Standard power ratings of 3-phase motors 50/60 Hz in category AC-3e			Circuit breaker		Contactor	Thermal overload relay	
440 V			Product type (1)	Irm (2)	Product type	Product type	Ir setting (2)
P	Ie	Iq (max)					
kW	A	kA		A			A
55	88	70	**GV4L/GV4LE115●**	1265	**LC1G115**	**LR9G115**	88
55	88	130	**NSX100● + MA**	1500	**LC1G115**	**LR9G115**	88
75	120	130	**NSX160● + MA**	1800	**LC1G150**	**LR9G225**	120
90	145	130	**NSX160● + MA**	2640	**LC1G150**	**LR9G225**	145
110	177	130	**NSX250● + MA**	2640	**LC1G185**	**LR9G225**	177
132	209	130	**NSX250● + MA**	2860	**LC1G225**	**LR9G225**	209
160	255	130	**NSX400● + MicroLogic 1.3 M**	3520	**LC1G265**	**LR9G500**	255
200	318	130	**NSX400● + MicroLogic 1.3 M**	4160	**LC1G330**	**LR9G500**	318
220	343	130	**NSX630● + MicroLogic 1.3 M**	5500	**LC1G400**	**LR9G500**	343
250	390	130	**NSX630● + MicroLogic 1.3 M**	5500	**LC1G400**	**LR9G500**	390
300	466	130	**NSX630● + MicroLogic 1.3 M**	6500	**LC1G500**	**LR9G500**	466
335	521	130	**NS800● + MicroLogic 5.0 LR OFF**	6400	**LC1G630**	**LR9G630**	521
355	554	130	**NS800● + MicroLogic 5.0 LR OFF**	7200	**LC1G630**	**LR9G630**	554

(1) Product type to be completed by replacing the ● with the breaking performance code:

Rated conditional short-circuit (kA)	GV4L115●/ GV4LE115●			NSX100●/ NSX160●/ NSX250●					NSX400●/ NSX630●					NS800●
Breaking performance code	**B**	**N**	**S**	**F**	**N**	**H**	**S**	**L**	**F**	**N**	**H**	**S**	**L**	**L**
440 V	20	50	70	35	50	65	100	130	30	42	65	100	130	150

(2) This setting is a general guidance, Ir and Irm should be adjusted according to motor characteristics and conditions of use.

Life Is On Schneider Electric

AC-3 category

Coordination: Magnetic circuit breaker + Contactor + Overload relay

65 to 425 kW at 500 V: type 2 coordination (with TeSys GV4 or ComPacT NSX / NS circuit breakers and LR9G overload relays)

Standard power ratings of 3-phase motors 50/60 Hz in category AC-3e			Circuit breaker		Contactor	Thermal overload relay	
500 V			Product type (1)	Irm (2)	Product type	Product type	Ir setting (2)
P	Ie	Iq (max)					
kW	A	kA		A			A
65	92	30	**GV4L/GV4LE115●**	1265	**LC1G115**	**LR9G115**	92
65	92	70	**NSX100● + MA100**	1300	**LC1G115**	**LR9G115**	92
90	128	70	**NSX160● + MA150**	1950	**LC1G150**	**LR9G225**	128
110	156	70	**NSX250● + MA220**	2200	**LC1G185**	**LR9G225**	156
132	184	70	**NSX400● + MicroLogic 1.3 M**	2560	**LC1G225**	**LR9G225**	184
160	224	70	**NSX400● + MicroLogic 1.3 M**	3200	**LC1G265**	**LR9G500**	224
200	280	70	**NSX400● + MicroLogic 1.3 M**	3840	**LC1G330**	**LR9G500**	280
250	344	70	**NSX630● + MicroLogic 1.3 M**	5500	**LC1G400**	**LR9G500**	344
295	405	70	**NSX630● + MicroLogic 1.3 M**	6500	**LC1G500**	**LR9G500**	405
375	516	70	**NS800● + MicroLogic 5.0 LR OFF**	6400	**LC1G630**	**LR9G630**	516
425	584	70	**NS800● + MicroLogic 5.0 LR OFF**	7200	**LC1G800**	**LR9G630**	584

(1) Product type to be completed by replacing the ● with the breaking performance code:

Rated conditional short-circuit (kA)	GV4L115●/ GV4LE115●			NSX100●					NSX160●/ NSX250●					NSX400●/ NSX630●					NS800●
Breaking performance code	B	N	S	F	N	H	S	L	F	N	H	S	L	F	N	H	S	L	L
500 V	10	25	30	25	36	50	65	70	30	36	50	65	70	25	30	50	65	70	100

(2) This setting is a general guidance, Ir and Irm should be adjusted according to motor characteristics and conditions of use.

AC-3 category

Coordination: Magnetic circuit breaker + Contactor + Overload relay

0.06 to 30 kW at 400/415 and 690 V: type 2 coordination

Standard power ratings of 3-phase motors 50/60 Hz in category AC-3						Circuit breaker			Contactor	Electronic thermal overload relay	
400/415 V			690 V			Reference	Rating	Irm	Reference	Reference	Setting range
P	Ie	Iq	P	Ie	Iq						
kW	A	kA	kW	A	kA		A	A			A
0.06	0.2	100	**–**	–	–	**GV2L03**	0.4	5	**LC1D09**	**LR9D01**	0.1…0.5
0.09	0.3	100	**–**	–	–	**GV2L03**	0.4	5	**LC1D09**	**LR9D01**	0.1…0.5
0.12	0.44	100	**–**	–	–	**GV2L04**	0.63	8	**LC1D18**	**LR9D02**	0.4…2.0
0.18	0.6	100	**–**	–	–	**GV2L04**	0.63	8	**LC1D18**	**LR9D02**	0.4…2.0
0.25	0.85	100	**–**	–	–	**GV2L05**	1	13	**LC1D18**	**LR9D02**	0.4…2.0
0.37	1.1	100	**–**	–	–	**GV2L05**	1	13	**LC1D18**	**LR9D02**	0.4…2.0
0.55	1.5	100	**–**	–	–	**GV2L06**	1.6	22.5	**LC1D18**	**LR9D02**	0.4…2.0
0.75	1.9	100	**–**	–	–	**GV2L07**	2.5	33.5	**LC1D18**	**LR9D08**	1.6…8.0
1.1	2.7	100	**–**	–	–	**GV2L08**	4	51	**LC1D18**	**LR9D08**	1.6…8.0
1.5	3.6	100	**–**	–	–	**GV2L08**	4	51	**LC1D18**	**LR9D08**	1.6…8.0
2.2	4.9	100	**–**	–	–	**GV2L10**	6.3	78	**LC1D18**	**LR9D08**	1.6…8.0
3	6.5	100	**–**	–	–	**GV2L14**	10	138	**LC1D25**	**LR9D32**	6.4…32
4	8.5	100	**–**	–	–	**GV2L14**	10	138	**LC1D25**	**LR9D32**	6.4…32
5.5	11.5	100	**–**	–	–	**GV2L16**	14	170	**LC1D25**	**LR9D32**	6.4…32
7.5	15.5	50	**–**	–	–	**GV2L20**	18	223	**LC1D25**	**LR9D32**	6.4…32
11	22	50	**–**	–	–	**GV2L22**	25	327	**LC1D25**	**LR9D32**	6.4…32
15	29	50	**–**	–	–	**GV3L32**	40	448	**LC1D65A**	**LR9D110S**	22…110
18.5	35	50	**–**	–	–	**GV3L40**	40	560	**LC1D65A**	**LR9D110S**	22…110
22	41	50	**–**	–	–	**GV3L50**	50	700	**LC1D65A**	**LR9D110S**	22…110
30	55	50	**–**	–	–	**GV3L65**	65	910	**LC1D65A**	**LR9D110S**	22…110
–	–	–	**0.37**	0.64	50	**GV2L05**	1	13	**LC1D09**	**LR9D02**	0.4…2.0
–	–	–	**0.55**	0.87	50	**GV2L05**	1	13	**LC1D09**	**LR9D02**	0.4…2.0
–	–	–	**0.75**	1.1	50	**GV2L06**	1.6	22.5	**LC1D09**	**LR9D02**	0.4…2.0
–	–	–	**1.1**	1.6	50	**GV2L07 + LA9LB920** (1)	2.5	33.5	**LC1D25**	**LR9D08**	1.6…8.0
–	–	–	**1.5**	2.1	50	**GV2L07 + LA9LB920** (1)	2.5	33.5	**LC1D25**	**LR9D08**	1.6…8.0
–	–	–	**2.2**	2.8	50	**GV2L08 + LA9LB920** (1)	4	51	**LC1D25**	**LR9D08**	1.6…8.0
–	–	–	**3**	4	50	**GV2L08 + LA9LB920** (1)	4	51	**LC1D25**	**LR9D08**	1.6…8.0
–	–	–	**4**	5	50	**GV2L10 + LA9LB920** (1)	6.3	78	**LC1D25**	**LR9D08**	1.6…8.0
–	–	–	**5.5**	7	50	**GV2L14 + LA9LB920** (1)	10	138	**LC1D25**	**LR9D32**	6.4…32
–	–	–	**7.5**	8.9	50	**GV2L14 + LA9LB920** (1)	10	138	**LC1D25**	**LR9D32**	6.4…32
–	–	–	**11**	13	3	**GV2L16 + LA9LB920** (1)	14	252	**LC1D32**	**LR9D32**	6.4…32
–	–	–	**15**	16.5	3	**GV2L22 + LA9LB920** (1)	18	327	**LC1D32**	**LR9D32**	6.4…32
–	–	–	**18.5**	21	3	**GV3L25 + LA9LB920** (1)	25	350	**LC1D65A**	**LR9D32**	6.4…32
–	**–**	**–**	**22**	25	3	**GV2L32 + LA9LB920** (1)	32	416	**LC1D65A**	**LR9D32**	6.4…32

*(1) For more information about the current limiter **LA9LB920**, see pages A4/32 and A4/61.*

Life Is On Schneider Electric

AC-3 category

Coordination: Magnetic circuit breaker + Contactor + Overload relay

30 to 500 kW at 690 V: type 2 coordination (with ComPacT NSX/NS circuit breakers and LR9G overload relays)

Standard power ratings of 3-phase motors 50/60 Hz in category AC-3e			Circuit breaker		Contactor	Thermal overload relay	
690 V			Product type (1)	Irm (2)	Product type	Product type	Ir setting (2)
P	Ie	Iq (max)					
kW	A	kA		A			A
30	32	100	**NSX100● + MA**	550	**LC1G115**	**LR9G115**	32
37	39	100	**NSX100● + MA**	550	**LC1G115**	**LR9G115**	39
45	47	100	**NSX100● + MA**	650	**LC1G115**	**LR9G115**	47
55	57	100	**NSX100● + MA**	1100	**LC1G115**	**LR9G115**	57
75	77	100	**NSX100● + MA**	1100	**LC1G115**	**LR9G225**	77
90	93	100	**NSX250● + MA**	1650	**LC1G150**	**LR9G225**	93
110	113	100	**NSX250● + MA**	1650	**LC1G185**	**LR9G225**	113
132	134	100	**NSX250● + MA**	1800	**LC1G225**	**LR9G225**	134
160	162	100	**NSX250● + MA**	2420	**LC1G225**	**LR9G225**	162
200	203	100	**NSX250● + MA**	2640	**LC1G265**	**LR9G500**	203
220	223	100	**NSX400● + MicroLogic 1.3 M**	3520	**LC1G330**	**LR9G500**	223
250	250	100	**NSX400● + MicroLogic 1.3 M**	3520	**LC1G400**	**LR9G500**	250
315	313	100	**NSX630● + MicroLogic 1.3 M**	5500	**LC1G400**	**LR9G500**	313
335	335	100	**NSX630● + MicroLogic 1.3 M**	5500	**LC1G500**	**LR9G500**	335
355	354	100	**NSX630● + MicroLogic 1.3 M**	5500	**LC1G500**	**LR9G500**	354
375	374	100	**NSX630● + MicroLogic 1.3 M**	5500	**LC1G630**	**LR9G630**	374
400	400	100	**NSX630● + MicroLogic 1.3 M**	5500	**LC1G630**	**LR9G630**	400
450	455	100	**NSX630● + MicroLogic 1.3 M**	6000	**LC1G630**	**LR9G630**	455
475	475	100	**NSX630● + MicroLogic 1.3 M**	6500	**LC1G630**	**LR9G630**	475
500	493	100	**NSX630● + MicroLogic 1.3 M**	6500	**LC1G630**	**LR9G630**	493

(1) Product type to be completed by replacing the ● with the breaking performance code:

Rated conditional short-circuit (kA)	NSX100●/ NSX250●/ NSX400●/ NSX630●	
Breaking performance code	**HB1**	**HB2**
690 V	75	100

(2) This setting is a general guidance, Ir and Irm should be adjusted according to motor characteristics and conditions of use.

AC-3 category

Coordination: Star-Delta with NFC or DIN fuses + Contactors + Overload relay

22 to 132 kW at 400/415 and 440 V: type 1 coordination

Maximum operating rate: LC3K: 12 starts/hour; LC3D: 30 starts/hour.
Maximum starting time: LC3K and LC3D: 30 seconds.

Standard power ratings of 3-phase motors 50/60 Hz in category AC-3								Fuse carrier (basic block)	aM fuses		Star-Delta contactors	Thermal overload relay	
400/415 V				440 V				Reference	Size	Rating	Reference	Reference	Setting range
P	Ie	IrD (1)	Iq	P	Ie	IrD (1)	Iq						
kW	A	A	kA	kW	A	A	kA			A			A
–	–	–	–	**22**	39	23	100	**GS●J**	22 x 58	50	**LC3D18A**	**LRD22**	16…24
22	42	24	100	–	–	–	–	**GS●J**	22 x 58	50	**LC3D32A**	**LRD32**	23…32
–	–	–	–	**30**	51.5	30	100	**GS●J**	22 x 58	63	**LC3D32A**	**LRD32**	23…32
30	57	33	100	**37**	64	37	100	**GS●J**	22 x 58	80	**3 x LC1D40A**	**LRD340**	30…40
37	69	40	100	–	–	–	–	**GS●J**	22 x 58	80	**3 x LC1D40A**	**LRD350**	37…50
–	–	–	–	**45**	76	44	100	**GS●J**	22 x 58	80	**3 x LC1D50A**	**LRD350**	37…50
45	81	47	100	–	–	–	–	**GS●J**	22 x 58	100	**3 x LC1D50A**	**LRD350**	37…50
–	–	–	–	**55**	90	52	100	**GS●K**	22 x 58	100	**3 x LC1D50A**	**LRD365**	48…65
55	100	58	100	–	–	–	–	**GS●K**	22 x 58	125	**3 x LC1D65A**	**LRD365**	48…65
75	135	78	100	**75**	125	72	100	**GS●L**	T0	160	**LC3D80**	**LRD3363**	63…80
–	–	–	–	**90**	146	84	100	**GS●L**	T0	160	**LC3D115**	**LRD4365**	80…104
90	165	95	100	–	–	–	–	**GS●N**	T1	200	**LC3D115**	**LRD4367**	95…120
110	200	115	100	**110**	178	103	100	**GS●N**	T1	200	**LC3D115**	**LRD4367**	95…120
132 (2)	240	139	100	**132** (2)	215	124	100	**GS●QQ**	T2	250	**LC3D150**	**LRD4369**	110…140

(1) IrD: current in the motor windings in delta connection.
(2) Please refer to Type 2 coordination tables for higher ratings.

Life Is On Schneider Electric

AC-3 category

Coordination: Star-Delta with NFC or DIN fuses + Contactors + Overload relay

1.5 to 355 kW at 400/415 and 440 V: type 2 coordination

Maximum operating rate: LC1D: 30 starts/hour; LC1F: 12 starts/hour.
Maximum starting time: LC1D: 30 seconds; LC1F: 20 seconds.

Standard power ratings of 3-phase motors 50/60 Hz in category AC-3						Switch-disconnector-fuse	aM fuses		Star-Delta contactors	Thermal overload relay	
400/415 V			440 V			Reference	Size	Rating	Reference	Reference	Setting range
P	Ie	Iq	P	Ie	Iq						
kW	A	kA	kW	A	kA			A			A
1.5	3.5	50	**1.5**	3.06	50	**GS1DD**	10 x 38	4	3 x **LC1D09**	**LRD08**	2.5…4
2.2	5	50	**2.2**	4.42	50	**GS1DD**	10 x 38	6	3 x **LC1D09**	**LRD10**	4…6
3	6.5	50	**3**	5.77	50	**GS1DD**	10 x 38	8	3 x **LC1D09**	**LRD12**	5.5…8
4	8.4	50	**4**	7.9	50	**GS1DD**	10 x 38	10	3 x **LC1D09**	**LRD14**	7…10
5.5	11	50	**5.5**	10.4	50	**GS1DD**	10 x 38	16	3 x **LC1D12**	**LRD16**	9…13
7.5	14.8	50	**7.5**	13.7	50	**GS1DD**	10 x 38	16	3 x **LC1D18**	**LRD21**	12…18
9 **11**	18.1 21	100 100	**9** **11**	16.9 20.1	100 100	**GS●F**	14 x 51	25	3 x **LC1D25**	**LRD22**	 16…24
15	28.5	100	**15**	26.5	100	**GS●F**	14 x 51	32	3 x **LC1D32**	**LRD32**	23…32
18.5	35	100	**18.5**	32.8	100	**GS●F**	14 x 51	40	3 x **LC1D40A**	**LRD340**	30…40
22	42	100	**22**	39	100	**GS●J**	22 x 58	50	3 x **LC1D50A**	**LRD350**	37…50
30	57	100	**30**	51.5	100	**GS●J**	22 x 58	80	3 x **LC1D65A**	**LRD365**	48…65
37	69	100	**37**	64	100	**GS●J**	22 x 58	80	3 x **LC1D80**	**LRD3363**	63…80
–	–	–	**45**	76	100	**GS●J**	22 x 58	80	3 x **LC1D80**	**LRD3365**	80…104
45	81	100	–	–	–	**GS●J**	22 x 58	100	3 x **LC1D115**	**LR9D5367**	60…100
–	–	–	**55**	90	100	**GS●L**	T0	125	3 x **LC1D115**	**LR9D5369**	90…150
55	100	100	–	–	–	**GS●L**	T0	125	3 x **LC1D150**	**LR9D5369**	90…150
–	–	–	**75**	125	100	**GS●L**	T0	160	3 x **LC1D150**	**LR9D5369**	90…150
355	605	100	–	–	–	**GS2V**	T4	800	3 x **LC1F780**	**LR9F7381**	380…630

AC-3 category

Coordination: Star-Delta with Fuses (DIN type aM) + Contactors + Overload relay

Contactor: **Maximum operating rate**: 30 starts/hour - **Maximum starting time**: 30 seconds.
The coordination table is for normal starting conditions (Class 10e/ 20e). For other heavy starting applications with long start times, please contact your technical support.
RE17RMMWS timer to be used for Star-Delta starter application.

90 to 335 kW at 400/415 V: type 2 coordination

Standard power ratings of 3-phase motors 50/60 Hz in category AC-3			Switch-disconnector	aM fuses		Contactor Line (KM2) / Delta (KM3) (1)	Contactor Star (KM1) (1)	Thermal overload relay	
400/415 V			Product type	Size	Rating	Product type		Product type	Ir setting (2)
P	Ie	Iq (max)							
kW	A	kA			A				A
90	160	80	GS●N	1	200	LC1G115	LC1D65	LR9G115	92
110	195	80	GS●N	1	250	LC1G150	LC1D80	LR9G225	113
132	230	80	GS●QQ	2	315	LC1G185	LC1G115	LR9G225	133
160	280	80	GS●QQ	2	400	LC1G225	LC1G115	LR9G225	162
200	350	80	GS2●S	3	500	LC1G265	LC1G115	LR9G225	202
220	380	80	GS2●S	3	500	LC1G330	LC1G150	LR9G500	219
250	430	80	GS2●S	3	500	LC1G400	LC1G150	LR9G500	248
315	540	80	GS2●S	3	630	LC1G500	LC1G225	LR9G500	312
335	575	80	GS2●V	4	800	LC1G500	LC1G225	LR9G500	332

110 to 400 kW at 440 V: type 2 coordination

Standard power ratings of 3-phase motors 50/60 Hz in category AC-3			Switch-disconnector	aM fuses		Contactor Line (KM2) / Delta (KM3) (1)	Contactor Star (KM1) (1)	Thermal overload relay	
440 V			Product type	Size	Rating	Product type		Product type	Ir setting (2)
P	Ie	Iq max							
kW	A	kA			A				A
110	177	80	GS●N	1	200	LC1G115	LC1D65	LR9G115	102
132	209	80	GS●N	1	250	LC1G150	LC1D80	LR9G225	121
160	255	80	GS●QQ	2	315	LC1G150	LC1G115	LR9G225	147
200	318	80	GS●QQ	2	400	LC1G185	LC1G115	LR9G225	184
220	343	80	GS2●S	3	500	LC1G225	LC1G115	LR9G225	198
250	390	80	GS2●S	3	500	LC1G265	LC1G150	LR9G500	225
315	490	80	GS2●S	3	500	LC1G330	LC1G185	LR9G500	283
355	554	80	GS2●S	3	630	LC1G330	LC1G225	LR9G500	320
400	627	80	GS2●V	4	800	LC1G400	LC1G225	LR9G500	362

90 to 315 kW at 500 V: type 2 coordination

Standard power ratings of 3-phase motors 50/60 Hz in category AC-3			Switch-disconnector	aM fuses		Contactor Line (KM2) / Delta (KM3) (1)	Contactor Star (KM1) (1)	Thermal overload relay	
500 V			Product type	Size	Rating	Product type		Product type	Ir setting (2)
P	Ie	Iq max							
kW	A	kA			A				A
90	128	80	GS●N	1	200	LC1G115	LC1D65	LR9G115	74
110	156	80	GS●N	1	250	LC1G115	LC1D65	LR9G115	90
132	184	80	GS●QQ	2	315	LC1G115	LC1D65	LR9G225	106
160	224	80	GS●QQ	2	400	LC1G150	LC1D80	LR9G225	129
200	280	80	GS2●S	3	500	LC1G185	LC1G115	LR9G225	162
220	308	80	GS2●S	3	500	LC1G185	LC1G115	LR9G500	178
250	344	80	GS2●S	3	500	LC1G225	LC1G150	LR9G500	199
315	432	80	GS2●S	3	630	LC1G265	LC1G185	LR9G630	249

(1) Refer to diagram page A5/41.
(2) This setting is a general guidance, Ir should be adjusted according to motor characteristics and conditions of use.

Life Is On Schneider Electric

AC-3 category

Coordination: Star-Delta with BS fuses + Contactors + Overload relay

1.5 to 80 kW at 415 and 440 V: type 2 coordination

Maximum operating rate: LC1D: 30 starts/hour.
Maximum starting time: LC1D: 30 seconds.

Standard power ratings of 3-phase motors 50/60 Hz in category AC-3						Switch-disconnector-fuse	BS fuses		Star-Delta contactors	Thermal overload relay	
415 V			440 V			Reference	Size	Rating	Reference	Reference	Setting range
P	Ie	Iq	P	Ie	Iq						
kW	A	kA	kW	A	kA			A			A
1.5	3.5	50	**1.5**	3.06	50	**GS1DDB**	A1	NIT 16	3 x **LC1D09**	**LRD08**	2.5…4
2.2	5	50	**2.2**	4.42	50	**GS1DDB**	A1	NIT 16	3 x **LC1D09**	**LRD10**	4…6
3	6.5	50	**3**	5.77	50	**GS1DDB**	A1	NIT 20	3 x **LC1D09**	**LRD12**	5.5…8
4	8.4	50	**4**	7.9	50	**GS1DDB**	A1	NIT 20	3 x **LC1D09**	**LRD14**	7…10
5.5	11	50	**5.5**	10.4	50	**GS1DDB**	A1	NIT 20M25	3 x **LC1D12**	**LRD16**	9…13
7.5	14.8	50	**7.5**	13.7	50	**GS1DDB**	A1	NIT 20M32	3 x **LC1D18**	**LRD21**	12…18
9	18.1	50	**9**	16.9	50	**GS2GB**	A2	TIA 32M35	3 x **LC1D18**	**LRD21**	12…18
11	21	50	**11**	20.1	50	**GS2GB**	A2	TIA 32M50	3 x **LC1D25**	**LRD22**	16…24
15	28.5	50	**15**	26.5	50	**GS2GB**	A2	TIA 32M63	3 x **LC1D32**	**LRD32**	23…32
22	42	50	**22**	39	50	**GS2GB**	A3	TIS 63M80	3 x **LC1D50A**	**LRD350**	37…50
–	–	–	**30**	51.5	50	**GS2GB**	A3	TIS 63M100	3 x **LC1D65A**	**LRD365**	48…65
30	57	50	**–**	–	–	**GS2GB**	A3	TIS 63M100	3 x **LC1D65A**	**LRD365**	48…65
45	81	50	**45**	76	50	**GS2LLB**	A4	TCP 100M125	3 x **LC1D80**	**LRD3363**	63…80
55	100	80	**55**	90	80	**GS2LLB**	A4	TCP 100M160	3 x **LC1D115**	**LR9D5369**	90…150
80	138	80	**80**	132	80	**GS2LB**	B2	TF 200M250	3 x **LC1D150**	**LR9D5369**	90…150

AC-3 category

Coordination: Star-Delta with Thermal magnetic circuit breaker + Contactors

1.5 to 132 kW at 400/415 V and 440 V: type 1 coordination

Maximum operating rate: LC3K: 12 starts/hour; LC3D: 30 starts/hour.
Maximum starting time: 30 seconds.

Standard power ratings of 3-phase motors 50-60 Hz in category AC-3								Circuit breaker		Star-delta contactors
400/415 V				440 V				Reference *References in italics are available in CEE zone only*	Setting range of thermal trips	Reference
P	Ie	IrD (1)	Iq (2)	P	Ie	IrD (1)	Iq (2)			
kW	A	A	kA	kW	A	A	kA		A	
1.5	3.6	2	50	**1.5**	3.06	1.8	50	**GV2ME08** *GV2ME08AP*	2.5…4	**LC3K06**
2.2 –	4.9 –	2.9 –	50 –	**2.2** **3**	4.42 5.77	2.6 3.3	50 50	**GV2ME10** *GV2ME10AP*	4…6.3	**LC3K06**
3 **4**	6.5 8.5	3.8 4.9	50 50	– **4**	– 7.9	– 4.6	– 15	**GV2ME14** *GV2ME14AP*	6…10	**LC3K06**
5.5	11.5	6.4	15	**5.5**	10.4	6	8	**GV2ME16** *GV2ME16AP*	9…14	**LC3K06**
7.5	15.5	8.6	15	**7.5**	13.7	7.9	8	**GV2ME20** *GV2ME20AP*	13…18	**LC3K09**
–	–	–	–	**9**	16.9	9.8	8	**GV2ME20** *GV2ME20AP*	13…18	**LC3D12A**
9	18.1	10	15	**11**	20.1	12	6	**GV2ME21** *GV2ME21AP*	17…23	**LC3D12A**
11	22	12	15	–	–	–	–	**GV2ME22** *GV2ME22AP*	20…25	**LC3D12A**
15	29	17	10	**15**	26.5	15	6	**GV2ME32** *GV2ME32AP*	24…32	**LC3D18A**
18.5	35	20	50	**18.5**	32.8	19	50	**GV3P40**	30…40	**LC3D18A**
–	–	–	–	**22**	39	23	50	**GV3P50**	37…50	**LC3D32A**
22	41	24	50	**30**	51.5	30	50	**GV3P50**	37…50	**LC3D32A**
30	55	33	50	**30**	51.5	30	50	**GV3P65**	48…65	**LC3D32A**
37	66	40	50	**37**	64	37	50	**GV3P65**	48…65	3 x **LC1D40A** (3)
37	66	40	100	**37**	64	37	70	**GV4P80**	40…80	3 x **LC1D40A** (3)
–	–	–	–	**45**	76	44	70	**GV4P80**	40…80	2 x **LC1D50A** **+1 x LC1D40A** (3)
45	80	47	100	–	–	–	–	**GV4P115**	65…115	2 x **LC1D50A** **+1 x LC1D40A** (3)
55	97	58	100	**55**	90	52	70	**GV4P115**	65…115	2 x **LC1D65A** **+1 x LC1D40A** (3)
75	132	78	35	**75**	125	72	35	**GV5P150F**	70…150	**LC3D80**
–	–	–	–	**90**	146	84	35	**GV5P150F**	0…150	**LC3D115**
90 **110**	160 195	95 115	35 35	**110**	178	103	35	**GV5P220F**	100…220	**LC3D115**
–	–	–	–	**132** (4)	215	124	35	**GV5P220F**	100…220	**LC3D150**
132 (4)	230	135	36	–	–	–	–	**GV6P320F**	160...320	**LC3D150**

(1) IrD: current in the motor windings in delta connection.
*(2) The breaking performance of circuit breakers **GV2ME** can be increased by adding a current limiter **GV1L3**, see page B6/21.*
*(3) For mounting 3 contactors **LC1D●●A**, Star-Delta starter kit **LAD9SD3** must be ordered separately, see page B8/46.*
(4) Please refer to Type 2 coordination tables for higher ratings.

Life Is On Schneider Electric

AC-3 category

Coordination: Star-Delta with Thermal magnetic circuit breaker + Contactors

1.5 to 90 kW at 400/415 V and 440 V: type 2 coordination

Maximum operating rate: LC1D: 30 starts/hour.
Maximum starting time: LC1D: 30 seconds.

Standard power ratings of 3-phase motors 50-60 Hz in category AC-3								Circuit breaker		Star-delta contactors
400/415 V				440 V				Reference	Setting range of thermal trips	Reference
P	Ie	IrD (7)	Iq	P	Ie	IrD (7)	Iq (1)			
kW	A	A	kA	kW	A	A	kA		A	
1.5	3.6	–	130	**1.5**	3.06	–	130	**GV2P08**	2.5…4	3 x **LC1D09** (2)
2.2	4.9	–	130	**2.2**	4.42	–	130	**GV2P10**	4…6.3	3 x **LC1D18** (3)
–	–	–	–	**3**	5.77	–	130	**GV2P10**	4...6.3	3 x **LC1D18** (3)
3	6.5	–	130	–	–	–	–	**GV2P14**	6…10	3 x **LC1D18** (3)
4	8.5	–	130	**4**	7.9	–	130	**GV2P14**	6…10	3 x **LC1D18** (3)
5.5	11.5	–	130	**5.5**	10.4	–	50	**GV2P16**	9…14	3 x **LC1D25** (3)
–	–	–	–	**7.5**	13.7	–	50	**GV2P16**	9…14	3 x **LC1D25** (3)
7.5	15.5	–	50	**9**	16.9	–	20	**GV2P20**	13…18	3 x **LC1D25** (3)
9	18.1	–	50	**11**	20.1	–	20	**GV2P21**	17…23	3 x **LC1D25** (3)
11	22	–	50	–	–	–	–	**GV2P22**	20…25	3 x **LC1D25** (3)
15	29	–	50	**15**	26.5	–	50	**GV3P32**	23…32	3 x **LC1D40A** (4)
18.5	35	–	50	–	–	–	–	**GV3P40**	30…40	2 x **LC1D50A** **+1 x LC1D40A** (3)
–	–	–	–	**18.5**	32.8	–	50	**GV3P40**	30…40	2 x **LC1D65A** **+1 x LC1D40A** (4)
22	41	–	50	–	–	–	–	**GV3P50**	37…50	2 x **LC1D50A** **+1 x LC1D40A** (3)
–	–	–	–	**22**	39	–	50	**GV3P50**	37…50	2 x **LC1D65A** **+1 x LC1D40A** (4)
30	55	–	50	**30**	51.5	–	50	**GV3P65**	48…65	2 x **LC1D65A** **+1 x LC1D40A** (4)
37	66	–	100	**45**	76	–	70	**GV4P80**	40…80	3 x **LC1D80** (5)
–	–	–	–	**37**	64	–	70	**GV4P80**	40…80	3 x **LC1D65A** (4)
45	80	–	100	–	–	–	–	**GV4P115**	65…115	3 x **LC1D115** (6)
55	97	–	100	**55**	90	–	70	**GV4P115**	65…115	3 x **LC1D115** (6)
75	132	78	70	**75**	125	74	65	**GV5P150H**	70…150	3 x **LC1D150** (6)
–	–	–	–	**90**	146	86	65	**GV5P150H**	70…150	3 x **LC1D150** (6)

*(1) The breaking performance of circuit breakers **GV2P** can be increased by adding a current limiter **GV1L3**, see page B6/21.*
*(2) For mounting 3 contactors **LC1D09**, Star-Delta starter kit **LAD91217** must be ordered separately, see page B8/46.*
*(3) For mounting 3 contactors **LC1D18** or **LC1D25**, Star-Delta starter kit **LAD93217** must be ordered separately, see page B8/46.*
*(4) For mounting 3 contactors **LC1D●●A**, Star-Delta starter kit **LAD9SD3** must be ordered separately, see page B8/46.*
*(5) For mounting 3 contactors **LC1D80**, Star-Delta starter kit **LA9D8017** must be ordered separately, see page B8/46.*
*(6) For mounting 3 contactors **LC1D115** or **LC1D150**, see page A2/13.*
(7) IrD: current in the motor windings in delta connection.

AC-3 category

Coordination: Star-Delta with Thermal magnetic circuit breaker + Contactors

Contactor: **Maximum operating rate**: 30 starts/hour - **Maximum starting time**: 30 seconds.
The coordination table is for normal starting conditions (Class 10e/ 20e). For other heavy starting applications with long start times, please contact your technical support.
RE17RMMWS timer to be used for Star-Delta starter application.

90 to 250 kW at 400/415 V: type 2 coordination (with TeSys GV5 / GV6 circuit breakers)

Standard power ratings of 3-phase motors 50/60 Hz in category AC-3			Circuit breaker			Contactor Line (KM2) / Delta (KM3) (3)	Contactor Star (KM1) (3)
400/415 V			Product type (1)	Ir setting (2)	Irm (2)	Product type	
P	Ie	Iq (max)					
kW	A	kA		A	A		
90	160	70	**GV5P220●**	170	1360	**LC1G115**	**LC1D65**
110	195	70	**GV5P220●**	200	1600	**LC1G150**	**LC1D80**
110	195	70	**GV6P320●**	200	1600	**LC1G150**	**LC1D80**
132	230	70	**GV6P320●**	240	1920	**LC1G150**	**LC1D95**
160	280	70	**GV6P320●**	300	2400	**LC1G185**	**LC1G115**
200	350	70	**GV6P500●**	380	3040	**LC1G225**	**LC1G115**
220	380	70	**GV6P500●**	400	3200	**LC1G265**	**LC1G150**
250	430	70	**GV6P500●**	440	3520	**LC1G265**	**LC1G150**

(1) Product type to be completed by replacing the ● with the breaking performance code:

Rated conditional short-circuit (kA)	GV5P220● GV6P320●/GV6P500●	
Breaking performance code	**F**	**H**
400/415 V	36	70

90 to 450 kW at 400/415 V: type 2 coordination (with ComPact NSX / NS circuit breakers)

Standard power ratings of 3-phase motors 50/60 Hz in category AC-3			Circuit breaker			Contactor Line (KM2) / Delta (KM3) (3)	Contactor Star (KM1) (3)
400/415 V			Product type (1)	Ir setting (2)	Irm (2)	Product type	
P	Ie	Iq (max)					
kW	A	kA		A	A		
90	160	130	**NSX250● + MicroLogic 2.2 M**	170	1360	**LC1G115**	**LC1D65**
110	195	130	**NSX250● + MicroLogic 2.2 M**	200	1600	**LC1G150**	**LC1D80**
110	195	130	**NSX400● + MicroLogic 2.3 M**	200	1600	**LC1G150**	**LC1D80**
132	230	130	**NSX400● + MicroLogic 2.3 M**	240	1920	**LC1G150**	**LC1D95**
160	280	130	**NSX400● + MicroLogic 2.3 M**	300	2400	**LC1G185**	**LC1G115**
200	350	130	**NSX630● + MicroLogic 2.3 M**	380	3040	**LC1G225**	**LC1G115**
220	380	130	**NSX630● + MicroLogic 2.3 M**	400	3200	**LC1G265**	**LC1G150**
250	430	130	**NSX630● + MicroLogic 2.3 M**	440	3520	**LC1G265**	**LC1G150**
300	500	130	**NS800● + MicroLogic 5.0**	480	4480	**LC1G330**	**LC1G185**
335	575	130	**NS800● + MicroLogic 5.0**	640	5120	**LC1G400**	**LC1G225**
355	610	130	**NS800● + MicroLogic 5.0**	640	5120	**LC1G400**	**LC1G225**
400	690	130	**NS800● + MicroLogic 5.0**	720	5760	**LC1G500**	**LC1G265**
450	770	130	**NS1000● + MicroLogic 5.0**	784	6272	**LC1G500**	**LC1G330**

(1) Product type to be completed by replacing the ● with the breaking performance code:

Rated conditional short-circuit (kA)	NSX250●/ NSX400●/ NSX630●					NS800●/ NS1000●
Breaking performance code	**F**	**N**	**H**	**S**	**L**	**L**
400/415 V	36	50	70	100	150	150

(2) This setting is a general guidance, Ir and Irm should be adjusted according to motor characteristics and conditions of use.
(3) Refer to diagram page A5/41.

Life Is On Schneider Electric

AC-3 category

Coordination: Star-Delta with Thermal magnetic circuit breaker + Contactors

Contactor: **Maximum operating rate**: 30 starts/hour - **Maximum starting time**: 30 seconds.
The coordination table is for normal starting conditions (Class 10e/ 20e). For other heavy starting applications with long start times, please contact your technical support.
RE17RMMWS timer to be used for Star-Delta starter application.

110 to 300 kW at 440 V: type 2 coordination (with TeSys GV5/GV6 circuit breakers)

Standard power ratings of 3-phase motors 50/60 Hz in category AC-3			Circuit breaker			Contactor Line (KM2) / Delta (KM3) [3]	Contactor Star (KM1) [3]
440 V			Product type [1]	Ir setting [2]	Irm [2]	Product type	
P	Ie	Iq (max)					
kW	A	kA		A	A		
110	177	65	**GV5P220●**	185	1480	**LC1G115**	**LC1D65**
132	209	65	**GV5P220●**	210	1680	**LC1G150**	**LC1D80**
160	255	65	**GV6P320●**	260	2080	**LC1G185**	**LC1G115**
200	318	65	**GV6P320●**	320	2560	**LC1G225**	**LC1G115**
220	343	65	**GV6P500●**	350	2800	**LC1G225**	**LC1G150**
250	390	65	**GV6P500●**	400	3200	**LC1G265**	**LC1G150**
300	466	65	**GV6P500●**	470	3760	**LC1G330**	**LC1G185**

(1) Product type to be completed by replacing the ● with the breaking performance code:

Rated conditional short-circuit (kA)	GV5P220●		GV6P320●/GV6P500●	
Breaking performance code	**F**	**H**	**F**	**H**
440 V	35	65	30	65

Coordination and standards

110 to 450 kW at 440 V: type 2 coordination (with ComPacT NSX/NS circuit breakers)

Standard power ratings of 3-phase motors 50/60 Hz in category AC-3			Circuit breaker			Contactor Line (KM2) / Delta (KM3) [3]	Contactor Star (KM1) [3]
440 V			Product type [1]	Ir setting [2]	Irm [2]	Product type	
P	Ie	Iq (max)					
kW	A	kA		A	A		
110	177	130	**NSX250● + MicroLogic 2.2 M**	185	1480	**LC1G115**	**LC1D65**
132	209	130	**NSX250● + MicroLogic 2.2 M**	210	1680	**LC1G150**	**LC1D80**
160	255	130	**NSX400● + MicroLogic 2.3 M**	260	2080	**LC1G185**	**LC1G115**
200	318	130	**NSX400● + MicroLogic 2.3 M**	320	2560	**LC1G225**	**LC1G115**
220	343	130	**NSX630● + MicroLogic 2.3 M**	350	2800	**LC1G225**	**LC1G150**
250	390	130	**NSX630● + MicroLogic 2.3 M**	400	3200	**LC1G265**	**LC1G150**
300	466	130	**NSX630● + MicroLogic 2.3 M**	470	3760	**LC1G330**	**LC1G185**
335	521	130	**NS800● + MicroLogic 5.0**	560	4480	**LC1G330**	**LC1G185**
355	554	130	**NS800● + MicroLogic 5.0**	560	4480	**LC1G400**	**LC1G225**
400	627	130	**NS800● + MicroLogic 5.0**	640	5120	**LC1G400**	**LC1G225**
450	695	130	**NS800● + MicroLogic 5.0**	720	5760	**LC1G500**	**LC1G265**

(1) Product type to be completed by replacing the ● with the breaking performance code:

Rated conditional short-circuit (kA)	NSX250●					NSX400●/ NSX630●					NS800●
Breaking performance code	**F**	**N**	**H**	**S**	**L**	**F**	**N**	**H**	**S**	**L**	**L**
440 V	35	50	65	100	130	30	42	65	100	130	130

(2) This setting is a general guidance, Ir and Irm should be adjusted according to motor characteristics and conditions of use.
(3) Refer to diagram page A5/41.

AC-3 category

Coordination: Star-Delta with Thermal magnetic circuit breaker + Contactors

Contactor: **Maximum operating rate**: 30 starts/hour - **Maximum starting time**: 30 seconds.
The coordination table is for normal starting conditions (Class 10e/ 20e). For other heavy starting applications with long start times, please contact your technical support.
RE17RMMWS timer to be used for Star-Delta starter application.

132 to 295 kW at 500 V: type 2 coordination (with TeSys GV5 / GV6 circuit breakers)

Standard power ratings of 3-phase motors 50/60 Hz in category AC-3			Circuit breaker			Contactor Line (KM2) / Delta (KM3) (3)	Contactor Star (KM1) (3)
500 V			Product type (1)	Ir setting (2)	Irm (2)	Product type	
P	Ie	Iq (max)					
kW	A	kA		A	A		
132	184	50	**GV5P220●**	185	1480	**LC1G115**	**LC1D65**
160	224	50	**GV6P320●**	240	1920	**LC1G150**	**LC1D80**
200	280	50	**GV6P320●**	300	2400	**LC1G185**	**LC1G115**
250	344	50	**GV6P500●**	350	2800	**LC1G225**	**LC1G115**
295	405	50	**GV6P500●**	440	3520	**LC1G265**	**LC1G150**

(1) Product type to be completed by replacing the ● with the breaking performance code:

Rated conditional short-circuit (kA)	GV5P220●		GV6P320●/ 500●	
Breaking performance code	**F**	**H**	**F**	**H**
500 V	30	50	25	50

Coordination and standards

132 to 425 kW at 500 V: type 2 coordination (with ComPact NSX / NS circuit breakers)

Standard power ratings of 3-phase motors 50/60 Hz in category AC-3			Circuit breaker			Contactor Line (KM2) / Delta (KM3) (3)	Contactor Star (KM1) (3)
500 V			Product type (1)	Ir setting (2)	Irm (2)	Product type	
P	Ie	Iq (max)					
kW	A	kA		A	A		
132	184	70	**NSX250● + MicroLogic 2.2 M** (4)	185	1480	**LC1G115**	**LC1D65**
160	224	70	**NSX400● + MicroLogic 2.3 M** (4)	240	1920	**LC1G150**	**LC1D80**
200	280	70	**NSX400● + MicroLogic 2.3 M** (4)	300	2400	**LC1G185**	**LC1G115**
250	344	70	**NSX630● + MicroLogic 2.3 M** (4)	350	2800	**LC1G225**	**LC1G115**
295	405	70	**NSX630● + MicroLogic 2.3 M** (4)	440	3520	**LC1G265**	**LC1G150**
375	516	70	**NS800● + MicroLogic 5.0**	560	4480	**LC1G330**	**LC1G185**
425	584	70	**NS800● + MicroLogic 5.0**	640	5120	**LC1G400**	**LC1G225**

(1) Product type to be completed by replacing the ● with the breaking performance code:

Rated conditional short-circuit (kA)	NSX250●					NSX400●/ NSX630●					NS800●
Breaking performance code	**F**	**N**	**H**	**S**	**L**	**F**	**N**	**H**	**S**	**L**	**L**
500 V	30	36	50	65	70	25	30	50	65	70	100

(2) This setting is a general guidance, Ir and Irm should be adjusted according to motor characteristics and conditions of use.
(3) Refer to diagram page A5/41.
(4) Applicable also with MicroLogic 6.2 M and 6.3 M trip units.

Life Is On Schneider Electric

AC-3 category

Coordination: Star-Delta with Magnetic circuit breaker + Contactors + Thermal overload relay

1.5 to 160 kW at 400/415 and 440 V: type 1 coordination

Maximum operating rate: LC3K: 12 starts/hour; LC3D: 30 starts/hour.
Maximum starting time: LC3K and LC3D: 30 seconds.

Standard power ratings of 3-phase motors 50/60 Hz in category AC-3								Circuit breaker			Star-Delta contactors	Thermal overload relay	
400/415 V				440 V				Reference	Rating	Irm (2)	Reference	Reference	Setting range
P	Ie	IrD (1)	Iq	P	Ie	IrD (1)	Iq						
kW	A	A	kA	kW	A	A	kA		A	A			A
–	–	–	–	**1.5**	3.06	1.8	50	**GV2LE08**	4	51	**LC3K06**	**LR2K0308**	1.8…2.6
1.5	3.6	2	50	**2.2**	4.42	3	50						
2.2	4.9	3	50	**3**	5.77	3	50	**GV2LE10**	6.3	78	**LC3K06**	**LR2K0310**	2.6…3.7
3	6.5	4	50	–	–	–	–	**GV2LE14**	10	138	**LC3K06**	**LR2K0312**	3.7…5.5
–	–	–	–	**4**	7.9	5	50	**GV2LE10**	6.3	78	**LC3K06**	**LR2K0312**	3.7…5.5
4	8.5	5	50	–	–	–	–	**GV2LE14**	10	138	**LC3K06**	**LR2K0312**	3.7…5.5
–	–	–	–	**5.5**	10.4	6	15	**GV2LE14**	10	138	**LC3K06**	**LR2K0314**	5.5…8
5.5	11.5	6	15	–	–	–	–	**GV2LE16**	14	170	**LC3K06**	**LR2K0314**	5.5…8
–	–	–	–	**7.5**	13.7	8	8	**GV2LE16**	14	170	**LC3K09**	**LR2K0316**	8…11.5
7.5	15.5	9	15	–	–	–	–	**GV2LE20**	18	223	**LC3K09**	**LR2K0316**	8…11.5
–	–	–	–	**9**	16.9	1	8	**GV2LE16**	14	170	**LC3D12A**	**LRD16**	9…13
9	18.1	10	15	–	–	–	–	**GV2LE22**	25	327	**LC3K12**	**LR2K0316**	8…11.5
–	–	–	–	**11**	20.1	12	8	**GV2LE20**	18	223	**LC3K12**	**LR2K0321**	10…14
11	22	12	15	–	–	–	–	**GV2LE22**	25	327	**LC3K12**	**LR2K0321**	10…14
–	–	–	–	**15**	26.5	15	6	**GV2LE22**	25	327	**LC3D18A**	**LRD21**	12…18
15	29	16	10	–	–	–	–	**GV2LE32**	32	384	**LC3D18A**	**LRD21**	12…18
18.5	35	20	50	**18.5**	32.8	19	50	**GV3L40**	40	560	**LC3D18A**	**LRD22**	16…24
22	41	24	50	**22**	39	23	50	**GV3L50**	50	700	**LC3D32A**	**LRD32**	23…32
–	–	–	–	**30**	51.5	30	50	**GV3L65**	65	910	**LC3D32A**	**LRD32**	23…32
30	55	33	50	–	–	–	–	**GV3L65**	65	910	**LC3D32A**	**LRD35**	30…38
–	–	–	–	**37**	64	37	50	**GV3L65**	65	910	3 x **LC1D40A** (4)	**LRD340**	30…40
37	66	40	100	–	–	–	–	**GV4L80**	80	640	3 x **LC1D40A** (4)	**LRD350**	37…50
–	–	–	–	**37**	64	37	70	**GV4L80**	80	640	3 x **LC1D40A** (4)	**LRD340**	30…40
–	–	–	–	**45**	76	44	70	**GV4L80**	80	800	2 x **LC1D50A** +1 x **LC1D40A** (4)	**LRD350**	37…50
45	80	47	100	–	–	–	–	**GV4L115**	115	805	2 x **LC1D50A** +1 x **LC1D40A** (4)	**LRD350**	37…50
55	97	58	100	**55**	90	52	70	**GV4L115**	115	805	2 x **LC1D50A** +1 x **LC1D40A** (4)	**LRD365**	48…65
–	–	–	–	**75**	125	72	(3)	**NSX160●MA** (3)	150	1200	**LC3D80**	**LRD3363**	63…80
75	132	78	(3)	–	–	–	–	**NSX160●MA** (3)	150	1200	**LC3D80**	**LRD3363**	63…80
–	–	–	–	**90**	146	85	(3)	**NSX160●MA** (3)	150	1200	**LC3D115**	**LRD4365**	80…104
90	160	96	(3)	**110**	178	103	(3)	**NSX250●MA** (3)	220	1760	**LC3D115**	**LRD4365**	80…104
–	–	–	–	**132**	215	125	(3)	**NSX250●MA** (3)	220	1760	**LC3D150**	**LRD4369**	110…140
110 (5)	195	116	(3)	–	–	–	–	**NSX250●MA** (3)	220	1760	**LC3D115**	**LRD4367**	95…120
–	–	–	–	**160** (5)	256	148	(3)	**NSX400● + Micrologic 1.3M** (3)	320	2240	**LC3D150**	**LR9D5369**	90…150

(1) IrD: current in the motor windings in delta connection.
(2) Irm: setting current of the magnetic trip.
(3) Reference to be completed by replacing the ● with the breaking performance code:

Breaking performance Iq (kA)	NSX100●MA		NSX160●MA, NSX250●MA		NSX400●, NSX630●		NS800●	
400/415 V	36	70	36	70	70	150	70	150
440 V	35	65	35	65	65	130	65	130
Code	**F**	**H**	**F**	**H**	**H**	**L**	**H**	**L**

*(4) For mounting 3 contactors **LC1D●●A**, Star-Delta starter kit **LAD9SD3** must be ordered separately, see page B8/46.*
(5) Please refer to Type 2 coordination tables for higher ratings.

AC-3 category

Coordination: Star-Delta with Magnetic circuit breaker + Contactors + Thermal overload relay

1.5 to 90 kW at 400/415 and 440 V: type 2 coordination

Maximum operating rate: LC3D: 30 starts/hour.
Maximum starting time: LC3D: 30 seconds.

Standard power ratings of 3-phase motors 50/60 Hz in category AC-3						Circuit breaker			Star-Delta contactors	Thermal overload relay	
400/415 V			440 V			Reference	Rating	Irm [1]	Reference	Reference	Setting range
P	Ie	Iq	P	Ie	Iq						
kW	A	kA	kW	A	kA		A	A			A
1.5	3.6	130	**1.5**	3.06	130	**GV2L08**	4	51	3 x **LC1D09**	**LRD08**	2.5…4
2.2 **3**	4.9 6.5	130 130	**2.2** **3**	4.42 5.77	130 130	**GV2L10**	6.3	78	3 x **LC1D09**	**LRD10**	4…6
–	–	–	**4**	7.9	20	**GV2L14**	10	138	3 x **LC1D18**	**LRD14**	7…10
4	8.5	130	–	–	–	**GV2L14**	10	138	3 x **LC1D18**	**LRD16**	9…13
5.5	11.5	50	**5.5**	10.4	20	**GV2L16**	14	170	3 x **LC1D25**	**LRD16**	9…13
7.5	15.5	50	**7.5**	13.7	20	**GV2L20**	18	223	3 x **LC1D25**	**LRD21**	12…18
–	–	–	**9**	16.9	20	**GV2L22**	25	327	3 x **LC1D25**	**LRD21**	12…18
9 **11**	18.1 22	50 50	– **11**	– 20.1	– 20	**GV2L22**	25	327	3 x **LC1D25**	**LRD22**	16…24
15	29	50	**15**	26.5	50	**GV3L32**	32	448	3 x **LC1D40A** [2]	**LRD332**	23…32
18.5	35	50	–	–	–	**GV3L40**	40	560	2 x **LC1D50A** +1 x **LC1D40A** [2]	**LRD340**	30…40
–	–	–	**18.5**	32.8	50	**GV3L40**	40	560	2 x **LC1D65A** +1 x **LC1D40A** [2]	**LRD340**	30…40
22	41	50	–	–	–	**GV3L50**	50	700	2 x **LC1D50A** +1 x **LC1D40A** [2]	**LRD350**	37…50
–	–	–	**22**	39	50	**GV3L50**	50	700	2 x **LC1D65A** +1 x **LC1D40A** [2]	**LRD350**	37…50
30	55	50	**30**	51.5	50	**GV3L65**	65	910	2 x **LC1D65A** +1 x **LC1D40A** [2]	**LRD365**	48…65
–	–	–	**37**	64	50	**GV3L65**	65	910	3 x **LC1D80**	**LRD3359**	48…65
37	66	100	–	–	–	**GV4L80**	80	640	3 x **LC1D80**	**LRD3363**	63…80
–	–	–	**45**	76	70	**GV4L80**	80	800	3 x **LC1D80**	**LRD3363**	63…80
45	80	100	–	–	–	**GV4L115**	115	805	3 x **LC1D115**	**LR9D5367**	60…100
–	–	–	**55**	90	70	**GV4L115**	115	920	3 x **LC1D115**	**LR9D5367**	60…100
55	97	100	–	–	–	**GV4L115**	115	920	3 x **LC1D115**	**LR9D5369**	90…150
55	97	[3]	–	–	–	**NSX160●MA** [3]	150	1200	3 x **LC1D115**	**LR9D5369**	90…150
–	–	–	**75**	125	[3]	**NSX160●MA** [3]	150	1200	3 x **LC1D150**	**LR9D5369**	90…150
75	132	[3]	**90**	146	[3]	**NSX160●MA** [3]	150	1200	3 x **LC1D150**	**LR9D5369**	90…150

(1) Irm: setting current of the magnetic trip.
*(2) For mounting 3 contactors **LC1D●●A**, Star-Delta starter kit **LAD9SD3** must be ordered separately, see page B8/46.*
(3) Reference to be completed by replacing the ● with the breaking performance code:

Breaking performance Iq (kA)	NSX100●MA		NSX160●MA, NSX250●MA		NSX400●, NSX630●	
400/415 V	36	70	36	70	70	150
440 V	35	65	35	65	65	130
Code	**F**	**H**	**F**	**H**	**H**	**L**

Life Is On Schneider Electric

AC-3 category

Coordination: Star-Delta with Magnetic circuit breaker + Contactors + Overload relay

Contactor: **Maximum operating rate**: 30 starts/hour - **Maximum starting time**: 30 seconds.
The coordination table is for normal starting conditions (Class 10e/ 20e). For other heavy starting applications with long start times, please contact your technical support.
RE17RMMWS timer to be used for Star-Delta starter application.

90 to 450 kW at 400/415 V: type 2 coordination (with ComPacT NSX/NS circuit breakers and LR9G overload relays)

Standard power ratings of 3-phase motors 50/60 Hz in category AC-3			Circuit breaker		Contactor Line (KM2) / Delta (KM3) (3)	Contactor Star (KM1) (3)	Thermal overload relay	
400/415 V			Product type (1)	Irm (2)	Product type		Product type	Ir setting (2)
P	Ie	Iq (max)						
kW	A	kA		A				A
90	160	130	NSX250• + MA	1980	LC1G115	LC1D65	LR9G115	92
110	195	130	NSX250• + MA	1980	LC1G150	LC1D80	LR9G225	113
110	195	130	NSX400• + MicroLogic 1.3 M	1920	LC1G150	LC1D80	LR9G225	113
132	230	130	NSX400• + MicroLogic 1.3 M	1920	LC1G150	LC1D80	LR9G225	133
160	280	130	NSX400• + MicroLogic 1.3 M	2560	LC1G185	LC1G115	LR9G225	162
200	350	130	NSX630• + MicroLogic 1.3 M	3000	LC1G225	LC1G150	LR9G225	202
220	380	130	NSX630• + MicroLogic 1.3 M	3500	LC1G265	LC1G150	LR9G500	219
250	430	130	NSX630• + MicroLogic 1.3 M	3500	LC1G265	LC1G150	LR9G500	248
300	500	130	NS800• + MicroLogic 5.0 LR OFF	4800	LC1G330	LC1G185	LR9G500	266
335	575	130	NS800• + MicroLogic 5.0 LR OFF	4800	LC1G400	LC1G225	LR9G500	332
355	610	130	NS800• + MicroLogic 5.0 LR OFF	5600	LC1G400	LC1G225	LR9G500	352
400	690	130	NS800• + MicroLogic 5.0 LR OFF	5600	LC1G500	LC1G265	LR9G500	362
450	695	130	NS800• + MicroLogic 5.0 LR OFF	6400	LC1G500	LC1G265	LR9G500	401

(1) Product type to be completed by replacing the • with the breaking performance code:

Rated conditional short-circuit (kA)	NSX250•/ NSX400•/ NSX630•					NS800•
Breaking performance code	F	N	H	S	L	L
400/415 V	36	50	70	100	130	150

110 to 355 kW at 440 V: type 2 coordination (with ComPacT NSX/NS circuit breakers and LR9G overload relays)

Standard power ratings of 3-phase motors 50/60 Hz in category AC-3			Circuit breaker		Contactor Line (KM2) / Delta (KM3) (3)	Contactor Star (KM1) (3)	Thermal overload relay	
440 V			Product type (1)	Irm (2)	Product type		Product type	Ir setting (2)
P	Ie	Iq (max)						
kW	A	kA		A				A
110	177	130	NSX250• + MA	1980	LC1G115	LC1D65	LR9G115	102
132	209	130	NSX250• + MA	1980	LC1G150	LC1D80	LR9G225	121
160	255	130	NSX400• + MicroLogic 1.3 M	2240	LC1G185	LC1D95	LR9G225	147
200	318	130	NSX400• + MicroLogic 1.3 M	2560	LC1G225	LC1G115	LR9G225	184
220	343	130	NSX630• + MicroLogic 1.3 M	3000	LC1G225	LC1G150	LR9G225	198
250	390	130	NSX630• + MicroLogic 1.3 M	3500	LC1G265	LC1G150	LR9G500	225
300	466	130	NSX630• + MicroLogic 1.3 M	4000	LC1G330	LC1G185	LR9G500	269
335	521	130	NS800• + MicroLogic 5.0 LR OFF	4800	LC1G330	LC1G185	LR9G500	301
355	554	130	NS800• + MicroLogic 5.0 LR OFF	4800	LC1G400	LC1G225	LR9G500	320

(1) Product type to be completed by replacing the • with the breaking performance code:

Rated conditional short-circuit (kA)	NSX250•					NSX400•/ NSX630•				NS800•
Breaking performance code	F	N	H	S	L	F	N	S	L	L
440 V	35	50	65	100	130	30	42	100	130	130

(2) This setting is a general guidance, Ir and Irm should be adjusted according to motor characteristics and conditions of use.
(3) Refer to diagram page A5/41.

AC-3 category

Coordination: Star-Delta with Magnetic circuit breaker + Contactors + Overload relay

Contactor: **Maximum operating rate**: 30 starts/hour - **Maximum starting time**: 30 seconds.
The coordination table is for normal starting conditions (Class 10e/ 20e). For other heavy starting applications with long start times, please contact your technical support.
RE17RMMWS timer to be used for Star-Delta starter application.

132 to 425 kW at 500 V: type 2 coordination (with ComPacT NSX / NS circuit breakers and LR9G overload relays)

Standard power ratings of 3-phase motors 50/60 Hz in category AC-3			Circuit breaker		Contactor Line (KM2) / Delta (KM3) (3)	Contactor Star (KM1) (3)	Thermal overload relay	
500 V			Product type (1)	Irm (2)	Product type		Product type	Ir setting (2)
P	Ie	Iq (max)						
kW	A	kA		A				A
132	184	70	**NSX400● + MicroLogic 1.3 M**	1600	**LC1G115**	**LC1D65**	**LR9G225**	106
160	224	70	**NSX400● + MicroLogic 1.3 M**	1920	**LC1G150**	**LC1D80**	**LR9G225**	129
200	280	70	**NSX400● + MicroLogic 1.3 M**	2560	**LC1G185**	**LC1G115**	**LR9G225**	162
250	344	70	**NSX630● + MicroLogic 1.3 M**	3000	**LC1G225**	**LC1G150**	**LR9G225**	199
295	405	70	**NSX630● + MicroLogic 1.3 M**	3500	**LC1G265**	**LC1G150**	**LR9G500**	234
375	516	70	**NS800● + MicroLogic 5.0**	4800	**LC1G330**	**LC1G185**	**LR9G500**	298
425	584	70	**NS800● + MicroLogic 5.0**	4800	**LC1G400**	**LC1G185**	**LR9G500**	337

(1) Product type to be completed by replacing the ● with the breaking performance code:

Rated conditional short-circuit (kA)	NSX400●/ NSX630●					NS800●
Breaking performance code	**F**	**N**	**H**	**S**	**L**	**L**
500 V	25	30	50	65	70	100

(2) This setting is a general guidance, Ir and Irm should be adjusted according to motor characteristics and conditions of use.
(3) Refer to diagram page A5/41.

Life Is On Schneider Electric

690 V - Type 1 or 2 coordination with fuses			
Applications with 3-phase motors 50-60 Hz in category AC-3	aM fuses	Standard Starters SIL Starters Power Interface Modules	
690 V	Rating	References	Setting range
Iq			
kA	A		A
80	≤10	**TPRST009** **TPRSS009** **TPRPM009**	0.18-9
	≤25	**TPRST025** **TPRSS025** **-**	0.5-25
	≤40	**TPRST038** **TPRSS038** **TPRPM038**	0.76-38
	≤80	**TPRST065** **TPRSS065** **-**	3.25-65
	≤80	**TPRST080** **TPRSS080** **TPRPM080**	4-80

0.06 to 22 kW at 230 V: Type 1 coordination

Applications power ratings of 3-phase motors 50-60 Hz in category AC-3			Circuit breaker (Trip class 5 to 15)	Standard Starters SIL Starters Power Interface Modules	
230 V			References	References	Setting range
P	Ie	Iq			
kW	A	kA			A
0.06	0.35	100	**GV2L03**	**TPRST009 TPRSS009 TPRPM009**	0.18-9
0.09	0.52	100	**GV2L04**	**TPRST009 TPRSS009 TPRPM009**	0.18-9
0.12	0.7	100	**GV2L05**	**TPRST009 TPRSS009 TPRPM009**	0.18-9
0.18	1	100	**GV2L06**	**TPRST009 TPRSS009 TPRPM009**	0.18-9
0.25	1.5	100	**GV2L06**	**TPRST009 TPRSS009 TPRPM009**	0.18-9
0.37	1.9	100	**GV2L07**	**TPRST009 TPRSS009 TPRPM009**	0.18-9
0.55	2.6	100	**GV2L08**	**TPRST009 TPRSS009 TPRPM009**	0.18-9
0.75	3.3	100	**GV2L08**	**TPRST009 TPRSS009 TPRPM009**	0.18-9
1.1	4.7	100	**GV2L10**	**TPRST009 TPRSS009 TPRPM009**	0.18-9
1.5	6.3	100	**GV2L14**	**TPRST009 TPRSS009 TPRPM009**	0.18-9
2.2	8.5	100	**GV2L14**	**TPRST009 TPRSS009 TPRPM009**	0.18-9
3	11.3	100	**GV2L16**	**TPRST025 TPRSS025 TPRPM038**	0.5-25 / 0.76-38
4	15	100	**GV2L20**	**TPRST025 TPRSS025 TPRPM038**	0.5-25 / 0.76-38
5.5	20	50	**GV2L22**	**TPRST025 TPRSS025 TPRPM038**	0.5-25 / 0.76-38
7.5	27	50	**GV2L32**	**TPRST038 TPRSS038 TPRPM038**	0.76-38
9	32	100	**GV3L40**	**TPRST038 TPRSS038 TPRPM038**	0.76-38
11	38	100	**GV3L40**	**TPRST065 TPRSS065 TPRPM080**	3.25-65 / 4-80
15	51	100	**GV3L65**	**TPRST065 TPRSS065 TPRPM080**	3.25-65 / 4-80
18.5	61	100	**GV3L65**	**TPRST065 TPRSS065 TPRPM080**	3.25-65 / 4-80
22	72	100	**GV3L73**	**TPRPM080**	4-80

AC-3 category

IEC - Type 2 coordination with circuit breakers - 230 V

0.06 to 22 kW at 230 V: Type 2 coordination

Applications power ratings of 3-phase motors 50-60 Hz in category AC-3			Circuit breaker (Trip class 5 to 15)	Standard Starters SIL Starters	
230 V			References	References	Setting range
P	Ie	Iq			
kW	A	kA			A
0.06	0.35	100	**GV2L03**	**TPRST009** **TPRSS009**	0.18-9
0.09	0.52	100	**GV2L04**	**TPRST009** **TPRSS009**	0.18-9
0.12	0.7	100	**GV2L05**	**TPRST009** **TPRSS009**	0.18-9
0.18	1	100	**GV2L06**	**TPRST009** **TPRSS009**	0.18-9
0.25	1.5	100	**GV2L06**	**TPRST009** **TPRSS009**	0.18-9
0.37	1.9	100	**GV2L07**	**TPRST009** **TPRSS009**	0.18-9
0.55	2.6	100	**GV2L08**	**TPRST009** **TPRSS009**	0.18-9
0.75	3.3	100	**GV2L08**	**TPRST025** **TPRSS025**	0.5-25
1.1	4.7	100	**GV2L10**	**TPRST025** **TPRSS025**	0.5-25
1.5	6.3	100	**GV2L14**	**TPRST025** **TPRSS025**	0.5-25
2.2	8.5	100	**GV2L14**	**TPRST025** **TPRSS025**	0.5-25
3	11.3	100	**GV2L16**	**TPRST025** **TPRSS025**	0.5-25
4	15	100	**GV2L20**	**TPRST025** **TPRSS025**	0.5-25
5.5	20	50	**GV2L22**	**TPRST025** **TPRSS025**	0.5-25
7.5	27	50	**GV2L32**	**TPRST038** **TPRSS038**	0.76-38
9	32	100	**GV3L40**	**TPRST038** **TPRSS038**	0.76-38
11	38	100	**GV3L40**	**TPRST065** **TPRSS065**	3.25-65
15	51	100	**GV3L65**	**TPRST065** **TPRSS065**	3.25-65
18.5	61	100	**GV3L65**	**TPRST065** **TPRSS065**	3.25-65

AC-3 category

IEC - Type 1 coordination with circuit breakers - 400/415 - 440 - 500 V

0.06 to 37 kW at 400/415 - 440 - 500 V: Type 1 coordination

Applications power ratings of 3-phase motors 50-60 Hz in category AC-3									Circuit breaker (Trip class 5 to 15)	Standard Starters SIL Starters Power Interface Modules	
400/415 V			440 V			500 V			References	References	Setting range
P	Ie	Iq	P	Ie	Iq	P	Ie	Iq			
kW	A	kA	kW	A	kA	kW	A	kA			A
0.06	0.2	100	0.06	0.18	100	-	-	-	GV2L03	TPRST009 TPRSS009 TPRPM009	0.18-9
0.09	0.3	100	0.09	0.27	100	-	-	-			
0.12	0.44	100	0.12	0.4	100	-	-	-	GV2L04	TPRST009 TPRSS009 TPRPM009	0.18-9
0.18	0.6	100	0.18	0.55	100	-	-	-			
0.25	0.85	100	0.25	0.77	100	-	-	-	GV2L05	TPRST009 TPRSS009 TPRPM009	0.18-9
0.37	1.1	100	-	-	-	0.37	0.88	100			
-	-	-	0.37	1	100	-	-	-	GV2L06	TPRST009 TPRSS009 TPRPM009	0.18-9
0.55	1.5	100	0.55	1.4	100	0.55	1.2	100			
-	-	-	-	-	-	0.75	1.5	100	GV2L07	TPRST009 TPRSS009 TPRPM009	0.18-9
0.75	1.9	100	0.75	1.7	100	-	-	-			
1.1	2.7	100	-	-	-	1.1	2.2	100			
-	-	-	1.1	2.4	100	-	-	-	GV2L08	TPRST009 TPRSS009 TPRPM009	0.18-9
1.5	3.6	100	1.5	3.3	100	1.5	2.9	100			
2.2	4.9	100	2.2	4.5	100	2.2	3.9	100	GV2L10	TPRST009 TPRSS009 TPRPM009	0.18-9
-	-	-	3	5.9	100	3	5.2	100			
3	6.5	100	-	-	-	-	-	-	GV2L14	TPRST009 TPRSS009 TPRPM009	0.18-9
4	8.5	100	4	7.7	20	4	6.8	10			
-	-	-	-	-	-	5.5	9.2	10			
5.5	11.5	50	5.5	10.5	20	-	-	-	GV2L16	TPRST025 TPRSS025 TPRPM038	0.5-25 / 0.76-38
-	-	-	-	-	-	7.5	12.4	10			
7.5	15.5	50	7.5	14.1	20	-	-	-	GV2L20	TPRST025 TPRSS025 TPRPM038	0.5-25 / 0.76-38
-	-	-	9	16.5	20	9	13.9	10			
9	18.1	50	-	-	-	-	-	-	GV2L22	TPRST025 TPRSS025 TPRPM038	0.5-25 / 0.76-38
11	22	50	11	20	20	11	17.6	10			
-	-	-	-	-	-	15	23	10			
15	29	50	15	26.4	20	-	-	-	GV2L32	TPRST038 TPRSS038 TPRPM038	0.76-38
-	-	-	-	-	-	18.5	28	10			
18.5	35	50	18.5	31.8	50	-	-	-	GV3L40	TPRST065 TPRSS065 TPRPM080	3.25-65 / 4-80
-	-	-	-	-	-	22	33	12			
22	41	50	22	37.3	50	-	-	-	GV3L50	TPRST065 TPRSS065 TPRPM080	3.25-65 / 4-80
-	-	-	-	-	-	30	44	12			
30	55	50	30	50	50	-	-	-	GV3L65	TPRST065 TPRSS065 TPRPM080	3.25-65 / 4-80
-	-	-	37	60	50	37	53	12			
37	66	50	-	-	-	-	-	-	GV3L73	TPRST065 TPRSS065 TPRPM080	3.25-65 / 4-80

Life Is On Schneider Electric

AC-3 category

IEC - Type 2 coordination with circuit breakers - 400/415 - 440 - 500 V

0.06 to 37 kW at 400/415 - 440 - 500 V: Type 2 coordination

Applications power ratings of 3-phase motors 50-60 Hz in category AC-3									Circuit breaker (Trip class 5 to 15)	Standard Starters SIL Starters	
400/415 V			440 V			500 V			References	References	Setting range
P	Ie	Iq	P	Ie	Iq	P	Ie	Iq			
kW	A	kA	kW	A	kA	kW	A	kA			A
0.06	0.2	100	0.06	0.18	100	-	-	-	GV2L03	TPRST009 TPRSS009	0.18-9
0.09	0.3	100	0.09	0.27	100	-	-	-			
0.12	0.44	100	0.12	0.4	100	-	-	-	GV2L04	TPRST009 TPRSS009	0.18-9
0.18	0.6	100	0.18	0.55	100	-	-	-			
0.25	0.85	100	0.25	0.77	100	-	-	-	GV2L05	TPRST009 TPRSS009	0.18-9
0.37	1.1	100	-	-	-	0.37	0.88	100			
-	-	-	0.37	1	100	-	-	-	GV2L06	TPRST009 TPRSS009	0.18-9
0.55	1.5	100	0.55	1.4	100	0.55	1.2	100			
-	-	-	-	-	-	0.75	1.5	100	GV2L07	TPRST009 TPRSS009	0.18-9
0.75	1.9	100	0.75	1.7	100	-	-	-			
						1.1	2.2	100			
1.1	2.7	100	-	-	-	-	-	-	GV2L07	TPRST025 TPRSS025	0.5-25
-	-	-	1.1	2.4	100	-	-	-	GV2L08	TPRST009 TPRSS009	0.18-9
-	-	-	-	-	-	1.5	2.9	100			
1.5	3.6	100	1.5	3.3	100	-	-	-	GV2L08	TPRST025 TPRSS025	0.5-25
2.2	4.9	100	2.2	4.5	100	2.2	3.9	100	GV2L10	TPRST025 TPRSS025	0.5-25
-	-	-	3	5.9	100	3	5.2	100			
3	6.5	100	-	-	-	-	-	-	GV2L14	TPRST025 TPRSS025	0.5-25
4	8.5	100	4	7.7	20	4	6.8	10			
-	-	-	-	-	-	5.5	9.2	10			
5.5	11.5	50	5.5	10.5	20	-	-	-	GV2L16	TPRST025 TPRSS025	0.5-25
-	-	-	-	-	-	7.5	12.4	10			
7.5	15.5	50	7.5	14.1	20	-	-	-	GV2L20	TPRST025 TPRSS025	0.5-25
-	-	-	9	16.5	20	9	13.9	10			
9	18.1	50	-	-	-	-	-	-	GV2L22	TPRST025 TPRSS025	0.5-25
11	22	50	11	20	20	11	17.6	10			
-	-	-	-	-	-	15	23	10			
15	29	50	15	26.4	20	-	-	-	GV2L32	TPRST038 TPRSS038	0.76-38
-	-	-	-	-	-	18.5	28	10			
18.5	35	50	18.5	31.8	50	-	-	-	GV3L40	TPRST065 TPRSS065	3.25-65
-	-	-	-	-	-	22	33	12			
22	41	50	22	37.3	50	-	-	-	GV3L50	TPRST065 TPRSS065	3.25-65
-	-	-	-	-	-	30	44	12			
30	55	50	30	50	50	-	-	-	GV3L65	TPRST065 TPRSS065	3.25-65
-	-	-	37	60	50	37	53	12			
37	66	50	-	-	-	-	-	-	GV3L73	TPRST065 TPRSS065	3.25-65

0.06 to 37 kW at 690 V: Type 1 coordination

Applications power ratings of 3-phase motors 50-60 Hz in category AC-3			Circuit breaker (Trip class 5 to 15)	Standard Starters SIL Starters Power Interface Modules	
690 V			References	References	Setting range
P	Ie	Iq			
kW	A	kA			A
0.37	0.64	100	**GV2L05**	**TPRST009** **TPRSS009** **TPRPM009**	0.18-9
0.55	0.87	4	**GV2L05**	**TPRST009** **TPRSS009** **TPRPM009**	0.18-9
0.75	1.1	4	**GV2L06**	**TPRST009** **TPRSS009** **TPRPM009**	0.18-9
1.1	1.6	4	**GV2L07**	**TPRST009** **TPRSS009** **TPRPM009**	0.18-9
1.5	2.1	4	**GV2L07**	**TPRST009** **TPRSS009** **TPRPM009**	0.18-9
2.2	2.8	4	**GV2L08**	**TPRST009** **TPRSS009** **TPRPM009**	0.18-9
3	3.8	4	**GV2L08**	**TPRST009** **TPRSS009** **TPRPM009**	0.18-9
4	4.9	4	**GV2L10**	**TPRST009** **TPRSS009** **TPRPM009**	0.18-9
5.5	6.7	4	**GV2L14**	**TPRST009** **TPRSS009** **TPRPM009**	0.18-9
7.5	8.9	4	**GV2L14**	**TPRST025** **TPRSS025** **TPRPM038**	0.5-25 / 0.76-38
9	10.5	4	**GV2L16**	**TPRST025** **TPRSS025** **TPRPM038**	0.5-25 / 0.76-38
11	12.8	4	**GV2L16**	**TPRST025** **TPRSS025** **TPRPM038**	0.5-25 / 0.76-38
15	17	4	**GV2L20**	**TPRST025** **TPRSS025** **TPRPM038**	0.5-25 / 0.76-38
18.5	21	4	**GV2L22**	**TPRST038** **TPRSS038** **TPRPM038**	0.76-38
22	24	4	**GV2L22**	**TPRST065** **TPRSS065** **TPRPM080**	3.25-65 / 4-80
30	32	6	**GV3L40**	**TPRST065** **TPRSS065** **TPRPM080**	3.25-65 / 4-80
37	39	6	**GV3L50**	**TPRST065** **TPRSS065** **TPRPM080**	3.25-65 / 4-80

AC-3 category

IEC - Type 2 coordination with circuit breakers - 690 V

0.06 to 37 kW at 690 V: Type 2 coordination

Applications power ratings of 3-phase motors 50-60 Hz in category AC-3			Circuit breaker (Trip class 5 to 15)	Standard Starters SIL Starters	
690 V			References	References	Setting range
P	Ie	Iq			
kW	A	kA			A
0.37	0.64	100	**GV2L05**	**TPRST009** **TPRSS009**	0.18-9
0.55	0.87	4	**GV2L05**	**TPRST009** **TPRSS009**	0.18-9
0.75	1.1	4	**GV2L06**	**TPRST009** **TPRSS009**	0.18-9
1.1	1.6	4	**GV2L07**	**TPRST009** **TPRSS009**	0.18-9
1.1	1.6	50	**GV2L07 + LA9LB920**	**TPRST025** **TPRSS025**	0.5-25
1.5	2.1	4	**GV2L07**	**TPRST009** **TPRSS009**	0.18-9
1.5	2.1	50	**GV2L07 + LA9LB920**	**TPRST025** **TPRSS025**	0.5-25
2.2	2.8	4	**GV2L08**	**TPRST025** **TPRSS025**	0.5-25
2.2	2.8	50	**GV2L08 + LA9LB920**	**TPRST025** **TPRSS025**	0.5-25
3	3.8	4	**GV2L08**	**TPRST025** **TPRSS025**	0.5-25
3	3.8	50	**GV2L08 + LA9LB920**	**TPRST025** **TPRSS025**	0.5-25
4	4.9	4	**GV2L10**	**TPRST025** **TPRSS025**	0.5-25
4	4.9	50	**GV2L10 + LA9LB920**	**TPRST025** **TPRSS025**	0.5-25
5.5	6.7	4	**GV2L14**	**TPRST025** **TPRSS025**	0.5-25
5.5	6.7	50	**GV2L14 + LA9LB920**	**TPRST025** **TPRSS025**	0.5-25
7.5	8.9	4	**GV2L14**	**TPRST025** **TPRSS025**	0.5-25
7.5	8.9	50	**GV2L14 + LA9LB920**	**TPRST025** **TPRSS025**	0.5-25
9	10.5	4	**GV2L16**	**TPRST025** **TPRSS025**	0.5-25
11	12.8	4	**GV2L16**	**TPRST025** **TPRSS025**	0.5-25
11	12.8	3	**GV2L16 + LA9LB920**	**TPRST038** **TPRSS038**	0.76-38
15	17	4	**GV2L20**	**TPRST025** **TPRSS025**	0.5-25
15	17	3	**GV2L22 + LA9LB920**	**TPRST038** **TPRSS038**	0.76-38
18.5	21	4	**GV2L22**	**TPRST038** **TPRSS038**	0.76-38
18.5	21	3	**GV3L25 + LA9LB920**	**TPRST065** **TPRSS065**	3.25-65
22	24	4	**GV2L22**	**TPRST065** **TPRSS065**	3.25-65
22	24	3	**GV2L32 + LA9LB920**	**TPRST065** **TPRSS065**	3.25-65
30	32	6	**GV3L40**	**TPRST065** **TPRSS065**	3.25-65
37	39	6	**GV3L50**	**TPRST065** **TPRSS065**	3.25-65

UL - SCCR Ratings

Short Circuit Current Ratings (SCCR)

UL File E39281 and File E48539 Suitable for use on a circuit delivering not more than:								Standard Starters SIL Starters Power Interface Modules	
High SCCR						Standard SCCR			
Max Voltage 600 V Class J Fuse [1]		Max Voltage 480 V Circuit Breaker		Max Voltage 600 V Circuit Breaker		Max Voltage 600 V Circuit Breaker or Fuse		References	Setting range
SCCR	Maximum Amperage	SCCR	Maximum Amperage	SCCR	Maximum Amperage	SCCR	Maximum Amperage		
kA	A	kA	A	kA	A	kA	A		A
100	25	85	35	50	35	5	35	**TPRST009** **TPRSS009** **TPRPM009**	0.18-9
100	60	85	60	50	60	5	100	**TPRST025** **TPRSS025**	0.5-25
100	100	85	60	50	60	5	125	**TPRST038** **TPRSS038** **TPRPM038**	0.76-38
100	125	85	110	50	110	5	250	**TPRST065** **TPRSS065**	3.25-65
100	125	85	110	50	110	5	250	**TPRST080** **TPRSS080** **TPRPM080**	4-80

(1) When protected by any Class J or CC time-delay fuse (Class CC applicable up to 30 A only).

Group Motor Rating

Suitable for group installation on a circuit delivering not more than:				Standard Starters SIL Starters	
Max voltage 600 V - Class J Fuse [1]		Max voltage 480 V - Circuit Breaker		References	Setting range
SCCR	Maximum Amperage	SCCR	Maximum Amperage		
kA	A	kA	A		A
5	90	5	90	**TPRST009** **TPRSS009**	0.18-9
5	175	5	175	**TPRST025** **TPRSS025**	0.5-25
5	175	5	175	**TPRST038** **TPRSS038**	0.76-38
5	600	5	600	**TPRST065** **TPRSS065**	3.25-65
5	600	5	600	**TPRST080** **TPRSS080**	4-80

(1) When protected by any Class J or CC time-delay fuse.

Life Is On Schneider Electric

Contactor utilisation categories conforming to IEC 60947-1

The standard utilisation categories define the current values which the contactor must be able to make or break.

These values depend on:
- the type of load being switched: squirrel cage or slip ring motor, resistors,
- the conditions under which making or breaking takes place: motor stalled, starting or running, reversing, plugging.

a.c. applications	
Category AC-1	This category applies to all types of a.c. load with a power factor equal to or greater than 0.95 (cos φ ⩾ 0.95). Application examples: heating, distribution.
Category AC-2	This category applies to starting, plugging and inching of slip ring motors. ■ On closing, the contactor makes the starting current, which is about 2.5 times the rated current of the motor. ■ On opening, it must break the starting current, at a voltage less than or equal to the mains supply voltage.
Category AC-3	This category applies to squirrel cage motors with breaking during normal running of the motor. ■ On closing, the contactor makes the starting current, which is about 5 to 7.5 times the rated current of the motor, following history. ■ On opening, it breaks the rated current drawn by the motor. Application examples: all standard squirrel cage motors: lifts, escalators, conveyor belts, bucket elevators, compressors, pumps, mixers, air conditioning units, etc... .
Category AC-3e	This category applies to high-efficiency IE3/ IE4 squirrel cage motors with breaking during normal running of the motor. ■ On closing, the contactor makes the starting current, which is about 5 to 9 times the rated current of the motor. ■ On opening, it breaks the rated current drawn by the motor. Application examples: all high-efficiency IE3/IE4 with NE and HE squirrel cage motors typically used for elevators and escalators, machine tools, conveyor belts, compressors, pumps, mixers, air conditioning units, etc.
Category AC-4	This category covers applications with plugging and inching of squirrel cage and slip ring motors. The contactor closes at a current peak which may be as high as 5 or 7 times the rated motor current. On opening it breaks this same current at a voltage which is higher, the lower the motor speed. This voltage can be the same as the mains voltage. Breaking is severe. Application examples: printing machines, wire drawing machines, cranes and hoists, metallurgy industry.
d.c. applications	
Category DC-1	This category applies to all types of d.c. load with a time constant (L/R) of less than or equal to 1 ms.
Category DC-3	This category applies to starting, counter-current braking and inching of shunt motors. Time constant ⩽ 2 ms. ■ On closing, the contactor makes the starting current, which is about 2.5 times the rated motor current. ■ On opening, the contactor must be able to break 2.5 times the starting current at a voltage which is less than or equal to the mains voltage. The slower the motor speed, and therefore the lower its back e.m.f., the higher this voltage. Breaking is difficult.
Category DC-5	This category applies to starting, counter-current braking and inching of series wound motors. Time constant ⩽ 7.5 ms. On closing, the contactor makes a starting current peak which may be as high as 2.5 times the rated motor current. On opening, the contactor breaks this same current at a voltage which is higher, the lower the motor speed. This voltage can be the same as the mains voltage. Breaking is severe.

Utilisation categories for auxiliary contacts & control relays conforming to IEC 60947-1

a.c. applications	
Category AC-14 (1)	This category applies to the switching of electromagnetic loads whose power drawn with the electromagnet closed is less than 72 VA. Application example: switching the operating coil of contactors and relays.
Category AC-15 (1)	This category applies to the switching of electromagnetic loads whose power drawn with the electromagnet closed is more than 72 VA. Application example: switching the operating coil of contactors.
d.c. applications	
Category DC-13 (2)	This category applies to the switching of electromagnetic loads for which the time taken to reach 95 % of the steady state current (T = 0.95) is equal to 6 times the power P drawn by the load (with P ⩽ 50 W). Application example: switching the operating coil of contactors without economy resistor.

(1) Replaces category AC-11.
(2) Replaces category DC-11.

Definitions

Altitude

The rarefied atmosphere at high altitude reduces the dielectric strength of the air and hence the rated operational voltage of the contactor. It also reduces the cooling effect of the air and hence the rated operational current of the contactor (unless the temperature drops at the same time).

No derating is necessary up to 3000 m.

Derating factors to be applied above this altitude for main pole operational voltage and current (a.c. supply) are as follows.

Altitude	3500 m	4000 m	4500 m	5000 m
Rated operational voltage	0.90	0.80	0.70	0.60
Rated operational current	0.92	0.90	0.88	0.86

Ambient air temperature

The temperature of the air surrounding the device, measured near to the device.
The operating characteristics are given:
- with no restriction for temperatures between -5 and +55 °C,
- with restrictions, if necessary, for temperatures between -50 and +70 °C.

Rated operational current (Ie)

This is defined taking into account the rated operational voltage, operating rate and duty, utilisation category and ambient temperature around the device.

Rated conventional thermal current (Ith) (1)

The current which a closed contactor can sustain for a minimum of 8 hours without its temperature rise exceeding the limits given in the standards.

Permissible short time rating

The current which a closed contactor can sustain for a short time after a period of no load, without dangerous overheating.

Rated operational voltage (Ue)

This is the voltage value which, in conjunction with the rated operational current, determines the use of the contactor or starter, and on which the corresponding tests and the utilisation category are based. For 3-phase circuits it is expressed as the voltage between phases.
Apart from exceptional cases such as rotor short-circuiting, the rated operational voltage Ue is less than or equal to the rated insulation voltage Ui.

Rated control circuit voltage (Uc)

The rated value of the control circuit voltage, on which the operating characteristics are based. For a.c. applications, the values are given for a near sinusoidal wave form (less than 5 % total harmonic distortion).

Rated insulation voltage (Ui)

This is the voltage value used to define the insulation characteristics of a device and referred to in dielectric tests determining leakage paths and creepage distances. As the specifications are not identical for all standards, the rated value given for each of them is not necessarily the same.

Rated impulse withstand voltage (Uimp)

The peak value of a voltage surge which the device is able to withstand without breaking down.

Rated operational power (expressed in kW)

The rated power of the standard motor which can be switched by the contactor, at the stated operational voltage.

(1) Conventional thermal current, in free air, conforming to IEC standards.
Note: these definitions are extracted from standard IEC 60947-1.

Life Is On Schneider Electric

Definitions

Rated breaking capacity [1]	This is the current value which the contactor can break in accordance with the breaking conditions specified in the IEC standard.
Rated making capacity [1]	This is the current value which the contactor can make in accordance with the making conditions specified in the IEC standard.
On-load factor (m)	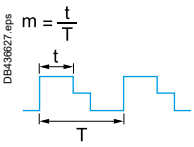 This is the ratio between the time the current flows (t) and the duration of the cycle (T). Cycle duration: duration of current flow + time at zero current.
Pole impedance	The impedance of one pole is the sum of the impedance of all the circuit components between the input terminal and the output terminal. The impedance comprises a resistive component (R) and an inductive component ($X = L\omega$). The total impedance therefore depends on the frequency and is normally given for 50 Hz. This average value is given for the pole at its rated operational current.
Electrical durability	This is the average number of on-load operating cycles which the main pole contacts can perform without maintenance. The electrical durability depends on the utilisation category, the rated operational current and the rated operational voltage.
Mechanical durability	This is the average number of no-load operating cycles (i.e. with zero current flow through the main poles) which the contactor can perform without mechanical failure.

(1) For a.c. applications, the breaking and making capacities are expressed by the rms value of the symmetrical component of the short-circuit current. Taking into account the maximum asymmetry which may exist in the circuit, the contacts therefore have to withstand a peak asymmetrical current which may be twice the rms symmetrical component.

***Note:** these definitions are extracted from standard IEC 60947-1.*

Operational current and power conforming to IEC (θ ≤ 60 °C) - AC-3

Contactor size			LC1/ LP1 K06	LC1/ LP1 K09	LC1 K12	LC1 K16	LC1 D09	LC1 D12	LC1 D18	LC1 D25	LC1 D32	LC1 D38	LC1 D40A
Maximum operational current in AC-3	≤ 440 V	**A**	6	9	12	16	9	12	18	25	32	38	40
Rated operational power P (standard motor power ratings)	220/240 V (1)	**kW**	1.5	2.2	3	3	2.2	3	4	5.5	7.5	9	11
	380/400 V (2)	**kW**	2.2	4	5.5	7.5	4	5.5	7.5	11	15	18.5	18.5
	415 V	**kW**	2.2	4	5.5	7.5	4	5.5	9	11	15	18.5	22
	440 V	**kW**	3	4	5.5	7.5	4	5.5	9	11	15	18.5	22
	500 V	**kW**	–	–	–	–	5.5	7.5	10	15	18.5	18.5	22
	660/690 V (3)	**kW**	3	4	4	4	5.5	7.5	10	15	18.5	18.5	30
	1000 V	**kW**	–	–	–	–	–	–	–	–	–	–	–

Operational current and power conforming to IEC (θ ≤ 60 °C) - AC-3e

Contactor size			LC1/ LP1 K06	LC1/ LP1 K09	LC1 K12	LC1 K16	LC1 D09	LC1 D12	LC1 D18	LC1 D25	LC1 D32	LC1 D38	LC1 D40A
Maximum operational current in AC-3e	≤ 440 V	**A**	6	9	12	16	9	12	18	25	32	38	40
Rated operational power P (standard motor power ratings)	220/240 V (1)	**kW**	1.5	2.2	3	3	2.2	3	4	5.5	7.5	9	11
	380/400 V (2)	**kW**	2.2	4	5.5	7.5	4	5.5	7.5	11	15	18.5	18.5
	415 V	**kW**	2.2	4	5.5	7.5	4	5.5	9	11	15	18.5	22
	440 V	**kW**	3	4	5.5	7.5	4	5.5	9	11	15	18.5	22
	500 V	**kW**	–	–	–	–	5.5	7.5	10	15	18.5	18.5	22
	660/690 V (3)	**kW**	3	4	4	4	5.5	7.5	10	15	18.5	18.5	30
	1000 V	**kW**	–	–	–	–	–	–	–	–	–	–	–

Maximum operating rate in operating cycles/hour (4)

On-load factor	Operational power					LC1 D09	LC1 D12	LC1 D18	LC1 D25	LC1 D32	LC1 D38	LC1 D40A
≤ 85 %	P	–	–	–	–	1200	1200	1200	1200	1000	1000	1000
	0.5 P	–	–	–	–	3000	3000	2500	2500	2500	2500	2500
≤ 25 %	P	–	–	–	–	1800	1800	1800	1800	1200	1200	1200

Operational current and power conforming to UL, CSA (θ ≤ 60 °C)

Contactor size			LC1/ LP1 K06	LC1/ LP1 K09	LC1/ LP1 K12	LC1 D09	LC1 D12	LC1 D18	LC1 D25	LC1 D32	LC1 D38	LC1 D40A
Maximum operational current in AC-3	≤ 440 V	**A**	6	9	12	9	12	18	25	32	–	40
Rated operational power P (standard motor power ratings 60 Hz)	200/208 V	**HP**	1.5	2	3	2	3	5	7.5	10	–	10
	230/240 V	**HP**	1.5	3	3	2	3	5	7.5	10	–	10
	460/480 V	**HP**	3	5	7.5	5	7.5	10	15	20	–	30
	575/600 V	**HP**	3	5	10	7.5	10	15	20	25	–	30

(1) 230 V for LC1G115 to LC1G800 contactors.
(2) 400 V for LC1G115 to LC1G800 contactors.
(3) 690 V for LC1K/LP1K and LC1G115 to LC1G800 contactors.
(4) Depending on the operational power and the on-load factor (θ ≤ 60 °C).

LC1 D50A	LC1 D65A	LC1 D80A	LC1 D80	LC1 D95	LC1 D115	LC1 D150	LC1 G115	LC1 G150	LC1 G185	LC1 G225	LC1 G265	LC1 G330	LC1 G400	LC1 G500	LC1 G630	LC1 G800	LC1 F780	LC1 F1000
50	65	66	80	95	115	150	115	150	185	225	265	330	400	500	630	800	780	1000
15	18.5	22	22	25	30	40	30	37	55	55	75	90	110	160	200	250	220	315
22	30	37	37	45	55	75	55	75	90	110	132	160	200	250	335	450	400	560
25	37	37	45	45	59	80	55	75	90	110	132	160	200	250	375	450	425	630
30	37	37	45	45	59	80	75	90	110	132	160	200	250	315	400	450	425	670
30	37	37	55	55	75	90	75	90	110	132	160	200	250	355	400	500	450	–
33	37	37	45	45	80	100	75	90	110	160	200	220	315	355	500	560	475	–
–	–	–	–	–	65	75	75	75	75	132	160	185	220	335	450	450	450	–

LC1 D50A	LC1 D65A	LC1 D80A	LC1 D80	LC1 D95	LC1 D115	LC1 D150	LC1 G115	LC1 G150	LC1 G185	LC1 G225	LC1 G265	LC1 G330	LC1 G400	LC1 G500	LC1 G630	LC1 G800
50	65	66	80	95	115	150	115	145	177	209	255	294	391	437	555	587
15	18.5	22	22	25	30	40	30	37	55	55	75	90	110	147	180	200
22	30	37	37	45	55	75	55	75	90	110	132	160	200	250	315	335
25	37	37	45	45	59	80	55	75	90	110	132	160	200	250	335	355
30	37	37	45	45	59	80	75	90	110	132	160	185	250	280	355	375
30	37	37	55	55	75	90	75	90	110	132	160	200	250	315	375	425
33	37	37	45	45	80	100	75	90	110	160	200	220	315	355	500	560
–	–	–	–	–	65	75	–	75	75	132	160	185	220	335	450	450

LC1 D50A	LC1 D65A	LC1 D80A	LC1 D80	LC1 D95	LC1 D115	LC1 D150	LC1 G115	LC1 G150	LC1 G185	LC1 G225	LC1 G265	LC1 G330	LC1 G400	LC1 G500	LC1 G630	LC1 G800	LC1 F780	LC1 F1000
1000	1000	1000	750	750	750	750	(5)	(5)	(5)	(5)	(5)	(5)	(5)	(5)	(5)	(5)	500	(5)
2500	2500	2500	2000	2000	2000	1200	(5)	(5)	(5)	(5)	(5)	(5)	(5)	(5)	(5)	(5)	1200	(5)
1200	1200	1200	1200	1200	1200	1200	(5)	(5)	(5)	(5)	(5)	(5)	(5)	(5)	(5)	(5)	600	(5)

LC1 D50A	LC1 D65A	LC1 D80A	LC1 D80	LC1 D95	LC1 D115	LC1 D150	LC1 G115	LC1 G150	LC1 G185	LC1 G225	LC1 G265	LC1 G330	LC1 G400	LC1 G500	LC1 G630	LC1 G800	LC1 F780	LC1 F1000
50	65	65	80	95	115	150	115	150	185	225	265	330	400	500	630	800	780	1000
15	20	20	30	30	30	40	30	40	50	60	75	100	125	150	250	300	–	350
15	20	20	30	30	40	50	40	50	60	75	100	125	150	200	300	350	450	400
40	40	40	60	60	75	100	75	100	125	150	200	250	300	400	600	700	900	900
40	50	50	60	60	100	125	100	125	150	150	200	300	400	450	700	800	900	–

(5) Other values: please contact your regional sales office.

Selection according to required electrical durability, in category AC-3, AC-3e (Ue ≤ 440 V)

Control of 3-phase asynchronous squirrel cage motors with breaking whilst running.
The current broken (Ic) in category AC-3 is equal to the rated operational current (Ie) of the motor.

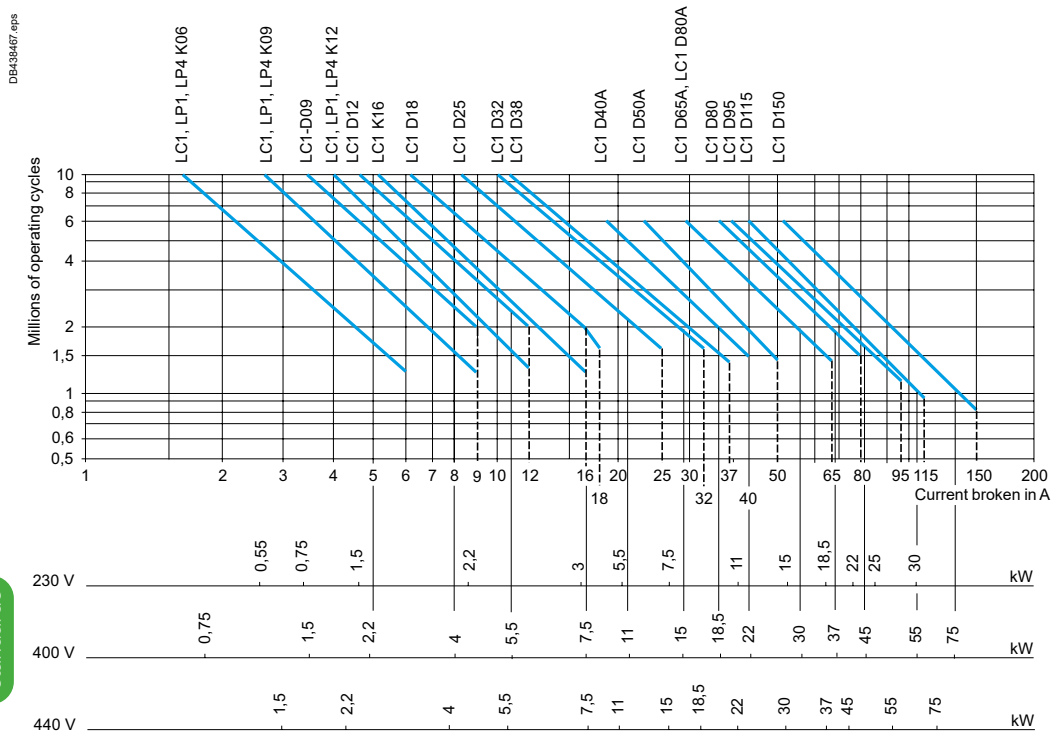

Operational power in kW-50 Hz.

Example:

Asynchronous motor with P = 5.5 kW - Ue = 400 V - Ie = 11 A - Ic = Ie = 11 A
or asynchronous motor with P = 5.5 kW - Ue = 415 V - Ie = 11 A - Ic = Ie = 11 A
3 million operating cycles required.
The above selection curves show the contactor rating needed: LC1D18.

Selection according to required electrical durability, in category AC-3, AC-3e (Ue = 660/690 V) (1)

Control of 3-phase asynchronous squirrel cage motors with breaking whilst running.
The current broken (Ic) in category AC-3 is equal to the rated operational current (Ie) of the motor.

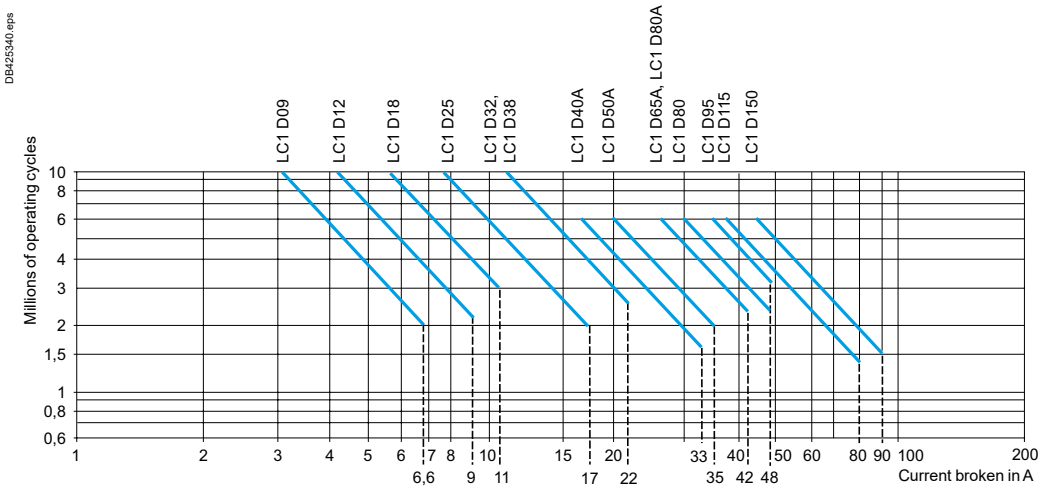

(1) For Ue = 1000 V, use the 660/690 V curves, but do not exceed the operational current at the operational power indicated for 1000 V.

Life Is On Schneider Electric

Selection according to required electrical durability, in category AC-3 (Ue ≤ 440 V)

Control of 3-phase asynchronous squirrel cage motors with breaking whilst running. The current broken (Ic) in category AC-3 is equal to the rated operational current (Ie) of the motor.

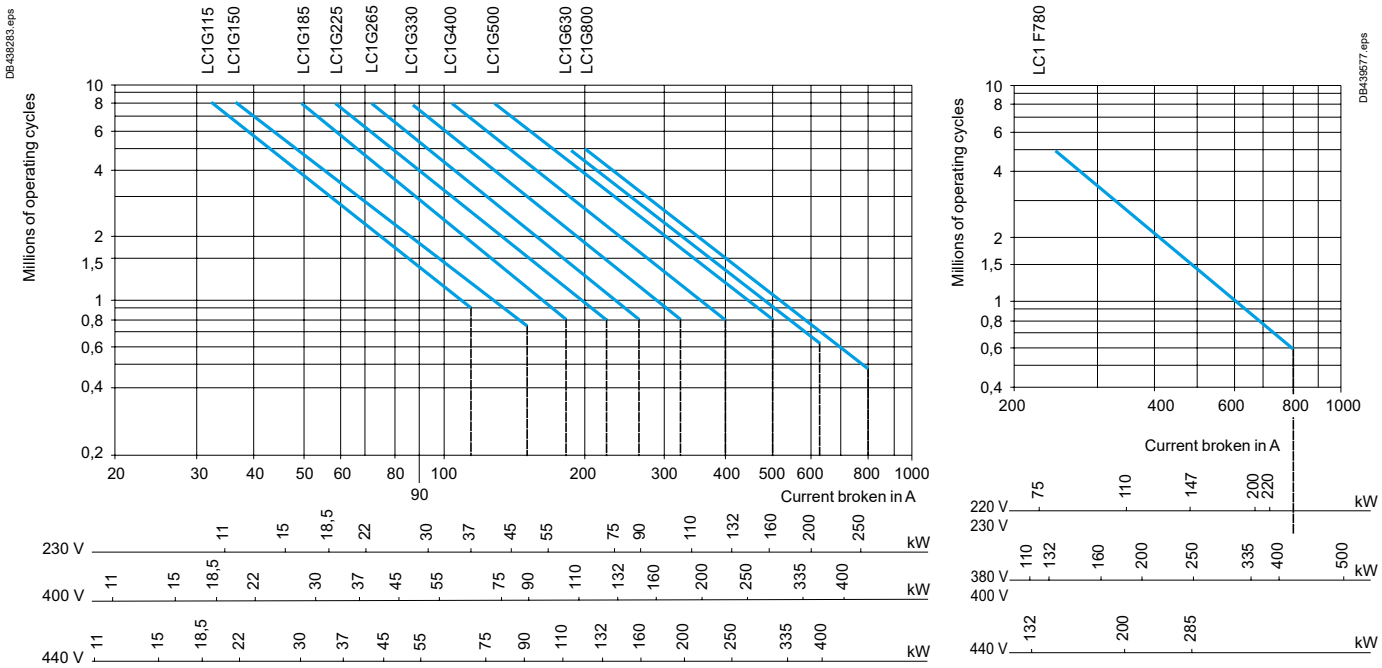

Operational power in kW-50 Hz.

Example:

Asynchronous motor with P = 132 kW - Ue = 400 V - Ie = 230 A - Ic = Ie = 230 A
1.8 million operating cycles required.
The above selection curves show the contactor rating needed: LC1G400.

Selection according to required electrical durability, in category AC-3 (Ue = 660/690 V)

Control of 3-phase asynchronous squirrel cage motors with breaking whilst running.
The current broken (Ic) in category AC-3 is equal to the rated operational current (Ie) of the motor.

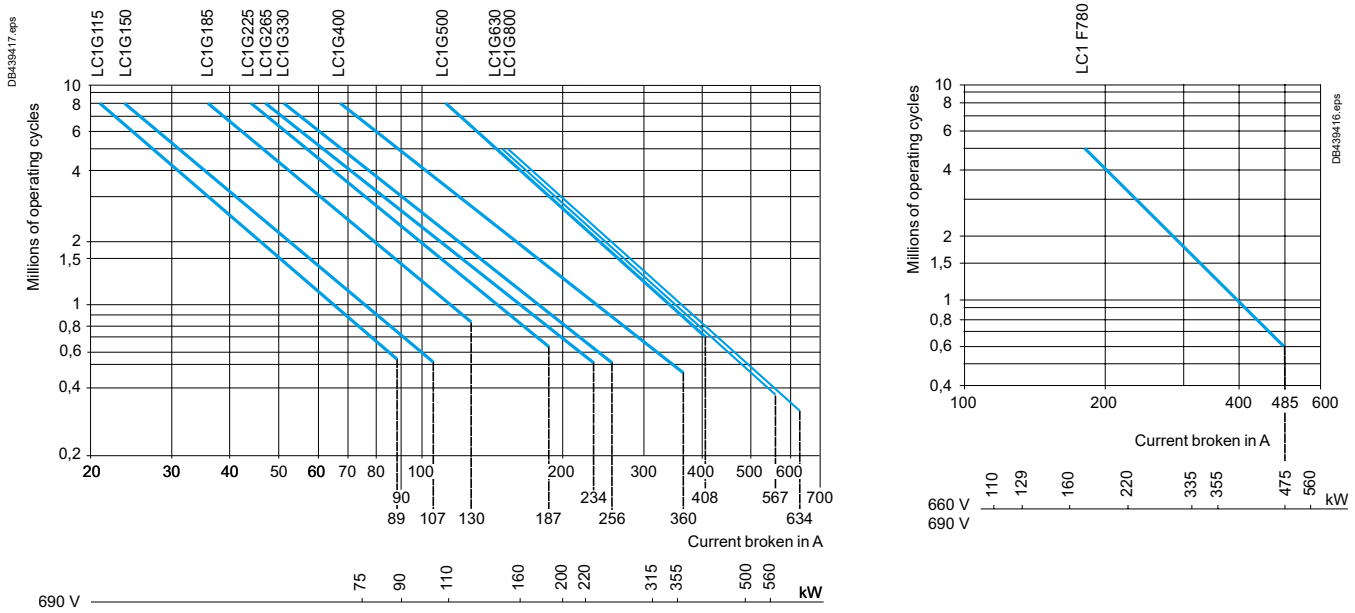

Example:

Asynchronous motor with P = 200 kW - Ue = 690 V - Ie = 203 A - Ic = Ie = 203 A
1 million operating cycles required.
The above selection curves show the contactor rating needed: LC1G400.

Maximum operational current (open-mounted device)

Contactor size			LC1/ LP1 K09	LC1/ LP1 K12	LC1 D09	LC1 DT20	LC1 D12 DT25	LC1 D18 DT32	LC1 D25 DT40	LC1 D32	LC1 D38	LC1 D40A DT60A	LC1 D50A	LC1 D65A D80A DT80A	LC1/ LP1 D80
Maximum operating rate in operating cycles/hour			600	600	600	600	600	600	600	600	600	600	600	600	600
Connection conforming to IEC 60947-1	Cable c.s.a.	mm²	4	4	4	4	4	6	6	10	10	35	35	35	50
	Bar c.s.a.	mm	–	–	–	–	–	–	–	–	–	–	–	–	–
Operational current in AC-1 in A, according to the ambient temperature conforming to IEC 60947-1	≤ 40 °C	A	20	20	25	20	25	32	40	50	50	60	80	80	125
	≤ 60 °C	A (4)	20	20	25	20	25	32	40	50	50	60	80	80	125
	≤ 70 °C	A (4)	(1)	(1)	17	(1)	17	22	28	35	35	42	56	56	80
Maximum operational power ≤ 60 °C	220/230 V	kW	8	8	9	8	9	11	14	18	18	21	29	29	45
	240 V	kW	8	8	9	8	9	12	15	19	19	23	31	31	49
	380/400 V	kW	14	14	15	14	15	20	25	31	31	37	50	50	78
	415 V	kW	14	14	17	14	17	21	27	34	34	41	54	54	85
	440 V	kW	15	15	18	15	18	23	29	36	36	43	58	58	90
	500 V	kW	17	17	20	17	20	23	33	41	41	49	65	65	102
	660/690 V	kW	22	22	27	22	27	34	43	54	54	65	80	80	135
	1000 V	kW	–	–	–	–	–	–	–	–	–	–	–	–	120

(1) Please consult your Regional Sales Office.
*(2) With set of right-angled connectors **LA9F2100.***
*(3) With set of right-angled connectors **LA9F2600**.*
*(4) **LC1F780** to **LC1F2600**, **LC1G115** to **LC1G800**: the maximum control voltage must not exceed rated Uc for a temperature θ, 60 °C ≤ θ ≤ 70 °C.*

Coordination and standards

Increase in operational current by parallel connection of poles

Apply the following coefficients to the currents or power values given above; these coefficients take into account an often unbalanced current distribution between the poles:

- 2 poles in parallel: K = 1.6
- 3 poles in parallel: K = 2.25
- 4 poles in parallel: K = 2.8

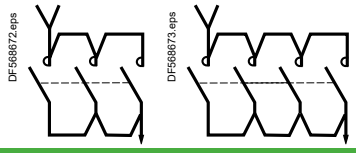

Selection according to required electrical durability, in category AC-1 (Ue ≤ 690 V)

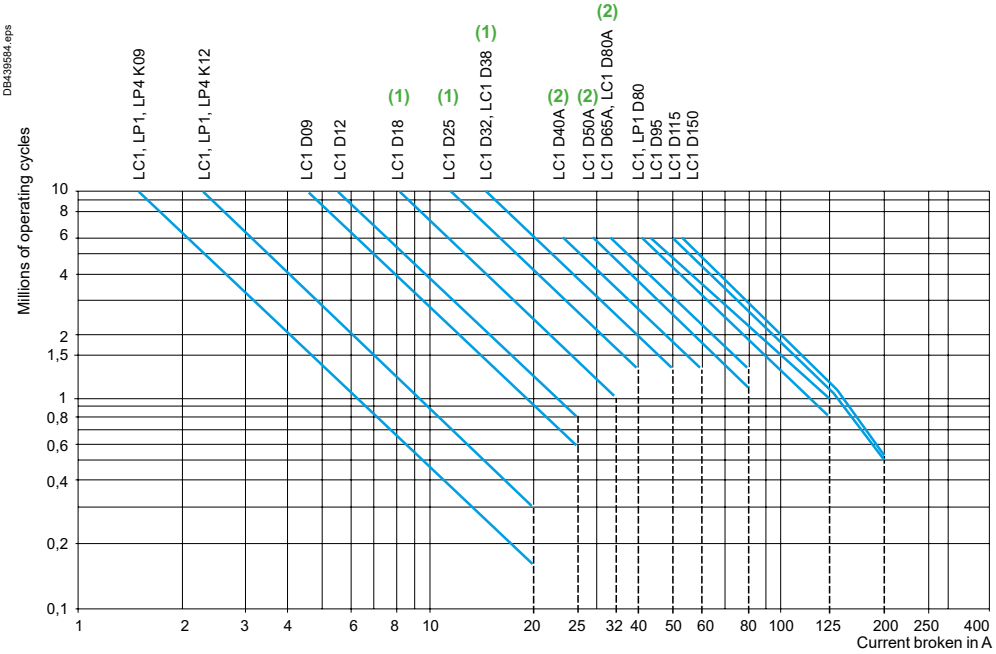

(1) For Deca Green, consult online data sheets for values.
(2) For Deca Green or DC coil, consult online data sheets for values.

Control of resistive circuits (cos ϕ ≥ 0.95).
The current broken (Ic) in category AC-1 is equal to the current (Ie) normally drawn by the load.

Example:

- Ue = 220 V - Ie = 50 A θ ≤ 40 °C - Ic = Ie = 50 A
- 2 million operating cycles required
- the above selection curves show the contactor rating needed: LC1D50A.

Life Is On Schneider Electric

LC1 D95	LC1 D115	LC1 D150	LC1 G115	LC1 G150	LC1 G185	LC1 G225	LC1 G265	LC1 G330	LC1 G400	LC1 G500	LC1 G630	LC1 G800	LC1 F780	LC1 F1000	LC1S F1200	LC1 F1250	LC1 F1400	LC1 F1700	LC1 F2100	LC1 F2600
600	600	600	300	300	300	300	300	300	300	300	300	300	600	600	300	300	200	200	200	200
50	120	120	185	185	185	185	240	2x150	2x185	2x240	–	–	–	–	–	–	–	–	–	–
–	–	–	2 25x6	2 25x6	2 25x6	2 25x6	2 30x10	2 30x10	2 30x10	2 30x10	2 50x10	2 50x10	2 100x5	3 100x5	2 50x8	2 100x5	2 100x5	3 100x5	4 100x5	3 100x10
125	200	200	250	275	305	330	385	440	550	700	1050	1050	1600	1250	1200	1260	1400	1700	2100(2)	2600
125	200	200	225	250	275	300	350	400	500	600	800	800	1350	(1)	1110	1060	1190	1450	1750(2)	2600(3)
80	160	160	210	235	255	280	330	380	470	540	640	640	1100	(1)	1020	900	1080	1300	1500(2)	2150(3)
45	80	80	90	100	110	120	140	160	200	240	320	320	550	(1)	400	420	474	570	700	840
49	83	83	90	100	110	120	150	170	210	250	330	330	570	(1)	410	440	490	600	780	920
78	135	135	160	170	190	210	240	280	350	420	550	550	950	(1)	700	730	820	1000	1200	1450
85	140	140	160	180	200	220	250	290	360	430	580	580	1000	(1)	720	760	850	1050	1300	1580
90	150	150	170	190	210	230	270	300	380	460	610	610	1050	(1)	750	810	910	1100	1350	1680
102	170	170	190	220	240	260	300	350	430	520	690	690	1200	–	850	920	1000	1250	1550	1910
135	235	235	270	300	330	360	420	480	600	720	960	960	1650	–	1200	1260	1400	1700	2100	2520
120	345	345	390	430	480	520	610	690	870	1040	1390	1390	2400	–	–	–	2100	2500	3100(2)	3820

(1) Please consult your Regional Sales Office.
*(2) With set of right-angled connectors **LA9F2100.***
*(3) With set of right-angled connectors **LA9F2600**.*
*(4) **LC1F780** to **LC1F2600**, **LC1G115** to **LC1G800**: the maximum control voltage must not exceed rated Uc for a temperature θ, 60 °C ⩽ θ ⩽ 70 °C.*

Selection according to required electrical durability, in category AC-1 (Ue ⩽ 690 V, θ ⩽ 40 °C)

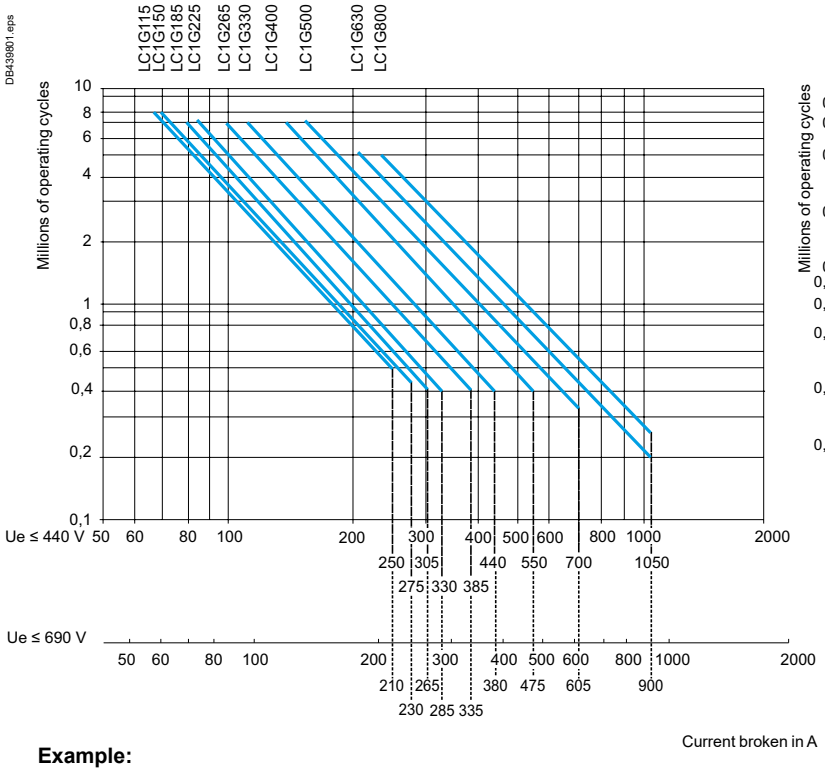

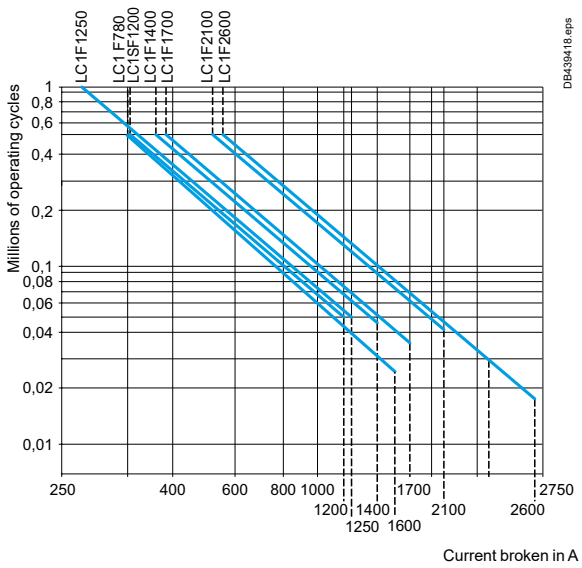

Example:

- Ue = 440 V - Ie = 500 A - θ ⩽ 40 °C - Ic = Ie = 500 A
- 0.8 million operating cycles required
- the above selection curves show the contactor rating needed: LC1G630.

Maximum breaking current

Category AC-2: slip ring motors - breaking the starting current.
Category AC-4: squirrel cage motors - breaking the starting current.

Contactor size			LC1/ LP1 K06	LC1/ LP1 K09	LC1/ LP1 K12	LC1 D09	LC1 D12	LC1 D18	LC1 D25	LC1 D32	LC1 D38	LC1 D40A
In category AC-4 (Ie max)	Ue ≤ 440 V Ie max broken = 6 x I motor	**A**	36	54	54	54	72	108	150	192	192	240
	440 V < Ue ≤ 690 V Ie max broken = 6 x I motor	**A**	26	40	40	40	50	70	90	105	105	150
Depending on the maximum operating rate (1) and the on-load factor, θ ≤ 60 °C (2)												
From 150 and 15 % to 300 and 10 %		**A**	20	30	30	30	40	45	75	80	80	110
From 150 and 20 % to 600 and 10 %		**A**	18	27	27	27	36	40	67	70	70	96
From 150 and 30 % to 1200 and 10 %		**A**	16	24	24	24	30	35	56	60	60	80
From 150 and 55 % to 2400 and 10 %		**A**	13	19	19	19	24	30	45	50	50	62
From 150 and 85 % to 3600 and 10 %		**A**	10	16	16	16	21	25	40	45	45	53

Contactor size			LC1 G115	LC1 G150	LC1 G185	LC1 G225	LC1 G265	LC1 G330	LC1 G400	LC1 G500	LC1 G630	LC1 G800
In category AC-4 (Ie max)	Ue ≤ 440 V Ie max broken = 6 x I motor	**A**	690	900	1110	1350	1590	1980	2400	3000	3780	4050
	440 V < Ue ≤ 690 V Ie max broken = 6 x I motor	**A**	530	640	780	1120	1400	1530	2160	2450	3400	3800
Depending on the maximum operating rate (1) and the on-load factor, θ ≤ 60 °C (2)												
Duty Cycle [Cycle/h]	**Load Factor [%]**		**LC1 G115**	**LC1 G150**	**LC1 G185**	**LC1 G225**	**LC1 G265**	**LC1 G330**	**LC1 G400**	**LC1 G500**	**LC1 G630**	**LC1 G800**
150	15	**A**	319	400	478	562	641	758	869	1001	1124	1204
300	10	**A**	250	314	375	441	502	593	679	779	870	923
150	20	**A**	304	383	457	538	613	726	834	962	1083	1165
600	10	**A**	183	230	275	324	369	437	502	579	653	703
150	30	**A**	280	352	421	495	565	668	766	883	993	1065
1200 (3)	10	**A**	131	164	196	230	262	309	353	404	449	473
150	55	**A**	239	300	358	421	480	568	652	750	842	902
2400 (3)	10	**A**	120	151	181	212	242	287	329	379	426	457
150	85	**A**	208	261	312	368	420	498	572	661	748	809
3600 (3)	10	**A**	120	151	181	212	242	287	329	379	426	457

(1) Do not exceed the maximum number of operating cycles.
(2) For temperatures higher than 60 °C, use a maximum operating rate value equal to 80 % of the actual value when selecting from the tables.
(3) Control Module can operate with higher duty cycle during limited time followed by proposed cooling time.

Operating cycles/hour	Cool time
1200	**10 min**
2400	**30 min**
3600	**60 min**

Counter current braking (plugging)

The current varies from the maximum plug-braking current to the rated motor current.
The making current must be compatible with the rated making and breaking capacities of the contactor.

As breaking normally takes place at a current value at or near the locked rotor current, the contactor can be selected using the criteria for categories AC-2 and AC-4.

Permissible AC-4 power rating for 200 000 operating cycles

Operational voltage		LC●/ LP● K06	LC●/ LP● K09	LC● LP● K12	LC● D09	LC● D12	LC● D18	LC● D25	LC● D32	LC● D38	LC● D40A
220/230 V (4)	**kW**	0.75	1.1	1.1	1.5	1.5	2.2	3	4	4	4
380/400 V (5)	**kW**	1.5	2.2	2.2	2.2	3.7	4	5.5	7.5	7.5	9
415 V	**kW**	1.5	2.2	2.2	2.2	3	3.7	5.5	7.5	7.5	9
440 V	**kW**	1.5	2.2	2.2	2.2	3	3.7	5.5	7.5	7.5	11
500 V	**kW**	2.2	3	3	3	4	5.5	7.5	9	9	11
660/690 V (6)	**kW**	3	4	4	4	5.5	7.5	10	11	11	15

(4) 230 V for LC1G115 to LC1G800 contactors.
(5) 400 V for LC1G115 to LC1G800 contactors.
(6) 690 V for LC1G115 to LC1G800 contactors.

LC1 D50A	LC1 D65A	LC1 D80A	LC1 D80	LC1 D95	LC1 D115	LC1 D150	LC1 F780
300	390	390	480	570	630	830	4260
170	210	210	250	250	540	640	2910
140	160	160	200	200	280	310	1600
120	148	148	170	170	250	280	1400
100	132	132	145	145	215	240	1100
80	110	110	120	120	150	170	820
70	90	90	100	100	125	145	710

LC● D50A	LC● D65A	LC1 D80A	LC● D80	LC● D95	LC1 D115	LC1 D150	LC1 G115	LC1 G150	LC1 G185	LC1 G225	LC1 G265	LC1 G330	LC1 G400	LC1 G500	LC1 G630	LC1 G800	LC1 F780
5.5	7.5	7.5	7.5	9	9	11	11	11	15	18.5	22	22	30	37	37	37	63
11	11	11	15	15	18.5	22	22	22	30	30	37	45	55	55	55	75	110
11	11	11	15	15	18.5	22	22	22	30	30	37	45	55	55	55	75	110
11	15	15	15	15	18.5	22	22	22	30	37	45	55	55	55	75	75	132
15	15	15	22	22	30	37	11	11	18.5	22	22	30	45	45	55	55	150
15	18.5	18.5	25	25	30	45	18.5	22	22	30	37	45	55	55	75	90	185

Selection according to required electrical durability, in categories AC-2 or AC-4 (Ue ⩽ 440 V)

Control of 3-phase asynchronous squirrel cage motors (AC-4) or slip ring motors (AC-2) with breaking whilst motor stalled.
The current broken (Ic) in AC-2 is equal to 2.5 x Ie.
The current broken (Ic) in AC-4 is equal to 6 x Ie (Ie = rated operational current of the motor).

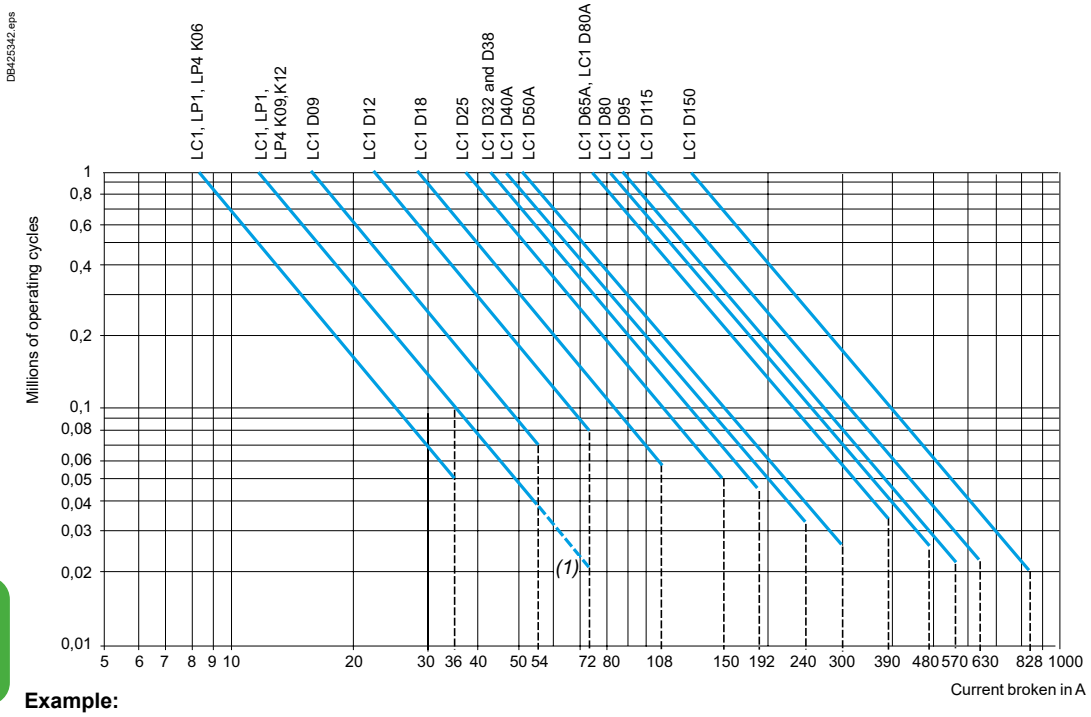

Example:

- asynchronous motor with P = 5.5 kW - Ue = 400 V - Ie = 11 A. Ic = 6 x Ie = 66 A
- or asynchronous motor with P = 5.5 kW - Ue = 415 V - Ie = 11 A. Ic = 6 x Ie = 66 A
- 200 000 operating cycles required
- the above selection curves show the contactor rating needed: LC1D25.

(1) The dotted lines are only applicable to LC1, LP1K12 contactors.

Selection according to required electrical durability, use in category AC-4 (440 V < Ue ⩽ 690 V)

Control of 3-phase asynchronous squirrel cage motors with breaking whilst motor stalled.
The current broken (Ic) in AC-2 is equal to 2.5 x Ie.
The current broken (Ic) in AC-4 is equal to 6 x Ie (Ie = rated operational current of the motor).

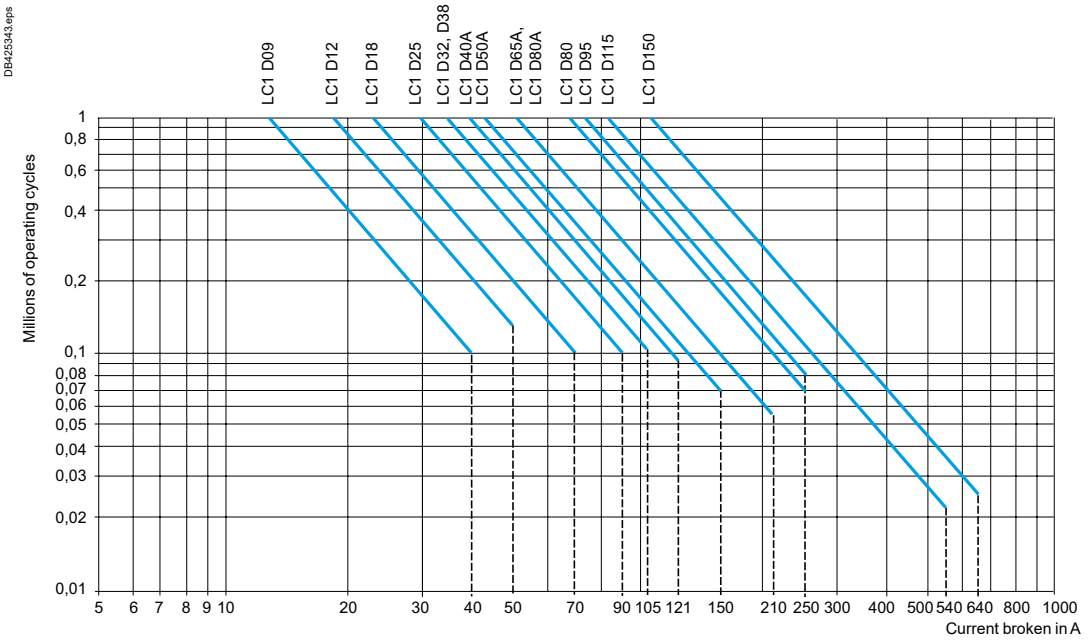

Life Is On Schneider Electric

Selection according to required electrical durability, in categories AC-2 or AC-4 (Ue ⩽ 440 V)

Control of 3-phase asynchronous squirrel cage motors (AC-4) or slip ring motors (AC-2) with breaking whilst motor stalled.
The current broken (Ic) in AC-4 is equal to 6 x Ie.
(Ie = rated operational current of the motor).

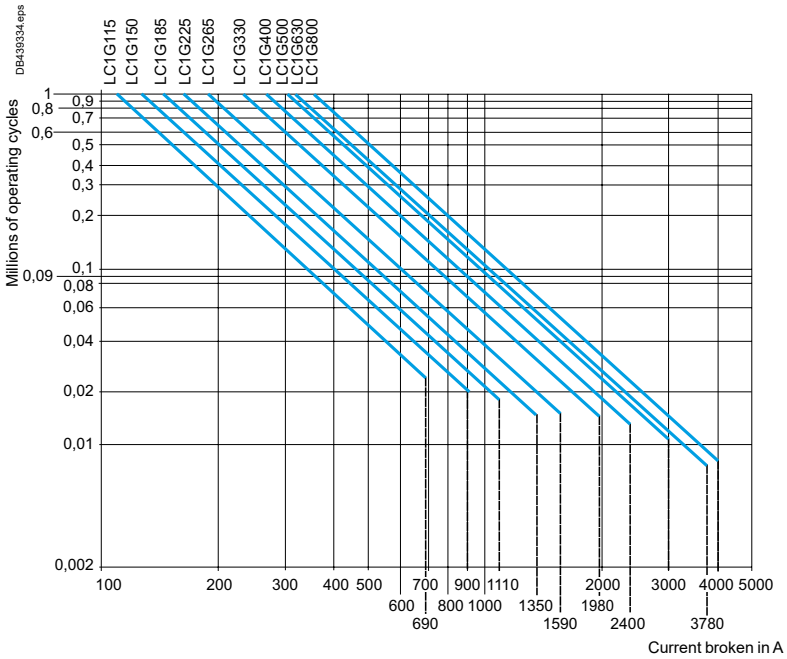

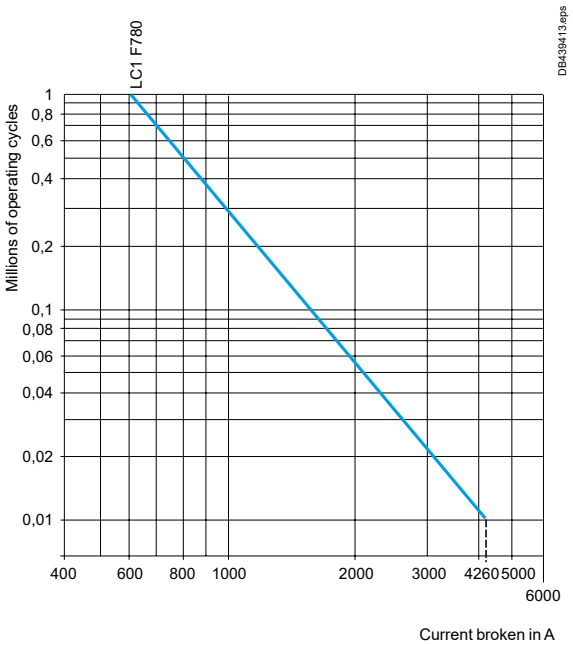

Example:

- asynchronous motor with P = 132 kW - Ue = 400 V - Ie = 230 A. Ic = 6 x Ie = 1380 A.
30 000 operating cycles required.
- the above selection curves show the contactor rating needed: LC1G330.

Selection according to required electrical durability, use in category AC-4 (440 V < Ue ⩽ 690 V)

Control of 3-phase asynchronous squirrel cage motors with breaking whilst motor stalled.
The current broken (Ic) in AC-4 is equal to 6 x Ie (Ie = rated operational current of the motor).

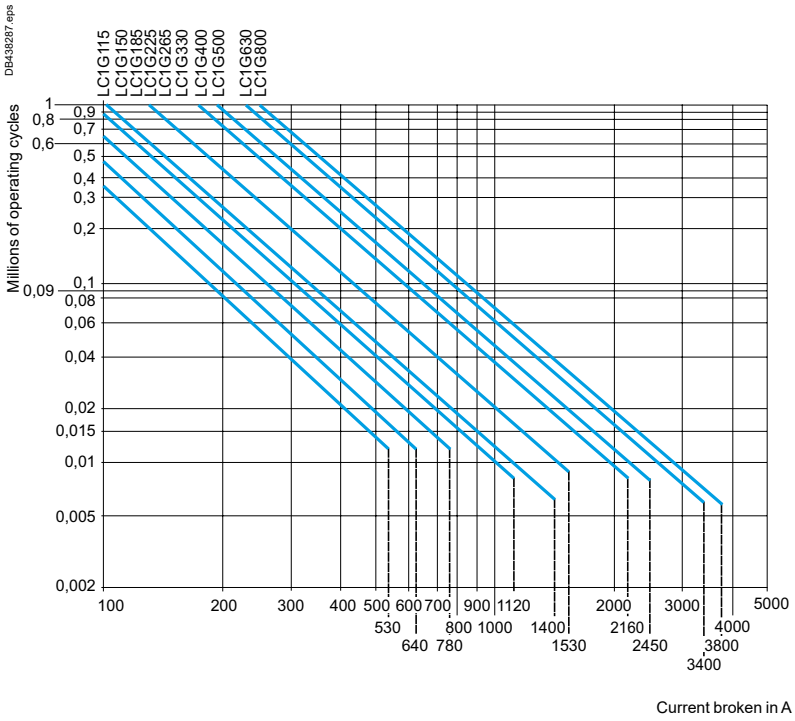

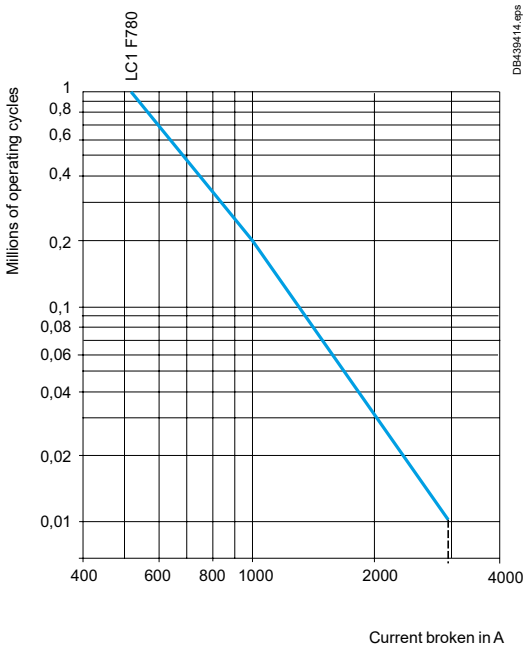

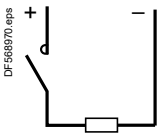

1 pole

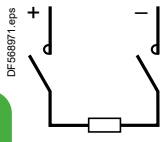

2 poles

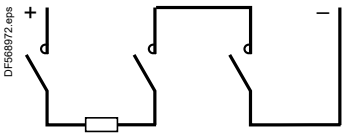

3 poles

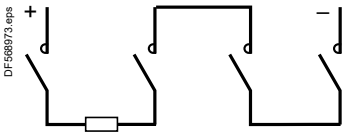

4 poles

Rated operational current (Ie) in Amperes, in utilisation category DC-1, resistive loads: time constant $\frac{L}{R}$ ≤ 1 ms, ambient temperature ≤ 60 °C

Rated operational voltage Ue	No. of poles connected in series	Contactor rating								
		LC1 D09	LC1 DT20	LC1 D12 DT25	LC1 D18 DT32	LC1 D25 DT40	LC1 D32	LC1 D38	LC1 D40A	LC1 DT60A
V										
24	1	20	20	20	25	32	40	40	50	50
	2	20	20	20	25	32	40	40	50	50
	3	20	20	20	25	32	40	40	50	50
	4	–	20	20	25	32	–	–	–	50
48/75	1	20	20	20	25	32	40	40	50	50
	2	20	20	20	25	32	40	40	50	50
	3	20	20	20	25	32	40	40	50	50
	4	–	20	20	25	32	–	–	–	50
125	1	4	4	4	4	7	7	7	7	7
	2	20	20	20	25	32	40	40	50	50
	3	20	20	20	25	32	40	40	50	50
	4	–	20	20	25	32	–	–	–	50
250	1	1	1	1	1	1	1	1	1	1
	2	4	4	4	4	7	7	7	7	7
	3	20	20	20	25	32	40	40	50	50
	4	–	20	20	25	32	–	–	–	50
300	1	–	–	–	–	–	–	–	–	–
	2	–	–	–	–	–	–	–	–	–
	3	4	4	4	4	7	7	7	7	–
	4	–	20	20	25	32	–	–	–	50
460	1	–	–	–	–	–	–	–	–	–
	2	–	–	–	–	–	–	–	–	–
	3	–	–	–	–	–	–	–	–	–
	4	–	–	–	–	–	–	–	–	–

Rated operational current (Ie) in Amperes, in utilisation category DC-2 to DC-5, inductive loads: time constant $\frac{L}{R}$ ≤ 15 ms, ambient temperature ≤ 60 °C

Rated operational voltage Ue	No. of poles connected in series	Contactor rating								
		LC1 D09	LC1 DT20	LC1 D12 DT25	LC1 D18 DT32	LC1 D25 DT40	LC1 D32	LC1 D38	LC1 D40A	LC1 DT60A
V										
24	1	20	20	20	25	32	40	40	50	50
	2	20	20	20	25	32	40	40	50	50
	3	20	20	20	25	32	40	40	50	50
	4	–	20	20	25	32	–	–	–	50
48/75	1	20	20	20	25	32	40	40	50	50
	2	20	20	20	25	32	40	40	50	50
	3	20	20	20	25	32	40	40	50	50
	4	–	20	20	25	32	–	–	–	50
125	1	2	2	2	2	3	3	3	4	4
	2	20	20	20	25	32	40	40	50	50
	3	20	20	20	25	32	40	40	50	50
	4	–	20	20	25	32	–	–	–	50
250	1	0.5	0.5	0.5	0.5	0.5	0.5	0.5	1	1
	2	2	2	2	2	3	3	3	4	4
	3	8	8	8	8	32	40	40	50	50
	4	–	20	20	25	32	–	–	–	50
300	1									
	2									
	3	2	2	2	2	3	3	3	3	3
	4	–	8	8	8	32	–	–	–	50
460	1	–	–	–	–	–	–	–	–	–
	2									
	3									
	4	–	–	–	–	–	–	–	–	–

Contactor rating																	
LC1 D50A	**LC1 D65A D80A**	**LC1 DT80A**	**LC1 D80**	**LC1 D95**	**LC1 D115**	**LC1 D150**	**LC1 G115**	**LC1 G150**	**LC1 G185**	**LC1 G225**	**LC1 G265**	**LC1 G330**	**LC1 G400**	**LC1 G500**	**LC1 G630**	**LC1 G800**	**LC1 F780**
65	65	65	100	100	200	200	225	250	275	300	350	400	500	600	950	950	1300
65	65	65	100	100	200	200	225	250	275	300	350	400	500	600	950	950	1300
65	65	65	100	100	200	200	225	250	275	300	350	400	500	600	950	950	1300
–	–	65	100	–	200	–	225	250	275	300	350	400	500	600	950	950	1300
65	65	65	100	100	200	200	225	250	275	300	350	400	500	600	950	950	1300
65	65	65	100	100	200	200	225	250	275	300	350	400	500	600	950	950	1300
65	65	65	100	100	200	200	225	250	275	300	350	400	500	600	950	950	1300
–	–	65	100	–	200	–	225	250	275	300	350	400	500	600	950	950	1300
7	7	7	12	12	12	12	205	225	250	270	315	360	450	540	855	855	1180
65	65	65	100	100	200	200	205	225	250	270	315	360	450	540	855	855	1180
65	65	65	100	100	200	200	225	250	275	300	355	405	505	605	960	960	1300
–	–	65	100	–	200	–	225	250	275	300	355	405	505	605	960	960	1300
1	1.5	1.5	2	2	10	10	–	–	–	–	–	–	–	–	–	–	–
7	7	7	12	12	200	200	180	205	225	245	285	325	405	485	770	770	1000
65	65	65	100	100	200	200	225	250	275	300	350	400	500	600	950	950	1300
–	–	65	100	–	200	–	225	250	275	300	350	400	500	600	945	945	1300
–	–	–	–	–	–	–	–	–	–	–	–	–	–	–	–	–	
–	–	–	–	–	–	–	–	–	–	–	–	–	–	–	–	–	
7	7	7	12	12	200	200	185	205	225	250	290	330	415	495	785	785	1000
–	–	65	100	–	200	–	225	250	275	300	350	400	500	600	950	950	1000
–	–	–	–	–	–	–	–	–	–	–	–	–	–	–	–	–	–
–	–	–	–	–	–	–	–	–	–	–	–	–	–	–	–	–	–
–	–	–	–	–	–	–	–	–	–	–	–	–	–	–	–	–	–
–	–	–	–	–	200	–	185	205	225	245	285	325	410	490	775	775	1000

Contactor rating																	
LC1 D50A	**LC1 D65A D80A**	**LC1 DT80A**	**LC1 D80**	**LC1 D95**	**LC1 D115**	**LC1 D150**	**LC1 G115**	**LC1 G150**	**LC1 G185**	**LC1 G225**	**LC1 G265**	**LC1 G330**	**LC1 G400**	**LC1 G500**	**LC1 G630**	**LC1 G800**	**LC1 F780**
65	65	65	100	100	200	200	225	250	275	300	350	400	500	600	950	950	1300
65	65	65	100	100	200	200	225	250	275	300	350	400	500	600	950	950	1300
65	65	65	100	100	200	200	225	250	275	300	350	400	500	600	950	950	1300
–	–	65	100	–	200	–	225	250	275	300	350	400	500	600	950	950	1300
65	65	65	100	100	200	200	225	250	275	300	350	400	500	600	950	950	1300
65	65	65	100	100	200	200	225	250	275	300	350	400	500	600	950	950	1300
65	65	65	100	100	200	200	225	250	275	300	350	400	500	600	950	950	1300
–	–	65	100	–	200	–	225	250	275	300	350	400	500	600	950	950	1300
4	4	4	5	5	10	10	-	-	-	-	-	-	-	-	-	-	–
65	65	65	100	100	200	200	190	210	230	250	290	335	420	500	795	795	1000
65	65	65	100	100	200	200	205	230	255	275	325	370	460	555	875	875	1000
–	–	65	100	–	200	–	205	230	255	275	325	370	460	555	875	875	1000
1	1.5	1.5	1	1	3	3	–	–	–	–	–	–	–	–	–	–	–
4	4	4	5	5	200	200	175	190	210	230	270	305	385	460	730	730	900
65	65	65	100	100	200	200	185	210	230	250	290	335	415	500	790	790	1000
–	–	65	100	–	200	–	225	250	275	300	355	405	505	605	960	960	1000
–	–	–	–	–	–	–	–	–	–	–	–	–	–	–	–	–	–
–	–	–	–	–	–	–	–	–	–	–	–	–	–	–	–	–	–
3	3	3	5	5	200	200	175	195	210	230	270	310	385	465	730	730	900
–	–	65	100	–	200	–	225	250	275	300	350	400	500	600	950	950	1000
–	–	–	–	–	–	–	–	–	–	–	–	–	–	–	–	–	–
–	–	–	–	–	–	–	–	–	–	–	–	–	–	–	–	–	–
–	–	–	–	–	–	–	–	–	–	–	–	–	–	–	–	–	–
–	–	–	–	–	200	–	175	190	210	230	270	310	385	460	730	730	800

Selection according to required electrical durability, use in categories DC-1 to DC-5

The criteria for contactor selection are:
- the rated operational current Ie
- the rated operational voltage Ue
- the utilisation category and the time constant L/R
- the required electrical durability.

Maximum operating rate (operating cycles)

The following limits must not be exceeded: 120 operating cycles/hour at rated operational current Ie.

Electrical durability

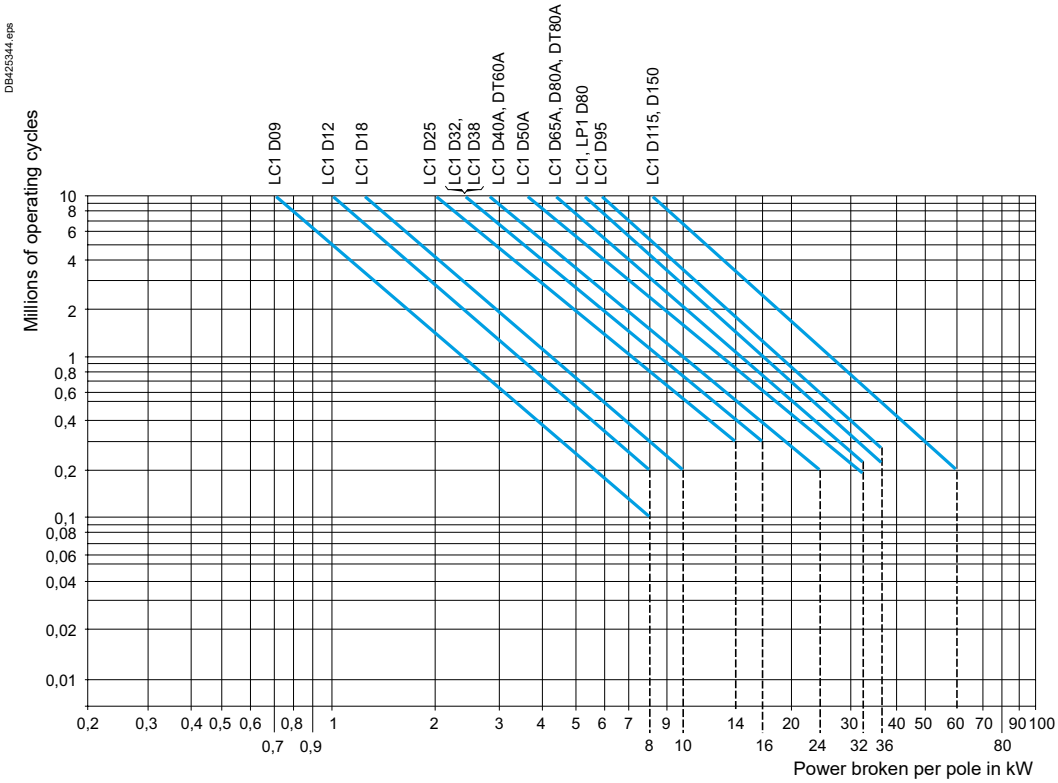

Example
Series wound motor - P = 1.5 kW - Ue = 200 V - Ie = 7.5 A.
Utilisation: reversing, inching.
- Utilisation category = DC-5.
- Select contactor LC1D09 with 3 poles in series.
- The power broken is: Pc total = 2.5 x 200 x 7.5 = 3.75 kW.
- The power broken per pole is: 1.25 kW.
- The electrical durability read from the curve is ⩾ 3 millions of operating cycles.

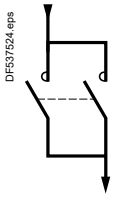

Use of poles in parallel

Electrical durability can be increased by using poles connected in parallel.

With N poles connected in parallel, the electrical durability becomes: electrical durability read from the curves x N x 0.7.

Note:
When the poles are connected in parallel, the maximum operational currents indicated on pages A5/108 and A5/109 must not be exceeded.

Note:
Ensure that the connections are made in such a way as to equalise the currents in each pole.

Selection according to required electrical durability, use in categories DC-1 to DC-5

Determining the electrical durability

The electrical durability can be read directly from the curves below, having previously calculated the power broken as follows:
P broken = U broken x I broken.
The tables below give the values of Uc and Ic for the various utilisation categories.

Power broken			
Utilisation categories	**U broken**	**I broken**	**P broken**
DC-1 Non inductive or slightly inductive loads	Ue	Ie	Ue x Ie
DC-2 Shunt wound motors, breaking whilst motor running	0.1 Ue	Ie	0.1 Ue x Ie
DC-3 Shunt wound motors, reversing, inching	Ue	2.5 Ie	Ue x 2.5 Ie
DC-4 Series wound motors, breaking whilst motor running	0.3 Ue	Ie	0.3 Ue x Ie
DC-5 Series wound motors, reversing, inching	Ue	2.5 Ie	Ue x 2.5 Ie

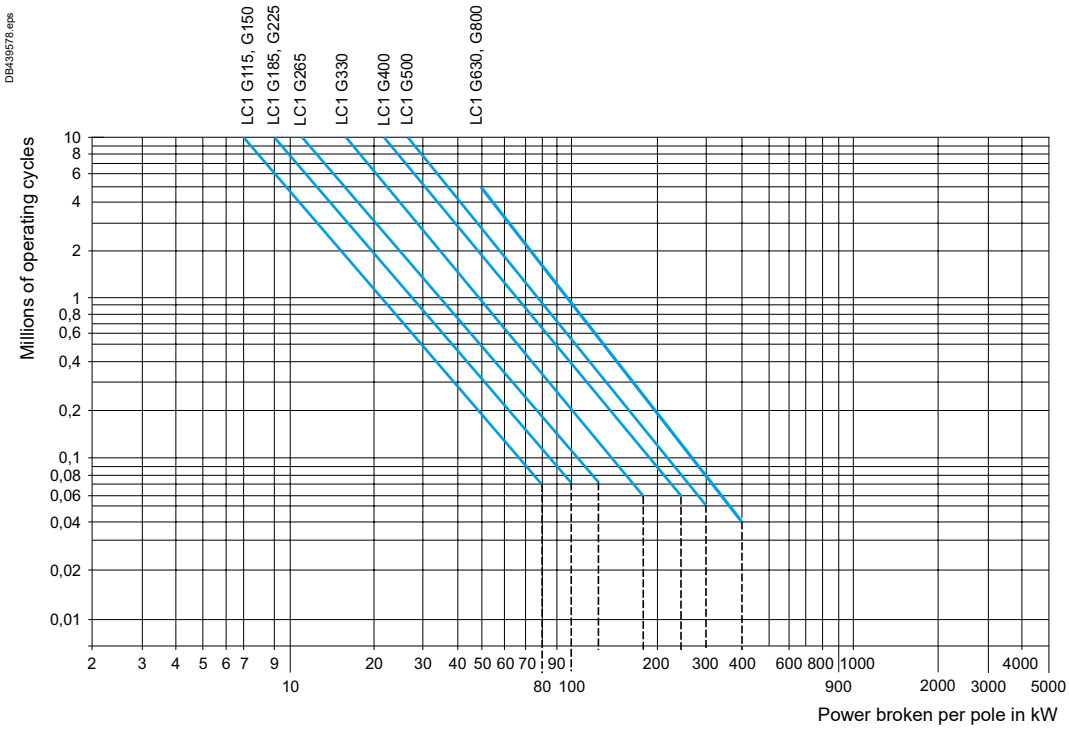

Example
Series wound motor: P = 40 kW - Ue = 200 V - Ie = 200 A.
Utilisation: reversing, inching.
- Utilisation category = DC-5.
- Select contactor LC1G150 with 2 poles in series.
- The power broken is: Pc total = 2.5 x 200 x 200 = 100 kW.
- The power broken per pole is 50 kW.
- The electrical durability read from the curve is 200000 operating cycles.

General

The operating conditions of lighting circuits have the following characteristics:
■ continuous duty: the switching device can remain closed for several days or even months
■ a dispersion factor of 1: all luminaires in the same group are switched on or off simultaneously
■ a relatively high temperature around the device due to the enclosure, the presence of fuses, or an unventilated control panel location.
This is why the operational current for lighting is lower than the value given for AC-1 duty.

Protection

The continuous duty current drawn by a lighting circuit is constant. In fact:
■ it is unlikely that the number of luminaires of an existing circuit will be modified
■ this type of circuit cannot create an overload of long duration.
It is therefore only necessary to provide short-circuit protection.
This can be provided by:
■ gG type fuses, or
■ modular circuit breakers.
Nevertheless, it is always possible and sometimes more economical (smaller cable size) to protect the circuit by a thermal overload relay and associated aM type uses.

Distribution system

Single-phase circuit, 220/240 V

The tables on pages A5/113 to A5/117 are based on a single-phase 220/240 V circuit and can therefore be applied directly in this case.

3-phase circuit, 380/415 V (with neutral)

The total number of lamps (N) to be switched simultaneously is divided into three equal groups, each connected between one phase and neutral. The contactor can then be selected from the 220/240 V single-phase tables for a number of lamps equal to $\frac{N}{3}$ lamps.

3-phase circuit, 220/240 V

The total number of lamps (N) to be switched simultaneously is divided into three equal groups, each connected between 2 phases (L1-L2), (L2-L3), (L3-L1).
The contactor can then be selected from the 220/240 V single-phase table for a number of lamps equal to $\frac{N}{\sqrt{3}}$ lamps.

Contactor selection tables

For the different types of lamps, the tables on pages A5/113 to A5/117 give the maximum number of lamps of unit power P (in Watts), which can be switched simultaneously for each size of contactor.
They are based on:
■ a 220/240 V single-phase circuit
■ an ambient temperature of 55 °C [1], taking into account the operating conditions (see General paragraph)
■ an electrical life of more than 10 years (200 days' operation per year).
They take into account:
■ the total current drawn (including ballast)
■ transient phenomena which occur at switch-on
■ the starting currents and their duration
■ the circulation of any harmonics which may be present.

Lamps with compensating capacitor C (µF) connected in parallel

Parallel connected compensating capacitors **C** cause a current peak at the moment of switch-on. To ensure that the value of this current peak remains compatible with the making characteristics of the contactors, the unit value of the capacitance must not exceed the following:

Switching contactor rating	**LC1 K09**	**LP1 K09**	**LC1 D09**	**LC1 D12**	**LC1 D18**	**LC1 D25**	**LC1 D32**	**LC1 D38**	**LC1 D40A**	**LC1 D50A**	**LC1 D65A**	**LC1 D80A**	**LC1 D80**
Maximum unit value C (µF) of parallel connected compensating capacitor	7	3	18	18	25	60	96	96	120	120	240	240	240

Switching contactor rating	**LC1 D80**	**LC1 D95**	**LC1 D115**	**LC1 D150**	**LC1 G185**	**LC1 G225**	**LC1 G265**	**LC1 G330**	**LC1 G400**	**LC1 G500**	**LC1 G630**	**LC1 G800**
Maximum unit value C (µF) of parallel connected compensating capacitor	240	240	300	360	800	1200	1700	2500	4000	6000	9000	10800

This value is independent of the number of lamps switched by the contactor.
(1) For an ambient temperature of 40 °C, multiply the number by 1.2.

Usual values

The tables show the following values:
- IB: value of current drawn by each lamp at its rated voltage,
- C: unit capacitance for each lamp,

corresponding to the values normally quoted by lamp manufacturers.

These values are given for an ambient temperature of 55 °C (for 40 °C, multiply the number by 1.2).

Incandescent and halogen lamps

P (W)	60	75	100	150	200	300	500	750	1000	
IB (A)	**0.27**	**0.34**	**0.45**	**0.68**	**0.91**	**1.40**	**2.30**	**3.40**	**4.60**	**LC1**
Max. no. of lamps according to P (W)	35	28	21	14	10	6	4	2	2	**K09**
	59	47	35	23	17	11	7	4	3	**D09, D12**
	77	61	46	30	23	15	9	6	4	**D18**
	92	73	55	36	27	18	11	7	5	**D25**
	129	103	77	51	38	25	15	10	7	**D32, D38**
	163	129	97	64	48	31	19	13	9	**D40A**
	207	164	124	82	62	40	24	16	12	**D50A, D65A, D80A**
	296	235	177	117	88	57	34	23	17	**D80, D95**
	430	340	256	170	126	82	50	34	24	**D115**
	466	370	280	184	138	90	54	36	26	**D150**
	710	564	426	282	210	136	82	56	40	**G185**
	770	610	462	304	228	148	90	60	44	**G225**
	888	704	532	352	262	170	104	70	52	**G265**
	1006	800	604	400	298	194	118	80	58	**G330**
	1274	1010	764	504	378	244	148	100	74	**G400**
	1718	1364	1030	682	508	330	200	136	100	**G500**
	2328	1850	1396	924	690	448	272	184	136	**G630**
	2776	2204	1666	1102	824	534	326	220	162	**G800**

Mixed lighting lamps

P (W)	100	160	250	500	1000	
IB (A)	**0.45**	**0.72**	**1.10**	**2.30**	**4.50**	**LC1**
Max. no. of lamps according to P (W)	21	13	8	4	2	**K09**
	35	22	14	7	3	**D09, D12**
	46	29	18	9	4	**D18**
	55	36	23	11	5	**D25**
	77	48	30	15	7	**D32, D38**
	97	61	38	19	9	**D40A**
	124	77	49	24	12	**D50A, D65A, D80A**
	177	111	70	34	17	**D80, D95**
	256	160	104	50	26	**D115**
	280	174	114	54	28	**D150**
	426	266	174	82	42	**G185**
	462	288	188	90	46	**G225**
	532	332	218	104	52	**G265**
	604	378	246	118	60	**G330**
	764	478	312	150	76	**G400**
	1030	644	422	202	102	**G500**
	1398	874	572	272	140	**G630**
	1666	1040	680	326	166	**G800**

Usual values

The tables show the following values:
- IB: value of current drawn by each lamp at its rated voltage
- C: unit capacitance for each lamp

corresponding to the values normally quoted by lamp manufacturers.

These values are given for an ambient temperature of 55 °C (for 40 °C, multiply the number by 1.2).

Fluorescent lamps with starter. Single fitting

	Non corrected					With parallel correction					
P (W)	**20**	**40**	**65**	**80**	**110**	**20**	**40**	**65**	**80**	**110**	
IB (A)	**0.39**	**0.45**	**0.70**	**0.80**	**1.2**	**0.17**	**0.26**	**0.42**	**0.52**	**0.72**	
C (µF)	**–**	**–**	**–**	**–**	**–**	**5**	**5**	**7**	**7**	**16**	**LC1**
Max. no. of lamps according to P (W)	24	21	13	12	8	56	36	22	18	–	**K09**
	41	35	22	20	13	94	61	38	30	22	**D09, D12**
	53	46	30	26	17	123	80	50	40	29	**D18**
	66	57	37	32	21	152	100	61	50	36	**D25**
	89	77	50	43	29	205	134	83	67	48	**D32, D38**
	112	97	62	55	36	258	169	104	84	61	**D40A**
	143	124	80	70	46	329	215	133	107	77	**D50A, D65A, D80A**
	205	177	114	100	66	470	367	190	153	111	**D80, D95**
	410	354	228	200	132	940	614	380	306	222	**D115, D150**
	492	426	274	240	160	1128	738	456	368	266	**G185**
	532	462	296	260	172	1224	800	490	400	288	**G225**
	614	532	342	300	200	1412	922	570	462	332	**G265**
	696	604	388	340	226	1600	1046	648	522	378	**G330**
	882	764	490	430	286	2024	1322	818	662	478	**G400**
	1190	1030	662	580	386	2728	1724	1104	892	644	**G500**
	1612	1398	698	786	524	3700	2418	1498	1210	874	**G630, G800**

Fluorescent lamps with starter. Twin fitting

	Non corrected					With series correction					
P (W)	**2x20**	**2x40**	**2x65**	**2x80**	**2x110**	**2x20**	**2x40**	**2x65**	**2x80**	**2x110**	
IB (A)	**2x0.22**	**2x0.41**	**2x0.67**	**2x0.82**	**2x1.1**	**2x0.13**	**2x0.24**	**2x0.39**	**2x0.48**	**2x0.65**	**LC1**
Max. no. of lamps according to P (W)	2x21	2x11	2x7	2x5	2x4	2x36	2x20	2x12	2x10	2x7	**K09**
	2x36	2x18	2x10	2x8	2x6	2x60	2x32	2x20	2x16	2x12	**D09, D12**
	2x46	2x24	2x14	2x12	2x8	2x80	2x42	2x26	2x20	2x16	**D18**
	2x58	2x30	2x18	2x14	2x10	2x100	2x54	2x32	2x26	2x20	**D25**
	2x78	2x42	2x26	2x20	2x14	2x134	2x72	2x44	2x36	2x26	**D32, D38**
	2x100	2x52	2x32	2x26	2x18	2x168	2x90	2x56	2x44	2x32	**D40A**
	2x126	2x68	2x40	2x34	2x24	2x214	2x116	2x70	2x58	2x42	**D50A, D65A, D80A**
	2x180	2x96	2x58	2x48	2x36	2x306	2x166	2x102	2x82	2x60	**D80, D95**
	2x360	2x194	2x118	2x96	2x72	2x614	2x332	2x204	2x166	2x122	**D115, D150**
	2x436	2x234	2x142	2x116	2x86	2x738	2x400	2x246	2x200	2x148	**G185**
	2x472	2x254	2x154	2x126	2x94	2x800	2x432	2x266	2x216	2x160	**G225**
	2x544	2x292	2x178	2x146	2x108	2x922	2x500	2x308	2x250	2x184	**G265**
	2x618	2x332	2x202	2x166	2x124	2x1046	2x566	2x348	2x282	2x208	**G330**
	2x782	2x420	2x256	2x210	2x156	2x1322	2x716	2x440	2x358	2x264	**G400**
	2x1054	2x566	2x346	2x282	2x210	2x1784	2x966	2x594	2x482	2x356	**G500**
	2x1430	2x766	2x468	2x384	2x286	2x2418	2x1310	2x806	2x654	2x484	**G630, G800**

Usual values

The tables show the following values:
- IB: value of current drawn by each lamp at its rated voltage
- C: unit capacitance for each lamp

corresponding to the values normally quoted by lamp manufacturers.

These values are given for an ambient temperature of 55 °C (for 40 °C, multiply the number by 1.2).

Fluorescent lamps without starter. Single fitting

	Non corrected					With parallel correction					
P (W)	**20**	**40**	**65**	**80**	**110**	**20**	**40**	**65**	**80**	**110**	
IB (A)	**0.43**	**0.55**	**0.80**	**0.95**	**1.4**	**0.19**	**0.29**	**0.46**	**0.57**	**0.79**	
C (µF)	**–**	**–**	**–**	**–**	**–**	**5**	**5**	**7**	**7**	**16**	**LC1**
Max. no. of lamps according to P (W)	22	17	12	10	6	50	33	20	16	–	**K09**
	37	29	20	16	11	84	55	34	28	20	**D09, D12**
	48	38	26	22	15	110	72	45	36	26	**D18**
	60	47	32	27	18	136	89	56	45	32	**D25**
	97	63	43	36	25	184	101	76	61	44	**D32, D38**
	102	80	55	46	31	231	151	95	77	55	**D40A**
	130	101	70	58	40	294	193	121	98	70	**D50A, D65A, D80A**
	186	145	100	84	57	421	275	173	140	101	**D80, D95**
	372	290	200	168	114	842	550	346	280	202	**D115, D150**
	446	348	240	202	136	1010	662	416	336	242	**G185**
	484	378	260	218	148	1094	716	452	364	262	**G225**
	558	436	300	252	170	1262	828	522	420	304	**G265**
	632	494	340	286	194	1432	938	590	476	344	**G330**
	800	624	430	362	246	1810	1186	748	604	434	**G400**
	1078	844	580	488	330	2442	1600	1008	814	586	**G500**
	1462	1144	786	662	448	3310	2168	1366	1104	796	**G630, G800**

Fluorescent lamps without starter. Twin fitting

	Non corrected					With series correction					
P (W)	**2x20**	**2x40**	**2x65**	**2x80**	**2x110**	**2x20**	**2x40**	**2x65**	**2x80**	**2x110**	
IB (A)	**2x0.25**	**2x0.47**	**2x0.76**	**2x0.93**	**2x1.3**	**2x0.14**	**2x0.26**	**2x0.43**	**2x0.53**	**2x0.72**	**LC1**
Max. no. of lamps according to P (W)	2x19	2x10	2x6	2x5	2x3	2x34	2x18	2x11	2x9	2x6	**K09**
	2x32	2x16	2x10	2x8	2x6	2x56	2x30	2x18	2x14	2x10	**D09, D12**
	2x42	2x22	2x12	2x10	2x8	2x74	2x40	2x24	2x18	2x14	**D18**
	2x52	2x26	2x16	2x12	2x10	2x92	2x50	2x30	2x24	2x18	**D25**
	2x70	2x36	2x22	2x18	2x12	2x124	2x66	2x40	2x32	2x24	**D32, D38**
	2x88	2x46	2x28	2x22	2x16	2x156	2x84	2x50	2x40	2x30	**D40A**
	2x112	2x58	2x36	2x30	2x20	2x200	2x106	2x64	2x52	2x38	**D50A, D65A, D80A**
	2x160	2x84	2x52	2x42	2x30	2x234	2x152	2x92	2x74	2x54	**D80, D95**
	2x320	2x170	2x104	2x86	2x60	2x570	2x306	2x186	2x150	2x110	**D115, D150**
	2x384	2x204	2x126	2x102	2x74	2x686	2x368	2x222	2x180	2x132	**G185**
	2x416	2x220	2x136	2x112	2x80	2x742	2x400	2x242	2x196	2x144	**G225**
	2x480	2x254	2x158	2x128	2x92	2x856	2x462	2x278	2x226	2x166	**G265**
	2x544	2x288	2x178	2x146	2x104	2x970	2x522	2x316	2x256	2x188	**G330**
	2x688	2x366	2x226	2x184	2x132	2x1228	2x662	2x400	2x324	2x238	**G400**
	2x928	2x494	2x304	2x248	2x178	2x1656	2x892	2x540	2x438	2x322	**G500**
	2x1258	2x668	2x414	2x338	2x242	2x2246	2x1210	2x730	2x592	2x436	**G630, G800**

Usual values

The tables show the following values:
- IB: value of current drawn by each lamp at its rated voltage
- C: unit capacitance for each lamp

corresponding to the values normally quoted by lamp manufacturers.

These values are given for an ambient temperature of 55 °C (for 40 °C, multiply the number by 1.2).

Low pressure sodium vapour lamps

	Non corrected							With parallel correction							
P (W)	**35**	**55**	**90**	**135**	**150**	**180**	**200**	**35**	**55**	**90**	**135**	**150**	**180**	**200**	
IB (A)	**1.2**	**1.6**	**2.4**	**3.1**	**3.2**	**3.3**	**3.4**	**0.3**	**0.4**	**0.6**	**0.9**	**1**	**1.2**	**1.3**	
C (µF)	**–**	**–**	**–**	**–**	**–**	**–**	**–**	**17**	**17**	**25**	**36**	**36**	**36**	**36**	**LC1**
Max. no. of lamps according to P (W)	6	5	3	2	2	2	2	–	–	–	–	–	–	–	**K09**
	10	7	5	3	3	3	3	40	30	–	–	–	–	–	**D09, D12**
	12	9	6	4	4	4	4	50	37	25	–	–	–	–	**D18**
	15	11	7	6	5	5	5	63	47	31	21	19	15	14	**D25**
	21	16	10	8	8	7	7	86	65	43	28	26	21	20	**D32, D38**
	27	20	13	10	10	10	9	110	82	55	36	33	27	25	**D40A**
	35	26	17	13	13	12	12	140	105	70	46	42	35	32	**D50A, D65A, D80A**
	50	37	25	19	18	18	17	200	150	100	66	60	50	46	**D80, D95**
	100	75	50	38	36	36	34	400	300	200	132	120	100	92	**D115, D150**
	140	104	70	54	52	50	48	560	420	280	186	168	140	128	**G185**
	152	114	76	58	56	54	54	606	454	302	202	182	152	140	**G225**
	174	130	88	68	66	64	62	700	524	350	232	210	174	162	**G265**
	198	148	98	76	74	72	70	792	594	396	264	238	198	182	**G330**
	250	188	124	96	94	90	88	1002	752	502	334	300	250	252	**G400**
	338	254	168	130	126	122	118	1352	1014	676	450	406	338	312	**G500**
	496	372	248	192	186	180	174	1982	1488	992	660	594	496	458	**G630, G800**

High pressure sodium vapour lamps

	Non corrected					With parallel correction					
P (W)	**150**	**250**	**400**	**700**	**1000**	**150**	**250**	**400**	**700**	**1000**	
IB (A)	**1.9**	**3.2**	**5**	**8.8**	**12.4**	**0.84**	**1.4**	**2.2**	**3.9**	**5.5**	
C (µF)	**–**	**–**	**–**	**–**	**–**	**20**	**32**	**48**	**96**	**120**	**LC1**
Max. no. of lamps according to P (W)	4	2	1	–	–	–	–	–	–	–	**K09**
	6	3	2	1	–	–	–	–	–	–	**D09, D12**
	7	4	3	1	1	17	–	–	–	–	**D18**
	10	5	3	2	1	22	13	8	–	–	**D25**
	13	8	5	2	2	30	18	11	6	–	**D32, D38**
	17	10	6	3	2	39	23	15	8	6	**D40A**
	22	13	8	4	3	50	30	19	10	7	**D50A, D65A, D80A**
	31	18	12	6	4	71	42	27	15	10	**D80, D95**
	62	36	24	12	8	142	84	54	30	20	**D115, D150**
	88	52	34	18	14	200	120	76	42	30	**G185**
	96	56	36	20	16	216	130	82	46	32	**G225**
	110	66	42	24	18	250	150	94	54	38	**G265**
	124	74	48	26	20	282	170	108	60	42	**G330**
	158	94	60	34	24	358	214	136	76	54	**G400**
	214	126	80	46	32	482	290	184	104	74	**G500**
	312	186	118	68	48	708	424	270	152	108	**G630, G800**

Usual values

The tables show the following values:
- IB: value of current drawn by each lamp at its rated voltage
- C: unit capacitance for each lamp

corresponding to the values normally quoted by lamp manufacturers.

These values are given for an ambient temperature of 55 °C (for 40 °C, multiply the number by 1.2).

High pressure mercury vapour lamps

	Non corrected							With parallel correction							
P (W)	**50**	**80**	**125**	**250**	**400**	**700**	**1000**	**50**	**80**	**125**	**250**	**400**	**700**	**1000**	
IB (A)	**0.54**	**0.81**	**1.20**	**2.30**	**4.10**	**6.80**	**9.90**	**0.3**	**0.45**	**0.67**	**1.3**	**2.3**	**3.8**	**5.5**	
C (µF)	**–**	**–**	**–**	**–**	**–**	**–**	**–**	**10**	**10**	**10**	**18**	**25**	**40**	**60**	**LC1**
Max. no. of lamps according to P (W)	14	9	6	3	1	–	–	–	–	–	–	–	–	–	**K09**
	22	14	9	5	2	1	1	40	26	17	9	–	–	–	**D09, D12**
	27	18	12	6	3	2	1	50	33	22	11	6	–	–	**D18**
	35	23	15	8	4	2	1	63	42	28	14	8	5	3	**D25**
	48	32	21	11	6	3	2	86	57	38	20	11	6	4	**D32, D38**
	61	40	27	14	8	4	3	110	73	49	25	14	8	6	**D40A**
	77	51	34	17	10	6	4	140	93	62	32	18	11	7	**D50A, D65A, D80A**
	111	74	49	26	14	8	6	200	133	89	46	26	15	10	**D80, D95**
	222	148	100	52	28	16	12	400	266	178	92	52	30	20	**D115, D150**
	310	206	140	72	40	24	17	560	372	250	128	72	44	30	**G185**
	336	224	152	78	44	26	18	606	404	272	140	78	48	32	**G225**
	388	258	174	90	50	30	20	700	466	312	162	90	54	38	**G265**
	440	294	198	102	58	34	24	792	528	354	182	102	62	42	**G330**
	556	372	250	130	72	44	30	1002	668	448	232	130	78	54	**G400**
	752	500	338	176	98	60	40	1352	902	606	312	176	106	74	**G500**
	1102	734	496	258	144	88	60	1982	1322	888	458	258	156	108	**G630, G800**

Metal iodine vapour lamps

	Non corrected				With parallel correction				
P (W)	**250**	**400**	**1000**	**2000**	**250**	**400**	**1000**	**2000**	
IB (A)	**2.5**	**3.6**	**9.5**	**20**	**1.4**	**2**	**5.3**	**11.2**	
C (µF)	**–**	**–**	**–**	**–**	**32**	**32**	**64**	**140**	**LC1**
Max. no. of lamps according to P (W)	3	2	–	–	–	–	–	–	**K09**
	4	3	1	–	–	–	–	–	**D09, D12**
	6	4	1	–	–	–	–	–	**D18**
	7	5	2	–	13	9	–	–	**D25**
	10	7	2	1	18	13	4	–	**D32, D38**
	13	9	3	1	23	16	6	–	**D40A**
	16	11	4	2	30	21	7	–	**D50A, D65A, D80A**
	24	16	6	3	42	30	11	5	**D80, D95**
	48	32	12	6	84	60	22	10	**D115, D150**
	66	46	18	8	120	84	32	14	**G185**
	72	50	20	10	130	90	34	16	**G225**
	84	58	22	12	150	104	40	18	**G265**
	94	66	24	14	170	118	44	20	**G330**
	120	84	32	16	214	150	56	26	**G400**
	162	112	42	20	290	202	76	36	**G500**
	238	164	62	30	424	298	112	52	**G630, G800**

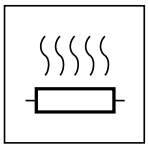

Selection

General

A heating circuit is a power switching circuit supplying one or more resistive heating elements switched by a contactor. The same general rules apply as for motor circuits, except that heating circuits are not normally subjected to overload currents. It is therefore only necessary to provide short-circuit protection.

Characteristics of heating elements

The examples below are based on resistive heating elements used for industrial furnaces or for the heating of buildings (infra-red or resistive radiant type, convector heaters, closed loop heating circuits, etc.). The variation in resistance values between hot and cold states causes a current peak at switch-on which never exceeds 2 to 3 times the rated operational current (In). This initial peak does not recur during normal operation where subsequent switching is thermostatically controlled. The rated power and current of a heater are given for the normal operating temperature.

Protection

The steady state current drawn by a heating circuit is constant when the voltage is stable. In fact:
- it is unlikely that the number of loads in an existing circuit will be modified
- this type of circuit cannot create overloads. It is therefore only necessary to provide short-circuit protection.

This can be provided by:
- gG type fuses, or
- modular circuit breakers.

Nevertheless, it is always possible and sometimes more economical (smaller cable size) to protect the circuit by a thermal overload relay and associated aM type fuses.

Switching, control, protection

A heating element or group of heating elements of a given power may be either single-phase or 3-phase and may be supplied from a 220/127 V or a 400/230 V distribution system. Excluding a single-phase 127 V system (which is no longer commonly used), the following 3 types of circuit arrangement are possible:
- single-phase, 2-pole switching
- single-phase, 4-pole switching
- 3-phase switching

Component selection according to the power switched

The combinations suggested below are based on an ambient temperature of 55 °C (60 °C for Giga contactors LC1G) and for powers at the nominal voltage, but they also ensure switching in the event of prolonged overloads up to 1.05 Ue.

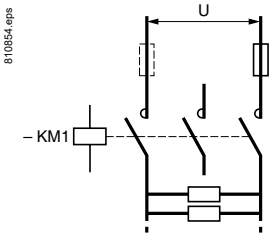

Circuit controlled by 2 poles of the contactor.

Single-phase, 2-pole switching

Maximum power (kW)				Contactor rating
220/240 V	380/415 V	660/690 V	1000 V	
3.5	6.5	11	–	**LC1K09, LP1K09**
4.5	8	14	–	**LC1D12**
6	10.5	18.5	–	**LC1D18**
7	13	22.5	–	**LC1D25**
10	18	30.5	–	**LC1D32, LC1D38**
13	22.5	39.5	–	**LC1D40A**
16.5	28.5	43.5	–	**LC1D65A, LC1D80A**
24	42	73	82.5	**LC1D80, LP1D80**
44	76	118	157	**LC1D115, LC1D150**
270	460	715	945	**LC1F780**

Maximum power (kW)				Contactor rating
230 V	400 V	690 V	1000 V	
40	75	125	185	**LC1G115**
45	80	140	205	**LC1G150**
50	90	155	225	**LC1G185**
55	100	170	250	**LC1G225**
65	115	200	290	**LC1G265**
75	130	230	330	**LC1G330**
95	165	285	415	**LC1G400**
115	200	345	500	**LC1G500**
150	265	460	665	**LC1G630**
150	265	460	665	**LC1G800**

Life Is On Schneider Electric

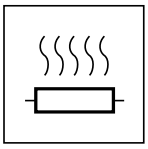

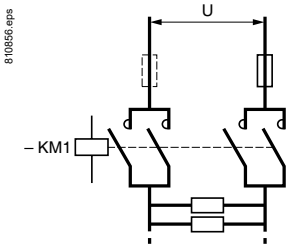

Circuit controlled by a 4-pole contactor with the poles parallel connected in pairs using appropriate connecting links.
This solution enables the control of power values approximately equivalent to those controlled by the same contactor on 3-phase.

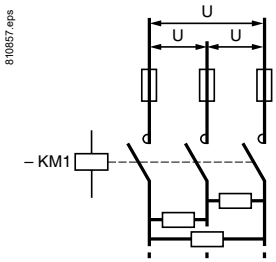

Circuit controlled by 3 poles of the contactor.

Component selection according to the power switched

Single-phase, 4-pole switching

Maximum power (kW)				Contactor rating
220/240 V	**380/415 V**	**660/690 V**	**1000 V**	
4.5	8	13.5	–	**LC1K09004, LP1K09004**
7	13	22.5	–	**LC1DT25**
12	21	36.5	–	**LC1DT40**
26	45.5	79.5	–	**LC1DT80A**
38	66	117.5	132	**LC1D80004, LP1D80004**
425	735	1140	1520	**LC1F7804**

Maximum power (kW)				Contactor rating
230 V	**400 V**	**690 V**	**1000 V**	
65	120	205	300	**LC1G1154**
75	130	230	330	**LC1G1504**
80	145	250	365	**LC1G1854**
90	160	275	400	**LC1G2254**
105	185	320	465	**LC1G2654**
120	210	365	530	**LC1G3304**
150	265	460	665	**LC1G4004**
180	320	550	800	**LC1G5004**
245	425	735	1065	**LC1G6304**
245	425	735	1065	**LC1G8004**

3-phase switching

Maximum power (kW)				Contactor rating
220/240 V	**380/415 V**	**660/690 V**	**1000 V**	
4.5	8	13.5	–	**LC1K09, LP1K09**
7	13	22.5	–	**LC1D12**
10	18	30.5	–	**LC1D18**
13	22.5	39.5	–	**LC1D25**
18	31	52.5	–	**LC1D32, LC1D38**
22.5	38	68	–	**LC1D40A**
28.5	49	86	–	**LC1D65A, LC1D80A**
40.5	70.5	126	135.5	**LC1D80, LP1D80**
83	140	235	345	**LC1D115, LC1D150**
570	1000	1650	2400	**LC1F780**

Maximum power (kW)				Contactor rating
230 V	**400 V**	**690 V**	**1000 V**	
70	125	220	320	**LC1G115**
80	140	245	360	**LC1G150**
90	155	270	395	**LC1G185**
95	170	295	430	**LC1G225**
115	200	345	505	**LC1G265**
130	230	395	575	**LC1G330**
165	285	495	720	**LC1G400**
195	345	595	865	**LC1G500**
265	460	795	1150	**LC1G630**
265	460	795	1150	**LC1G800**

Application example

For a 220 V, 50 Hz, single-phase circuit supplying a total heating load of 12.5 kW.
Select a 3-pole contactor **LC1D65A**.

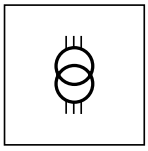

Operating conditions

Maximum ambient temperature: 55 °C.

When a transformer is switched on, there is generally an initial current surge which reaches its peak value almost instantaneously and then decreases in a largely exponential manner to quickly reach its steady state value.

The value of this current depends on:
- the characteristics of the magnetic circuit and of the windings (cross sectional area of the core, rated inductance, number of turns, layout and size of the windings, ...)
- the performance of the magnetic laminations used
- the magnetic state of the circuit and the instantaneous value of the a.c. mains voltage at the moment of switch-on.

The inrush current at the moment of switch-on can reach 20 to 40 times the rated current for the various kVA power ratings in the tables below. This value is independent of the “no-load” or “on-load” state of the transformer.

Contactor selection

The peak magnetising current of the transformer must be lower than the values given in the tables below.
Maximum operating rate: 120 operating cycles/hour.

Contactor rating			LC1/ LP1 K06	LC1/ LP1 K09	LC1 D09	LC1 D12	LC1 D18	LC1 D25	LC1 D32	LC1 D38	LC1 D40A	LC1 D50A	LC1 D65A D80A	LC1 D80	LC1 D95	LC1 D115	LC1 D150
Maximum permissible current peak at switch-on		A	160	225	350	w350	420	630	770	770	1100	1250	1400	1550	1650	1800	2000
Maximum operational power [1]	220 V 240 V	kVA	2	2.5	4	4	5	7	8.5	8.5	14	16	18	19.5	19.5	25	25
	380 V 400 V	kVA	3.5	5	7	7	8	12.5	15	15	24	27	31	34	34	50	50
	415 V 440 V	kVA	4	5.5	8	8	9	14	17	17	28	32	36	39	39	55	55
	500 V	kVA	5	7	9	9	11	16.5	20	20	32	36	40	45	45	65	65
	660 V 690 V	kVA	6	8.5	12	12	14	21.5	26.5	26.5	42	48	53	59	59	80	80
	1000 V	kVA	–	–	–	–	–	–	–	–	–	–	–	85	95	100	100

(1) Maximum operational power corresponding to a current peak at switch-on of 30 In.

Contactor rating			LC1 G115	LC1 G150	LC1 G185	LC1 G225	LC1 G265	LC1 G330	LC1 G400	LC1 G500	LC1 G630	LC1 G630	LC1 G800
Maximum permissible current peak at switch-on		A	1800	2000	2900	3300	3800	5000	6300	7700	9000	11000	12000
Maximum operational power [2]	220 V 240 V	kVA	25	25	40	45	50	65	75	100	120	145	175
	380 V 400 V	kVA	50	50	75	80	90	120	130	170	200	245	280
	415 V 440 V	kVA	55	55	80	90	100	130	140	190	220	270	310
	500 V	kVA	65	65	95	100	110	140	170	225	260	315	350
	660 V 690 V	kVA	80	80	120	130	140	170	200	270	350	425	400
	1000 V	kVA	100	100	150	170	200	225	250	375	470	550	650

(2) Maximum operational power corresponding to a current peak at switch-on of 30 In.

Standard contactors

Capacitors, together with the circuits to which they are connected, form oscillatory circuits which can, at the moment of switch-on, give rise to high transient currents (> 180 In) at high frequencies (1 to 15 kHz).
As a general rule, the peak current on energisation is lower when:

- the mains inductances are high
- the line transformer ratings are low
- the transformer short-circuit voltage is high
- the ratio between the sum of the ratings of the capacitors already switched into the circuit and that of the capacitor to be switched in is small (for multiple step capacitor banks).

In accordance with standards IEC 60070, NF C 54-100, VDE 0560, the switching contactor must be able to withstand a continuous current of 1.43 times the rated current of the capacitor bank step being switched. The rated operational powers given in the tables below take this overload into account. Short-circuit protection is normally provided by gI type HPC fuses rated at 1.7 to 2 In.

Contactor applications

Operating conditions

Capacitors are directly switched. **The values of peak current at switch-on must not exceed the values indicated opposite.**
An inductor may be inserted in each of the three phases supplying the capacitors to reduce the peak current, if necessary. Inductance values are determined according to the selected operating temperature.

Power factor correction by a single-step capacitor bank

The use of a choke inductor is unnecessary: the inductance of the mains supply is adequate to limit the peak to a value compatible with the contactor characteristics.

Power factor correction by a multiple-step capacitor bank

Select a special contactor as defined on page B8/35.
If a standard contactor is used, it is essential to insert a choke inductor in each of the three phases of each step.

Maximum operational power of contactors

Standard contactors

Maximum operating rate: 120 operating cycles/hour.
Electrical durability at maximum load: 100 000 operating cycles.
With choke inductors connected, where necessary.

Operational power at 50/60 Hz						Max. peak current	Contactor rating
θ ≤ 40 °C [1]			θ ≤ 55 °C [1]				
220/240 V	400/440 V	600/690 V	220/240 V	400/440 V	600/690 V		
kvAR	kvAR	kvAR	kvAR	kvAR	kvAR	A	
6	11	15	6	11	15	560	**LC1D09, D12**
9	15	20	9	15	20	850	**LC1D18**
11	20	25	11	20	25	1600	**LC1D25**
14	25	30	14	25	30	1900	**LC1D32, D38**
17	30	37	17	30	37	2160	**LC1D40**
22	40	50	22	40	50	2160	**LC1D50**
22	40	50	22	40	50	3040	**LC1D65**
35	60	75	35	60	75	3040	**LC1D80, D95**
50	90	125	38	75	80	3100	**LC1D115**
60	110	135	40	85	90	3300	**LC1D150**

(1) Upper limit of temperature category conforming to IEC 60070.

Operational power at 50/60 Hz						Max. peak current	Contactor rating
θ ≤ 40 °C [2]			θ ≤ 60 °C [2]				
220/240 V	400/440 V	600/690 V	220/240 V	400/440 V	600/690 V		
kvAR	kvAR	kvAR	kvAR	kvAR	kvAR	A	
50	90	150	45	80	135	1900	**LC1G115**
55	100	165	50	90	150	2480	**LC1G150**
60	110	185	55	100	165	3050	**LC1G185**
65	120	200	60	110	180	3710	**LC1G225**
75	140	235	70	125	210	4370	**LC1G265**
85	160	265	80	145	240	5450	**LC1G330**
110	200	335	100	185	305	6600	**LC1G400**
140	255	425	120	220	365	8250	**LC1G500**
210	385	640	160	295	485	10400	**LC1G630**
210	385	640	160	295	485	13200	**LC1G800**

(2) Upper limit of temperature category conforming to IEC 60831-1.

Recommended wiring scheme, operation, curves
Coordination and standards

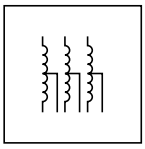

Applications

Auto-transformer starting is suitable for starting all types of squirrel cage motors: with 3, 6 or even 9 terminals according to North American technology.
Starting is performed at reduced voltage and produces maximum torque at minimum line current.
It allows the starting torque ($C = f(U)^2$) to be adapted to the resistive torque of the driven machine by means of the 2 or 3 intermediate voltage take-off connections on the auto-transformer (0.65 and 0.8 Un or 0.5, 0.65 and 0.8 Un). In general, only one take-off connection is used.
This type of starting is used for high power and/or high inertia machines.
The motor is never disconnected from its power supply during starting (closed transition) and transient phenomena are eliminated.

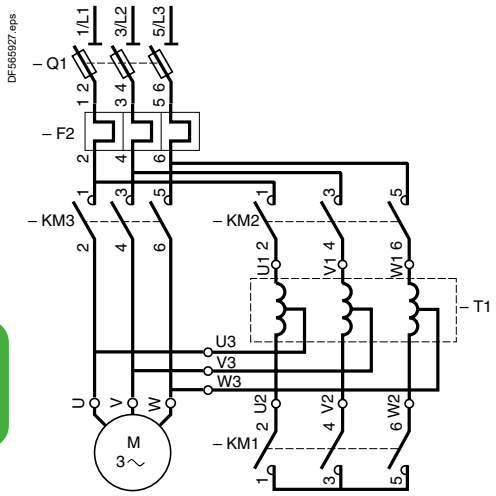

Recommended wiring scheme

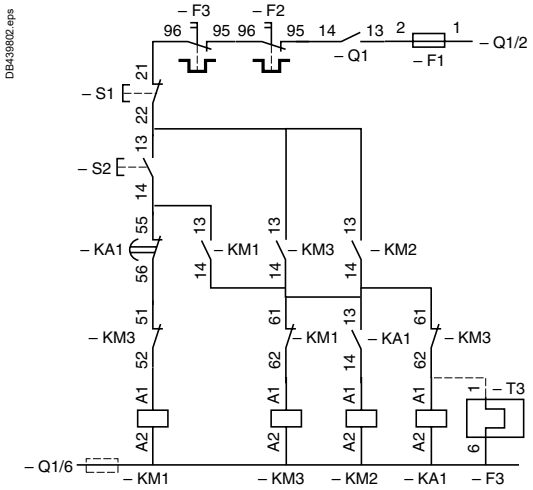

Operation

Starting is performed in 3 stages:
- star connection of the auto-transformer is made by KM1, then contactor KM2 closes and the motor starts under reduced voltage
- the neutral point is opened by KM1; part of the auto-transformer winding is switched into each phase for a short moment, constituting a stator starting inductance
- KM3 switches the motor to full mains voltage and causes the auto-transformer to be shunted out of circuit by KM2.

The auto-transformer used generally has an air gap (adjusted or not) in order to obtain, during the second phase of starting, a series inductance whose value is compatible with correct starting.

Operating curves

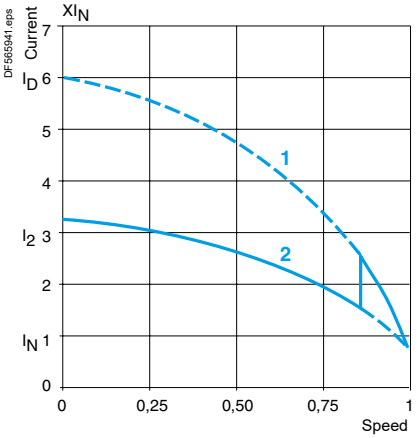

1 Direct switching current
2 Current with auto-transformer

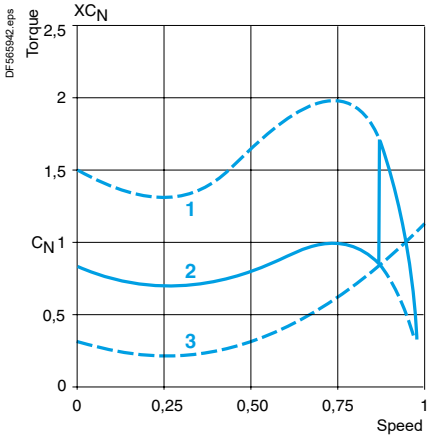

1 Direct motor torque
2 Torque with auto-transformer
3 Resistive torque of the machine

Life Is On Schneider Electric

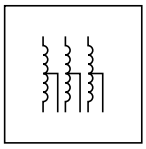

Auto-transformer starters from 59 to 900 kW up to 440 V (type 1 coordination)

The components recommended in the table below have been determined according to the following characteristics:
- auto-transformer: on 0.65 Un connection with non adjusted air gap
- 3 starts per hour, of which 2 consecutive
- motor starting current: Id/In = 6
- Iq = 70 kA
- transient current on closing of KM3 ⩽ 7 $\sqrt{2}$ In
- maximum starting time: 30 seconds
- ambient temperature θ ⩽ 40 °C.

Switch-disconnector-fuses: operators and accessories, please consult your Regional Sales Office.
Contactors: 3-pole.
LC1D: see pages B8/23 and B8/24.
LC1G: see pages B9/10 to B9/13.

Auxiliary contact blocks:
- for contactors LC1D: one LADN11 (1 N/O + 1 N/C) on KM1.

Thermal overload relays:
- LR9D: see page B11/10.
- LR9G: see pages B11/13 and B11/14.

Standard power ratings of 3-phase motors 50/60 Hz in category AC-3					Switch-disconnector -fuse Reference	aM fuse		Contactors			Overload relays	
						Size	Rating	KM3 LC1	KM2 LC1	KM1 LC1	Reference	Setting range
220/230 V kW	380/400 V kW	415 V kW	440 V kW	In max A			A					A
30	55	59	59	105	**GS•K**	22 x 58	125	G115	G115	D3210	LR9G115	28…115
40	75	80	80	138	**GS•L**	T0	160	G115	G115	D5011	LR9G225	56…225
51	90	90	100	170	**GS•N**	T1	200	G115	G115	D6511	LR9G225	56…225
63	110	110	110	205	**GS•N**	T1	250	G150	G150	D8011	LR9G225	56…225
75	132	132	150	245	**GS•N**	T1	250	G150	G150	D9511	LR9G500	125…500
90	160	160	185	300	**GS•QQ**	T2	315	G185	G185	G115	LR9G500	125…500
110	200	200	220	370	**GS•QQ**	T2	400	G225	G225	G115	LR9G500	125…500
140	250	257	280	460	**GS2S**	T3	500	G265	G265	G150	LR9G500	125…500
180	315	355	375	584	**GS2S**	T3	630	G400	G400	G185	LR9G630	157…630
200	355	375	400	635	**GS2V**	T4	800	G400	G400	G225	LR9G630	157…630
220	400	425	450	710	**GS2V**	T4	800	G500	G500	G265	LR9G630	157…630
250	450	475	500	800	**GS2V**	T4	800	G500	G500	G265	LR9G630	157…630

Applications

These contactors are used to eliminate starting resistance in the rotor circuit of slip-ring motors.

The most common application is for starters without inching and without rotor speed adjustment: pumps, fans, conveyors, compressors, ...

In the case of control by means of a manually operated master controller, the use of contactors with magnetic blow-out is recommended. Please consult your Regional Sales Office.

For hoisting applications, contactor selection must take into account the type of motor duty, the operating rate, the rotor voltage and current, the type of connection, the ambient temperature, etc.
Please consult your Regional Sales Office.

Operation

The rotor circuit contactors are interlocked with the stator contactor and therefore do not open until after the stator contactor has opened, when the rotor voltage has disappeared, or virtually disappeared.

They make the current corresponding to the normal starting peak (1.5 to 2.5 times the rated rotor current) and open the circuit under no-load. Making and breaking are easy.

Different types of rotor connection

Star connection

810882.eps

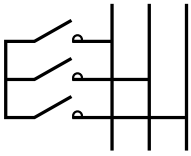

Delta connection

810883.eps

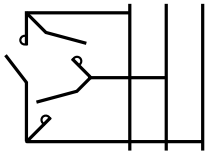

'V' connection

810884.eps

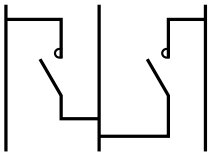

'W' connection

810885.eps

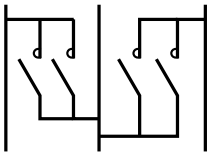

Life Is On Schneider Electric

Contactor selection according to the type of connection

Rotor current and voltage coefficients

Coefficients to be applied to the operational current values shown in the table below.

Type of connection	Rotor I coefficient	3-phase rotor Ue [1]	
		Maximum	With counter-current
	Operational I	LC1G	LC1G
Star	1	2000 V	1000 V
Delta	1.4	1700 V	850 V
In V	1	1700 V	850 V
In W	1.6	1700 V	850 V

Selection according to the operational current

The selection examples below take into account:

- a ratio of 2 between the maximum operational rotor voltage (Uer) and the rated stator operational voltage (Ues). This ratio is given in standard IEC 60947-4,
- a guarantee of occasional duty (making and breaking capacities) specified in the above standards.

Time current flowing	Contactor rating LC1 G150	LC1 G185	LC1 G265	LC1 G400	LC1 G500	LC1 G630	LC1 G800
Intermediate contactor: with number of operating cycles ≤ 30/h							
10 s	450 A	550 A	800 A	1100 A	1500 A	2000 A	2500 A
30 s	280 A	400 A	550 A	730 A	1000 A	1500 A	2000 A
60 s	220 A	300 A	400 A	550 A	750 A	1200 A	1500 A
Intermediate contactor: with number of operating cycles ≤ 60/h							
5 s	450 A	550 A	800 A	1100 A	1500 A	2000 A	2500 A
10 s	330 A	450 A	620 A	860 A	1250 A	1800 A	2300 A
30 s	220 A	300 A	400 A	550 A	750 A	1200 A	1500 A
Intermediate contactor: with number of operating cycles ≤ 150/h							
5 s	300 A	420 A	580 A	820 A	1150 A	1650 A	2200 A
10 s	250 A	350 A	430 A	600 A	850 A	1300 A	1600 A
Rotor short-circuit contactor and intermediate contactor: with number of operating cycles > 150/h							
–	200 A	270 A	350 A	500 A	700 A	1000 A	1600 A

Electrical durability

For automatic starting, the electrical durability is in the region of 1 million operating cycles.

(1) For use up to 3000 V, please consult your Regional Sales Office.

Voltage drop caused by the inrush current

When the operating coil of a contactor is energised, the inrush current produces a voltage drop in the control circuit cable caused by the resistance of the conductors, which can adversely affect closing of the contactor.
An excessive voltage drop in the control supply cables (both a.c. and d.c.) can lead to non closure of the contactor poles or even destruction of the coil due to overheating.
This phenomenon is aggravated by:
- a long line
- a low control circuit voltage
- a cable with a small c.s.a.
- a high inrush power drawn by the coil.

The maximum length of cable, depending on the control voltage, the inrush power and the conductor c.s.a., is indicated in the graphs below.

Remedial action

To reduce the voltage drop at switch-on:
- increase the conductor c.s.a.
- use a higher control circuit voltage
- use an intermediate control relay.

Selection of conductor c.s.a.

These graphs are for a maximum line voltage drop of 5 %. They give a direct indication of the copper conductor c.s.a. to be used for the control cable, depending on its length, the inrush power drawn by the contactor coil and the control circuit voltage (see example page A5/127).

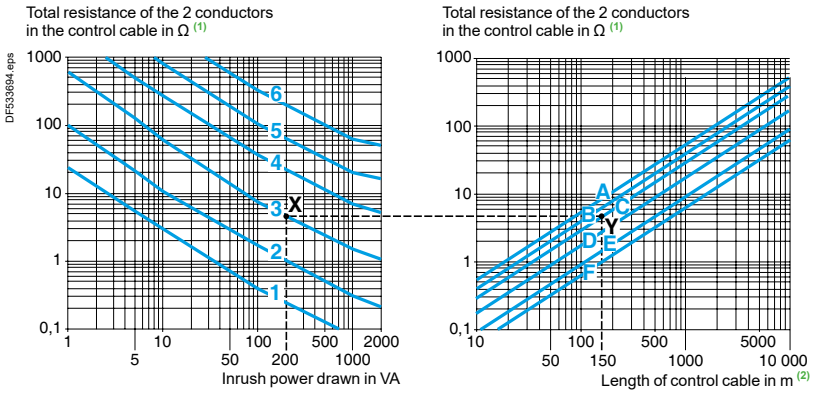

1 ∼ 24 V	3 ∼ 115 V	5 ∼ 400 V

C.s.a. of copper cables		
A 0.75 mm²	C 1.5 mm²	E 4 mm²

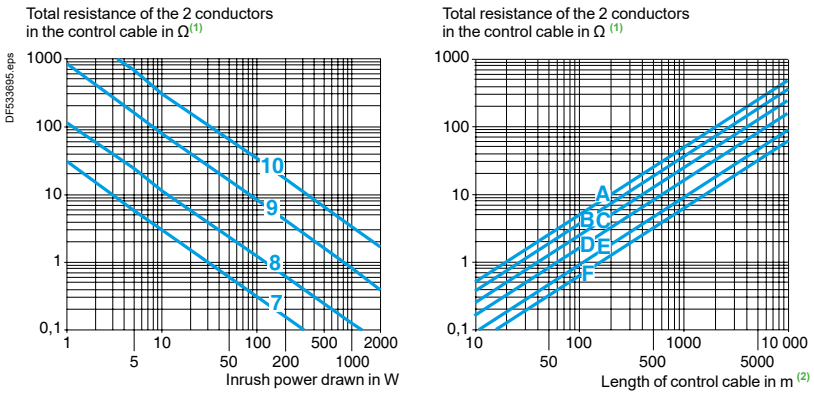

2 ∼ 48 V	4 ∼ 230 V	6 ∼ 690 V

B 1 mm²	D 2.5 mm²	F 6 mm²

7 ⎓ 24 V	9 ⎓ 125 V
8 ⎓ 48 V	10 ⎓ 250 V

C.s.a. of copper cables		
A 0.75 mm²	C 1.5 mm²	E 4 mm²
B 1 mm²	D 2.5 mm²	F 6 mm²

(1) For 3-wire control, the current only flows in 2 of the conductors.
(2) This is the length of the cable comprising 2 or 3 conductors. (Distance between the contactor and the control device).

Life Is On Schneider Electric

Voltage drop caused by the inrush current

What cable c.s.a. is required for the control circuit of an LC1 D40A, 115 V contactor, operated from a distance of 150 metres?

■ Contactor LC1D40A, voltage 115 V, 50 Hz: inrush power: 200 VA.

On the left-hand graph on the page opposite, point X is at the intersection of the vertical line corresponding to 200 VA and the ∿ 115 V voltage curve.

On the right-hand graph on the page opposite, point Y is at the intersection of the vertical line corresponding to 150 m and the horizontal line passing through point X.

Use the conductor c.s.a. indicated by the curve which passes through point Y, i.e.: 1.5 mm^2.

If point Y lies between two c.s.a. curves, choose the larger of the c.s.a. values.

Calculating the maximum cable length

The maximum permissible length for acceptable line voltage drop is calculated by the formula:

$$L = \frac{U^2}{SA} .s.K$$

where:

L : distance between the contactor and the control device in m (length of the cable)
U : supply voltage in V
SA : apparent inrush power drawn by the coil in VA
s : conductor c.s.a. in mm^2
K : factor given in the table below.

a.c. supply	**SA in VA**	**20**	**40**	**100**	**150**	**200**
	K	1.38	1.5	1.8	2	2.15

d.c. supply	Irrespective of the apparent inrush power SA, expressed in W
	K = 1.38

Residual current in the coil due to cable capacitance

When the control contact of a contactor is opened, the control cable capacitance is effectively in series with the coil of the electromagnet. This capacitance can cause a residual current to be maintained in the coil, with the risk that the contactor will remain closed.

This only applies to contactors operating on an a.c. supply.

This phenomenon is aggravated by:
- a long line length between the coil control contact and the contactor, or between the coil control contact and the power supply,
- a high control circuit voltage,
- a low coil consumption, sealed,
- a low value of contactor drop-out voltage.

The maximum control cable length, according to the contactor coil supply voltage, is indicated in the graph on the page opposite.

Remedial action

Various solutions can be adopted to avoid the risk of the contactor remaining closed due to cable capacitance:
- use a d.c. control voltage, or
- add a rectifier, connected as shown in the scheme below, but retaining an a.c. operating coil: in this way, rectified a.c. current flows in the control cable.

When calculating the maximum cable length, take the resistance of the conductors into account.

.

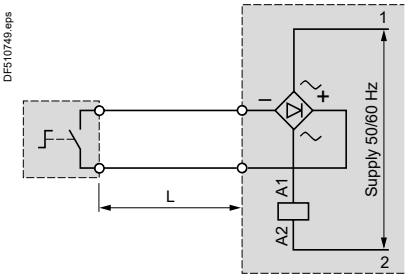

- Connect a resistor in parallel with the contactor coil [(1)].

Value of the resistance:

$$R\,\Omega = \frac{1}{10^{-3}\,C\,(\mu F)} \quad \text{(C capacitance of the control cable)}$$

Power to be dissipated:

$$PW = \frac{U^2}{R}$$

(1) To avoid increasing the voltage drop due to inrush current, this resistor must be brought into operation after the contactor has closed by using an N/O contact.

Life Is On Schneider Electric

Residual current in the coil due to cable capacitance

These graphs are for a capacitance, between 2 conductors, of 0.2 µF/km. They make it possible to determine whether there is a risk of the contactor remaining closed due to the power drawn by the coil when sealed, as well as the control circuit voltage, according to the length of the control cable.

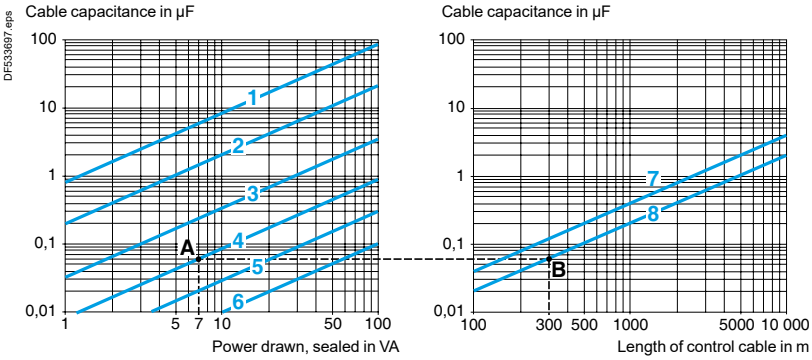

1	∼ 24 V	3	∼ 115 V	5	∼ 400 V	7	3-wire control
2	∼ 48 V	4	∼ 230 V	6	∼ 690 V	8	2-wire control

In the zones below the straight lines for 3-wire and 2-wire control respectively, there is a risk of the contactor remaining closed.

Examples

What is the maximum length for the control cable of an LC1D12 contactor, operating on 230 V, with 2-wire control?

■ Contactor LC1D12, voltage 230 V, 50 Hz: power sealed 7 VA.

On the left-hand graph, point A is at the intersection of the vertical line for 7 VA with the ∼ 230 V voltage curve.

On the right-hand graph, point B is at the intersection of the horizontal line with the 2-wire control curve.

The maximum cable length is therefore 300 m.

In the same example, with a 600 m cable, the point lies in the risk zone. A resistor must therefore be connected in parallel with the contactor coil.

$$R = \frac{1}{10^{-3} \cdot C} = \frac{1}{10^{-3} \cdot 0.12} = 8.3\ \Omega$$

Value of this resistance:

$$P = \frac{U^2}{R} = \frac{(220)^2}{8300} = 6\ W$$

Power to be dissipated:

Alternative solution: use a d.c. control supply.

Calculating the cable length

The maximum permitted length of control cable to avoid the effects of capacitance is calculated using the formula:

$$L = 455 \cdot \frac{S}{U^2 . Co}$$

L : distance between the contactor and the control device in km (length of the cable),
S : apparent power, sealed, in VA,
U : control voltage in V,
Co : line capacitance of the cable in µF/km.

3-phase 4-pole motors

Current values for power in kW

Rated operational power (1)	Indicative rated operational current values at: 230 V	400 V	500 V	690 V
kW	A			
0.06	0.35	0.2	0.16	0.12
0.09	0.52	0.3	0.24	0.17
0.12	0.7	0.44	0.32	0.23
0.18	1	0.6	0.48	0.35
0.25	1.5	0.85	0.68	0.49
0.37	1.9	1.1	0.88	0.64
0.55	2.6	1.5	1.2	0.87
0.75	3.3	1.9	1.5	1.1
1.1	4.7	2.7	2.2	1.6
1.5	6.3	3.6	2.9	2.1
2.2	8.5	4.9	3.9	2.8
3	11.3	6.5	5.2	3.8
4	15	8.5	6.8	4.9
5.5	20	11.5	9.2	6.7
7.5	27	15.5	12.4	8.9
11	38	22	17.6	12.8
15	51	29	23	17
18.5	61	35	28	21
22	72	41	33	24
30	96	55	44	32
37	115	66	53	39
45	140	80	64	47
55	169	97	78	57
75	230	132	106	77
90	278	160	128	93
110	340	195	156	113
132	400	230	184	134
160	487	280	224	162
200	609	350	280	203
250	748	430	344	250
315	940	540	432	313
355	1061	610	488	354
400	1200	690	552	400
500	1478	850	680	493
560	1652	950	760	551
630	1844	1060	848	615
710	2070	1190	952	690
800	2340	1346	1076	780
900	2640	1518	1214	880
1000	2910	1673	1339	970

(1) Values conforming to standard IEC 60072-1 (at 50 Hz).
(2) Values conforming to standard UL 508 (at 60 Hz).

Current values for power in hp

Rated operational power (2)	Indicative rated operational current values at: 110 - 120 V	200 V	208 V	220 - 240 V	380 - 415 V	440 - 480 V	550 - 600 V
hp	A						
1/2	4.4	2.5	2.4	2.2	1.3	1.1	0.9
3/4	6.4	3.7	3.5	3.2	1.8	1.6	1.3
1	8.4	4.8	4.6	4.2	2.3	2.1	1.7
1 1/2	12	6.9	6.6	6	3.3	3	2.4
2	13.6	7.8	7.5	6.8	4.3	3.4	2.7
3	19.2	11	10.6	9.6	6.1	4.8	3.9
5	30.4	17.5	16.7	15.2	9.7	7.6	6.1
7 1/2	44	25.3	24.2	22	14	11	9
10	56	32.2	30.8	28	18	14	11
15	84	48.3	46.2	42	27	21	17
20	108	62.1	59.4	54	34	27	22
25	136	78.2	74.8	68	44	34	27
30	160	92	88	80	51	40	32
40	208	120	114	104	66	52	41
50	260	150	143	130	83	65	52
60	-	177	169	154	103	77	62
75	-	221	211	192	128	96	77
100	-	285	273	248	165	124	99
125	-	359	343	312	208	156	125
150	-	414	396	360	240	180	144
200	-	552	528	480	320	240	192
250	-	-	-	604	403	302	242
300	-	-	-	722	482	361	289
350	-	-	-	828	560	414	336
400	-	-	-	954	636	477	382
450	-	-	-	1030	–	515	412
500	-	-	-	1180	786	590	472

Note: *These values are given as a guide. They may vary depending on the type of motor, its polarity and the manufacturer.*

Standardisation

Conformity to standards

Schneider Electric products satisfy, in the majority of cases, national (for example: BS in Great Britain, NF in France, DIN in Germany), European (for example: CENELEC) or international (IEC) standards. These product standards precisely define the performance of the designated products (such as IEC 60947 series for low voltage equipment).
When used correctly, as designated by the manufacturer and in accordance with regulations and correct practices, these products will allow users to build equipment, machine systems or installations that conform to their appropriate standards (for example: IEC 60204-1, relating to electrical equipment used on industrial machines).
Schneider Electric is able to provide proof of conformity of its production to the standards it has chosen to comply with, through its quality assurance system.
On request, and depending on the situation, Schneider Electric can provide the following:
- a declaration of conformity,
- a certificate of conformity (CB certificate, Asefa/Lovag),
- a homologation certificate or approval, in the countries where this procedure is required or for particular specifications, such as those existing in the merchant navy.

Standard	Certification authority		Country
	Name	Regulation authority	
ANSI	American National Standards Institute	ANSI	USA
BS	British Standards Institution	BSI	Great Britain
CEI	Comitato Elettrotecnico Italiano	CEI	Italy
DIN/VDE	Verband Deutscher Electrotechniker	VDE	Germany
EN	Comité Européen de Normalisation Electrotechnique	CENELEC	Europe
TR Regulation	Eurasian Customs Union	EAC	Russia, Belarus, Kazakhstan
IEC	International Electrotechnical Commission	IEC	Worldwide
JIS	Japanese Industrial Standards Committee	JISC	Japan
NBN	Institut Belge de Normalisation	IBN	Belgium
NEN	Nederlands Normalisatie Institut	NNI	Netherlands
NF	Union Technique de l'Electricité	UTE	France
SAA	Standards Association of Australia	SAA	Australia
UNE	Asociacion Española de Normalizacion y Certificacion	AENOR	Spain

European EN standards

These are technical specifications established in conjunction with, and with approval of, the relative bodies within the various CENELEC member countries (European Union, European Free Trade Association and many central and eastern European countries having «member» or «affiliated» status). Prepared in accordance with the principle of consensus, the European standards are the result of a weighted majority vote. Such adopted standards are then integrated into the national collection of standards, and contradictory national standards are withdrawn.
European standards incorporated within the French collection of standards carry the prefix NF EN. At the 'Union Technique de l'Electricité' *(Technical Union of Electricity)* (UTE), the French version of a corresponding European standard carries a dual number: European reference (NF EN …) and classification index (C …).
Therefore, the standard NF EN 60947-4-1 relating to motor contactors and starters, effectively constitutes the French version of the European standard EN 60947-4-1 and carries the UTE classification C 63-110.
This standard is identical to the British standard BS EN 60947-4-1 or the German standard DIN EN 60947-4-1.
Whenever reasonably practical, European standards reflect the international standards (IEC).
With regard to automation system components and distribution equipment, in addition to complying with the requirements of French NF standards, Schneider Electric brand components conform to the standards of all other major industrial countries.

Regulations

European Directives

Opening up of European markets assumes harmonisation of the regulations pertaining to each of the member countries of the European Union.
The purpose of the European Directive is to eliminate obstacles hindering the free circulation of goods within the European Union, and it must be applied in all member countries. Member countries are obliged to transcribe each Directive into their national legislation and to simultaneously withdraw any contradictory regulations. The Directives, in particular those of a technical nature which concern us, only establish the objectives to be achieved, referred to as "essential requirements".
The manufacturer must take all the necessary measures to ensure that his products conform to the requirements of each Directive applicable to his production.
As a general rule, the manufacturer certifies conformity to the essential requirements of the Directive(s) for his product by affixing the CE marking.
The CE marking is affixed to Schneider Electric brand products concerned, in order to confirm compliance with French and European regulations.

Significance of the CE marking
- The CE marking affixed to a product signifies that the manufacturer declares that the product conforms to the relevant European Directive(s) which concern it; this condition must be met to allow free distribution and circulation within the countries of the European Union of any product subject to one or more of the E.U. Directives.
- The CE marking is intended solely for national market control authorities.
- The CE marking must not be confused with a conformity mark.

European Directives

For electrical equipment, only conformity to standards signifies that the product is suitable for its designated function, and only the guarantee of an established manufacturer can provide a high level of quality assurance.
For Schneider Electric brand products, one or several Directives are likely to be applicable, depending on the product, and in particular:

- the Low Voltage Directive 2014/35/EU: the CE marking relating to this Directive has been compulsory since April 2016.
- the Electromagnetic Compatibility Directive 2014/30/EU: the CE marking on products covered by this Directive has been compulsory since April 2016.

CB certificate, Asefa/Lovag certificate

- CB certification is issued according to IEC standards in respect to a multilateral agreement between almost industrial countries called CB scheme. It allows international certification of electrical and electronic products so that a single certification facilitates a worldwide market access.
- The function of ASEFA (Association des Stations d'Essais Française d'Appareils électriques - *Association of French Testing Stations for Low Voltage Industrial Electrical Equipment)* is to carry out tests of conformity to standards and to issue certificates of conformity and test reports. ASEFA laboratories are authorised by the French authorisation committee (COFRAC). ASEFA is now a member of the European agreement group LOVAG (Low Voltage Agreement Group). This means that any certificates issued by LOVAG/ASEFA are recognised by all the authorities which are members of the group and carry the same validity as those issued by any of the member authorities.

Quality labels

When components can be used in domestic and similar applications, it is sometimes recommended that a "Quality label" be obtained, which is a form of certification of conformity.

Code	Quality label	Country
CEBEC	Comité Electrotechnique Belge	Belgium
KEMA-KEUR	Keuring van Electrotechnische Materialen	Netherlands
NF	Union Technique de l'Electricité	France
ÖVE	Österreichischer Verband für Electrotechnik	Austria
SEMKO	Svenska Electriska Materiel Kontrollanatalten	Sweden

Product certifications

In some countries, the certification of certain electrical components is a legal requirement. In this case, a certificate of conformity to the standard is issued by the official test authority.
Each certified device must bear the relevant certification symbols when these are mandatory:

Code	Certification authority	Country
CSA	Canadian Standards Association	Canada
UL	Underwriters Laboratories	USA
CCC	China Compulsory Certification	China

Note on certifications issued by the Underwriters Laboratories (UL). There are two levels of approval:

"Recognized" ( ) The component is fully approved for inclusion in equipment built in a workshop, where the operating limits are known by the equipment manufacturer and where its use within such limits is acceptable by the Underwriters Laboratories.
The component is not approved as a "Product for general use" because its manufacturing characteristics are incomplete or its application possibilities are limited.
A "Recognized" component does not necessarily carry the certification symbol.

"Listed" (UL) The component conforms to all the requirements of the classification applicable to it and may therefore be used both as a "Product for general use" and as a component in assembled equipment. A "Listed" component must carry the certification.

Marine classification societies

Prior recognition by certain marine classification societies is generally required for electrical equipment which is intended for use on board merchant vessels.
Europe community has emitted regulation No. 391/2009 for common rules for Type approval of Marine equipment.
MR TA Mutual Recognition Type Approval is a certificate that is mutually recognized by all 12 classification societies from the **EU RO MR group** (European Recognized Organizations).
Renewal of marine certifications, or new products certification is now covered by EU-MR (Mutual Recognition) process and therefore removes the need for multiple marine certifications.
Current EU RO members include all major societies like DNV-GL, BV, ABS, LR as well as non-European societies like CCS, KR, NK, RMRS, etc.

Rules	Classification authority	Country
ABS	American Bureau of Shipping	Unites States of America
KRoS	Korean register of Shipping	South Korea
BV	Bureau Veritas	France
DNV-GL	Det Norske Veritas - Germanischer Lloyd	Norway - Germany
LRoS	Lloyd's Register of Shipping	Great Britain
NKK	Nippon Kaiji Kyokaï	Japan
RINA	Registro Italiano Navale	Italy
RMRoS	Russian Maritime Register of Shipping	Russia
CCS	China Classification Society	Republic of China

Note: for further details on a specific product, please refer to the "Characteristics" pages in this catalogue or consult your Regional Sales Office.

Degrees of protection against the penetration of solid bodies, water and personnel access to live parts

The European standard EN 60529 dated October 1991, IEC publication 529 (2nd edition - November 1989), defines a coding system (IP code) for indicating the degree of protection provided by electrical equipment enclosures against accidental direct contact with live parts and against the ingress of solid foreign objects or water. This standard does not apply to protection against the risk of explosion or conditions such as humidity, corrosive gasses, fungi or vermin.
Certain equipment is designed to be mounted on an enclosure which will contribute towards achieving the required degree of protection (example : control devices mounted on an enclosure).
Different parts of an equipment can have different degrees of protection (example : enclosure with an opening in the base).
Standard NF C 15-100 (May 1991 edition), section 512, table 51 A, provides a cross-reference between the various degrees of protection and the environmental conditions classification, relating to the selection of equipment according to external factors.
Practical guide UTE C 15-103 shows, in the form of tables, the characteristics required for electrical equipment (including minimum degrees of protection), according to the locations in which they are installed.

IP ●●● code

The IP code comprises **2 characteristic numerals** (e.g. **IP 55**) and may include **an additional letter** when the actual protection of personnel against direct contact with live parts is better than that indicated by the first numeral (e.g. IP 20C).
Any characteristic numeral which is unspecified is replaced by an X (e.g. IP XXB).

1st characteristic numeral

corresponds to protection of the equipment against penetration of solid objects and protection of personnel against direct contact with live parts.

	Protection of the equipment		Protection of personnel
0	Non-protected		Non-protected
1	Ø 50 mm	Protected against the penetration of solid objects having a diameter greater than or equal to 50 mm	Protected against direct contact with the back of the hand (accidental contacts).
2	Ø 12,5 mm 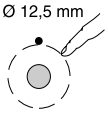	Protected against the penetration of solid objects having a diameter greater than or equal to 12.5 mm.	Protected against direct finger contact.
3	Ø 2,5 mm 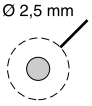	Protected against the penetration of solid objects having a diameter greater than or equal to 2.5 mm.	Protected against direct contact with a Ø2.5 mm tool.
4	Ø 1 mm 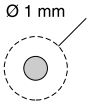	Protected against the penetration of solid objects having a diameter greater than or equal to 1 mm.	Protected against direct contact with a Ø1 mm wire.
5	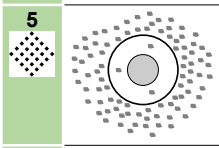	Dust protected (no harmful deposits).	Protected against direct contact with a Ø1 mm wire.
6	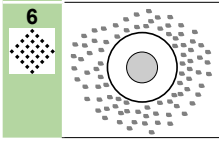	Dust tight.	Protected against direct contact with a Ø1 mm wire.

2nd characteristic numeral

corresponds to protection of the equipment against penetration of water with harmful effects.

0	Non-protected	
1		Protected against vertical dripping water, (condensation).
2	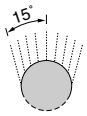	Protected against dripping water at an angle of up to 15°.
3	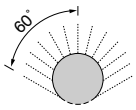	Protected against rain at an angle of up to 60°.
4	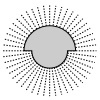	Protected against splashing water in all directions.
5	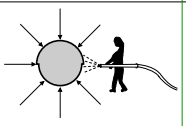	Protected against water jets in all directions.
6	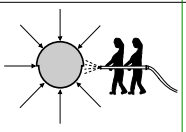	Protected against powerful jets of water and waves.
7	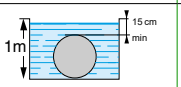	Protected against the effects of temporary immersion.
8	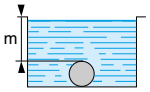	Protected against the effects of prolonged immersion under specified conditions.

Additional letter

corresponds to protection of personnel against direct contact with live parts.

A	With the back of the hand.
B	With the finger.
C	With a Ø2.5 mm tool.
D	With a Ø1 mm wire.

Degrees of protection against mechanical impact

The European standard EN 50102 dated March 1995 defines a coding system (IK code) for indicating the degree of protection provided by electrical equipment enclosures against external mechanical impact.
Standard NF C 15-100 (May 1991 edition), section 512, table 51 A, provides a cross-reference between the various degrees of protection and the environmental conditions classification, relating to the selection of equipment according to external factors.
Practical guide UTE C 15-103 shows, in the form of tables, the characteristics required for electrical equipment (including minimum degrees of protection), according to the locations in which they are installed.

IK ●● code

The IK code comprises **2 characteristic numerals** (e.g. **IK 05**).

2 characteristic numerals

corresponding to a value of impact energy.

		h (cm)	Energy (J)
00	Non-protected		
01	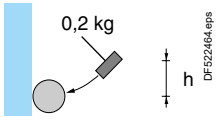	7.5	0.15
02		10	0.2
03		17.5	0.35
04		25	0.5
05		35	0.7
06	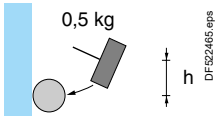	20	1
07		40	2
08	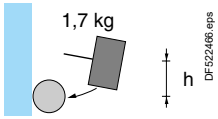	30	5
09	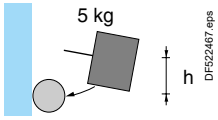	20	10
10		40	20

Life Is On Schneider Electric

Part B

COMPONENTS
FOR CONVENTIONAL SOLUTIONS

Linergy BZ, HK
Busbar systems — Up to 630 A — B1/1 — Power busbar systems

GV, LAD, U
Wiring systems for motor starters — B2/1 — Wiring systems

TeSys Control
Switch-disconnectors — Up to 175 A — B3/1 — Switch-disconnectors

TeSys Power
Fuse carriers — Up to 125 A — B4/1 — Fuse carriers

TeSys Power
Switch-disconnector fuses — Up to 1250 A — B5/1 — Switch-disconnector fuses

TeSys Power
Deca, Giga and Modular
Motor circuit breakers — Up to 250 kW — B6/1 — Motor circuit breakers

TeSys Control
SK, K, Deca Control relays — Up to 10 A — B7/1 — Control relays

TeSys Control
SK, K, SKGC, Deca, Modular and other Contactors — Up to 150 A (AC-3) — B8/1 — Contactors

TeSys Control
Giga High power contactors — Up to 800 A (AC-3) — B9/1 — High power contactors

TeSys Control
F High power contactors — Up to 2600 A (AC-1) — B10/1 — High power contactors

TeSys Protect
LRK, Deca, Giga
Overload relays — Up to 630 A — B11/1 — Overload relays

This PDF Catalog is updated twice a year. Please check on the link below that you are using the last version.

Ref. MKTED210011EN

Life Is On | Schneider Electric

Linergy BZ, HK Busbar systems

Busbar systems for electrical distribution and motors starters

Type of product	Range		Pages
Introduction Linergy BZ			B1/2
Multi-standard power busbar Linergy BZ	From 160 to 630 A	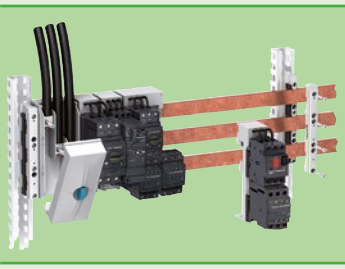	B1/4
Introduction Linergy HK			B1/10
Multi-standard hot-plug distribution system Linergy HK	Up to 160 A	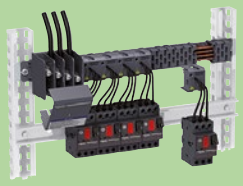	B1/12

Technical Data for Designers B1/17

All Schneider Electric **distribution and connection systems** are brought together into a single brand name: **Linergy**

Distribution blocks
Device feeders
Power busbars
Hot plug busbar system
Terminal blocks and bars.

Catalogue reference: **LVYED213001EN**

In enclosures, when space saving and fast connection are a strong requirement

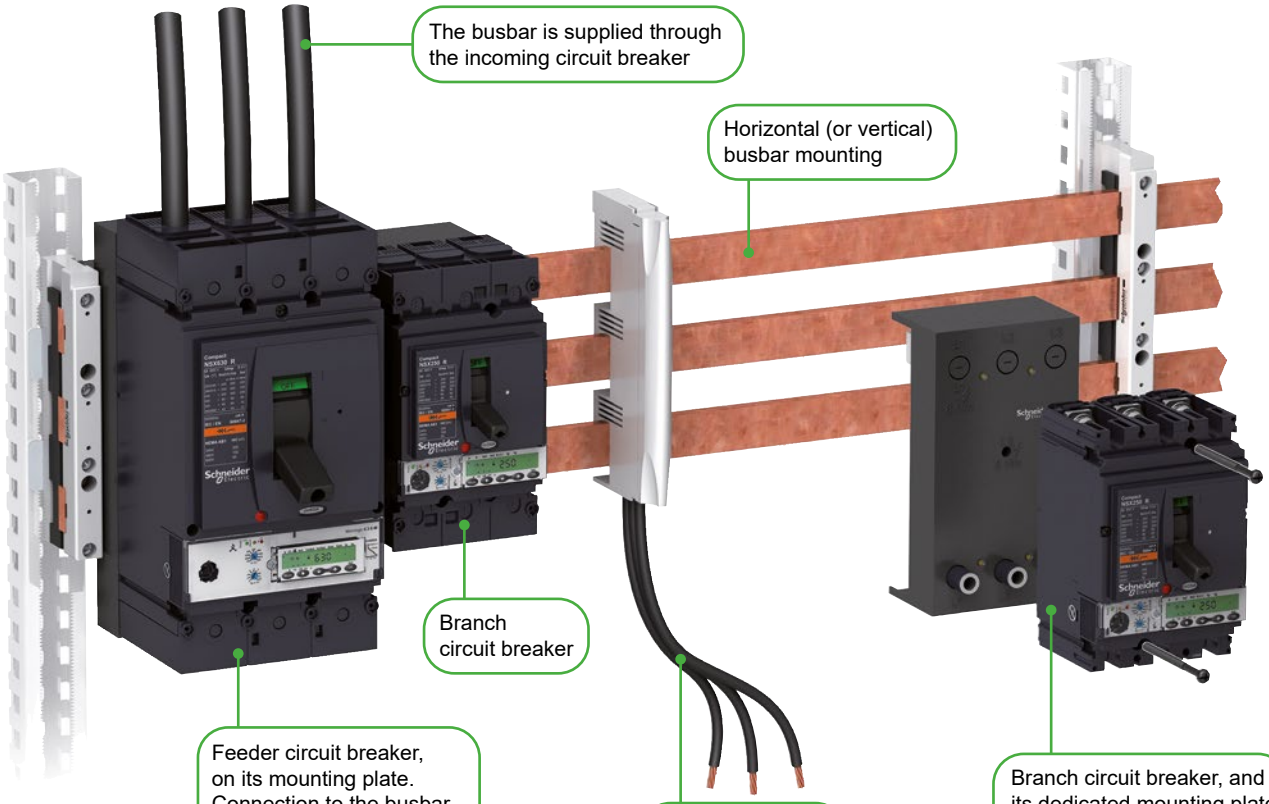

Ideal for industrial process application

Advantages

- Considerable space saving: components are directly mounted on the busbar
- Quick connection, deconnection: a metal hook combines mechanical fastening and electrical connection
- Multi standard: conform to IEC and UL standards

Detailed view: back face of a mounting plate

- Mounting plates, for Compact NSX, Powerpact and GV5 circuit breakers
- Compatible with bars:
  - Height 12, 15, 20, 25 or 30 mm,
  - Width 5 or 10 mm

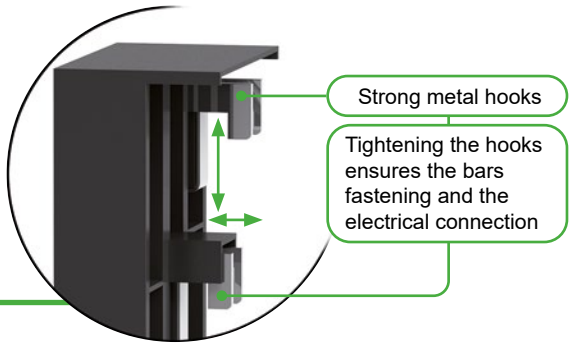

Introduction

In control switchboards, when space saving, quick mounting and replacement are required

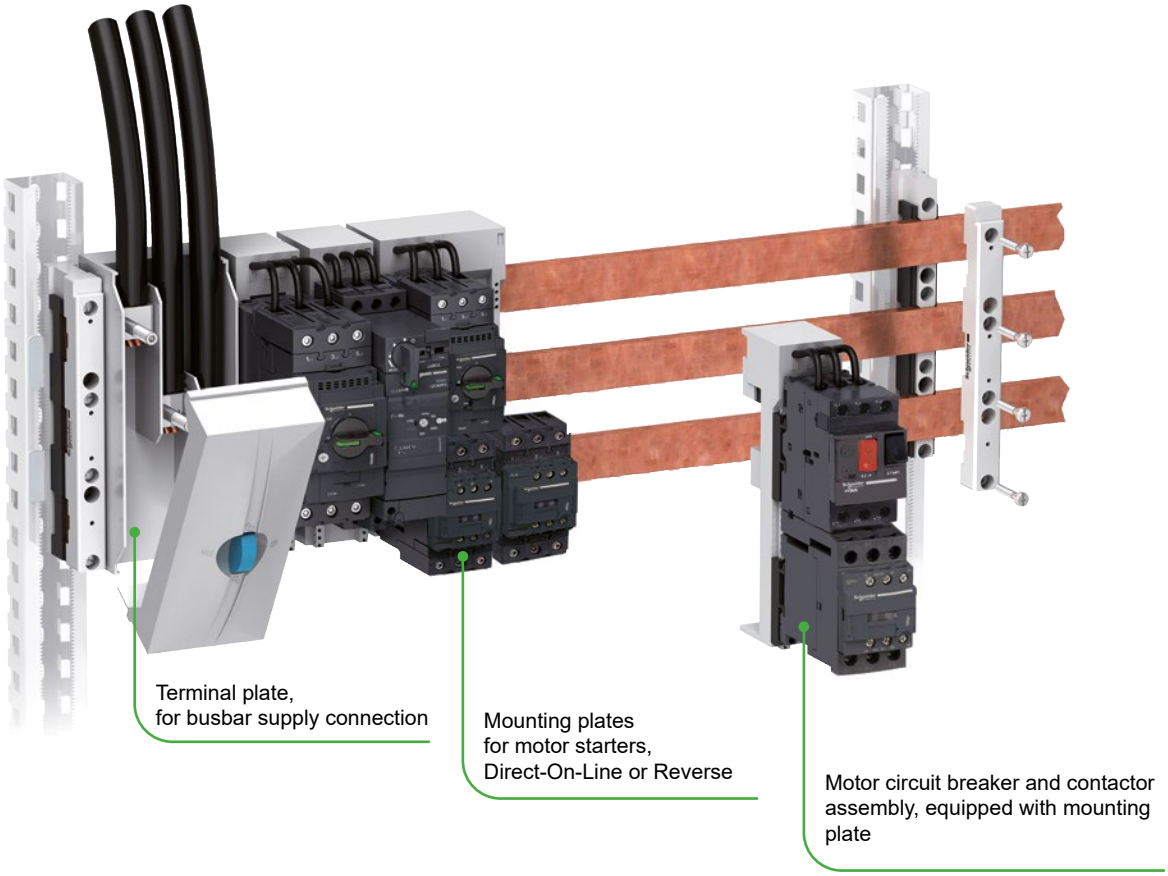

Advantages

- Considerable space saving: components are directly mounted on the busbar
- Large choice of mounting plates (for a Deca Frame 2 (GV2) , a Deca Frame 3 (GV3) motor circuit breakers and assemblies, a Deca Frame 5 (GV5) Ultra)
- Quick connection, deconnection (power off): clip-on mounting plates
- Vibration resistant busbar connections: no periodical re-tightening required
- Multi standard: conform to IEC and UL standards

Detailed view: back face of a motor starter mounting plate

- A reliable electrical contact is ensured by copper blades
- The blue part locks the mounting plate on the busbar, compatibility is provided with the standard profiles:
  - Height 12, 15, 20, 25 or 30 mm,
  - Width 5 or 10 mm

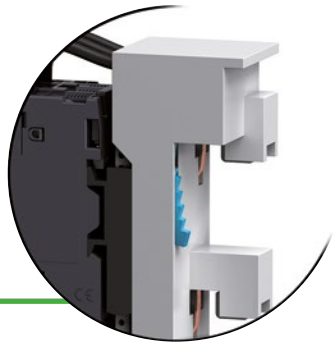

DB400244.eps

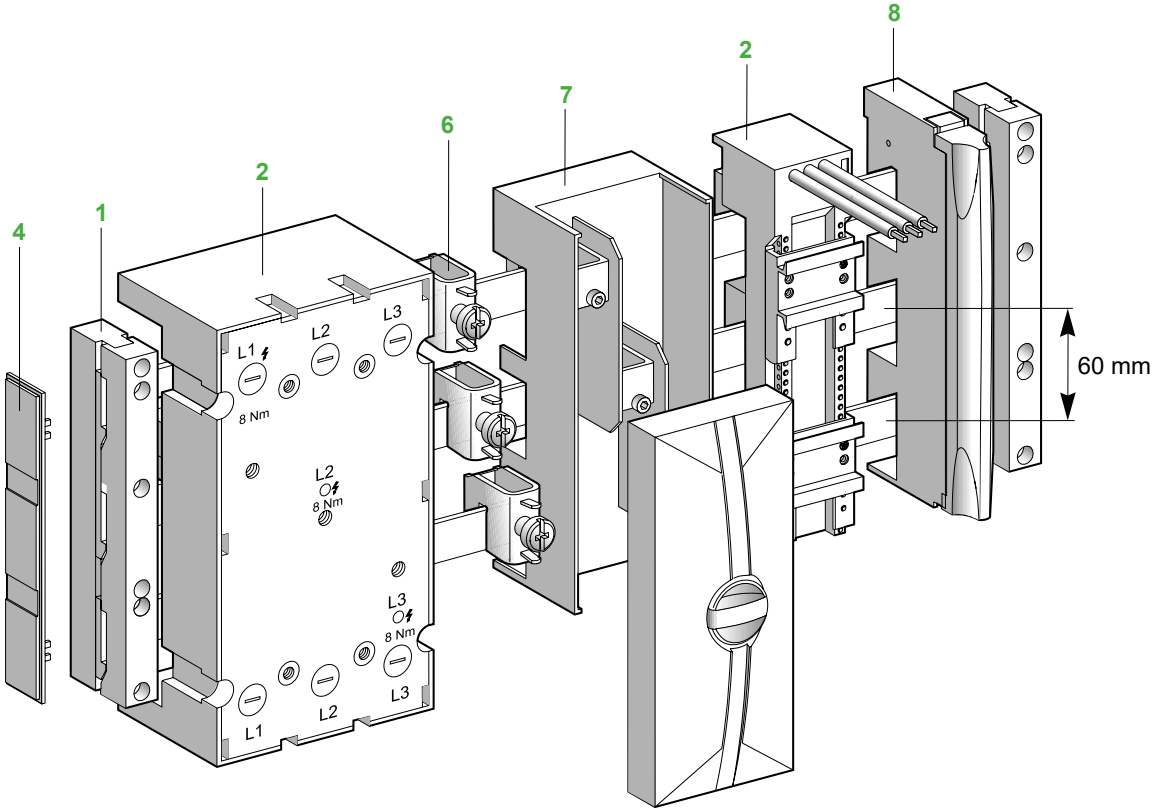

DB400245.eps

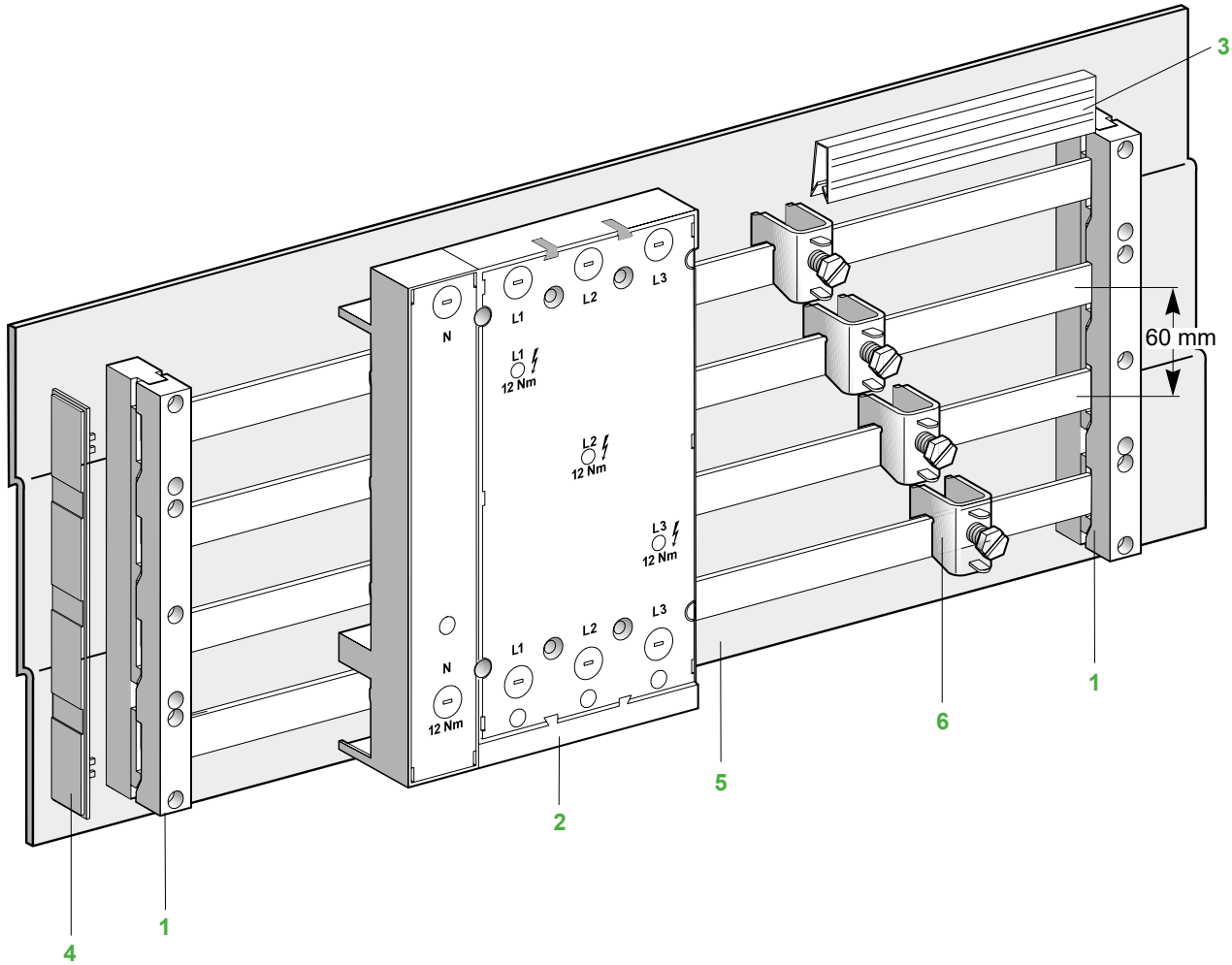

Life Is On Schneider Electric

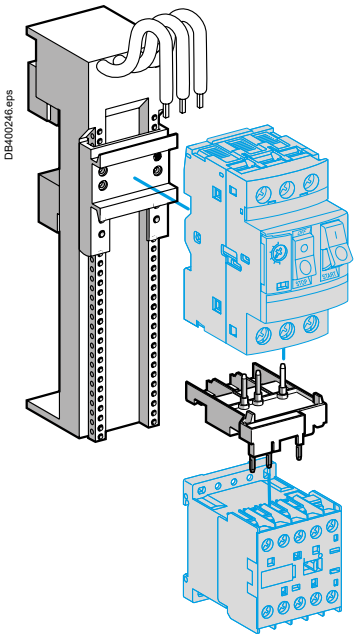

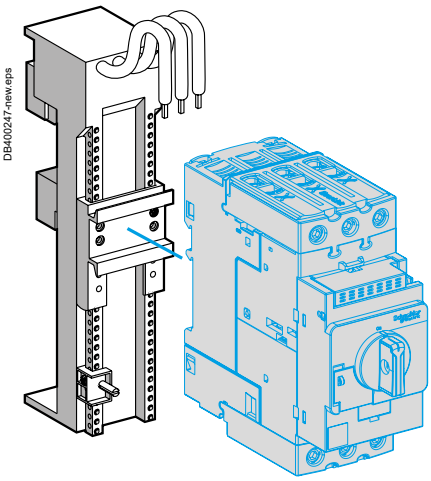

Installation examples.

Description

The mounting plate system for busbars simplifies the installation of motor feeder components used in your electrical installations.
Power distribution is performed by a busbar.

The mounting plates are fitted directly on this busbar, by snap-on mounting, thus implementing mechanical and electrical connection.

This system offers numerous benefits:
- space saving in cabinets
- fast, safe and reliable electrical and mechanical connection
- easy connection
- protection for users against electric shocks by direct contacts (IP20) by using busbars end covers
- equipment flexibility and modularity
- increased equipment availability: easier maintenance
- power supply without drilling (connectors) from 1.5 to 120 mm².

Busbars system
The busbar interaxis is 60 mm. Depending on the cross section of the bars, the busbar can withstand a maximum current of 630 A.

Note: *The bars forming the busbar are not part of the LA9Z offer. They are not supplied by us. Their selection depends on the maximum current needed for your installation (see next page).*

Support for 3P and 4P busbar (1)
These are available in 2 versions: three-pole and four-pole.
For applications having to comply with the UL standard, use the LA9ZX01508 support (3P only).

The mounting plates (2)
These allow mounting of the power feeder components consisting of:
- a Deca Frame 2 (GV2) motor circuit breaker, mounted alone or in conjunction with a TeSys K or Deca contactor
- a Deca Frame 3 (GV3) motor circuit breaker, mounted alone or in conjunction with a Deca contactor
- a Ultra motor starter
- a Deca Frame 5 (GV5) motor circuit breaker
- a NSX100-250 or NSX400-630 A circuit breaker
- H/J/L PowerPact circuit breaker frame.

Accessories
Accessories complete the offer:
- covers (3) for 5 and 10 mm bars
- end covers (4)
- a base plate (5)
- 1P connectors (6)
- 3P connectors on mounting plate (7)
- a spring terminal 3P connection module (8).

References:
pages B1/6 to B1/9
Characteristics:
page B1/18
Curves:
page B1/19

Product references

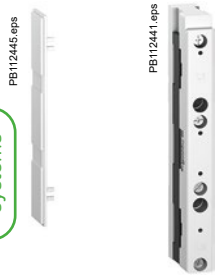

LA9ZX01573 *LA9ZX01495*

IEC busbar supports and accessories

		Min. order qty	Unit reference
3-pole	For 12, 15, 20, 25, 30 x 5/10 mm busbars	10	**LA9ZX01495**
	End covers for 3-pole busbar support	10	**LA9ZX01573**
4-pole	For 12, 15, 20, 25, 30 x 5/10 mm busbars	10	**LA9ZX01485**
	End covers for 4-pole busbar support (5 left, 5 right)	10	**LA9ZX01131**

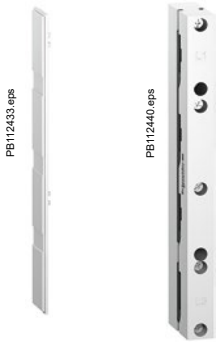

LA9ZX01131 *LA9ZX01485*

UL busbar supports and accessories

		Min. order qty	Unit reference
3-pole	For 12, 20, 30 x 5/10 mm busbars	10	**LA9ZX01508**
	Base plate 240 x 700	2	**LA9ZX01515**
	End covers for busbar support	10	**LA9ZX01573**

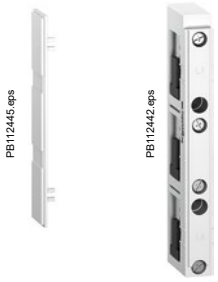

LA9ZX01573 *LA9ZX01508*

Other accessories

		Min. order qty	Unit reference
Covers, length 1 m			
	For 12-30 x 5 mm busbars	10	**LA9ZX01244**
	For 12-30 x 10 mm busbars	10	**LA9ZX01245**

LA9ZX01244

Product references

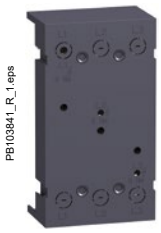

LV429372

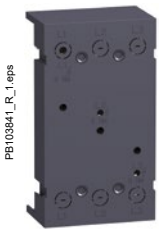

LA9ZA32600

LV432624

For Deca Frame 5 (GV5), Frame 6 (GV6) motor circuit breakers

Ratings			Mounting plate l x h x d	Min. order qty	Unit reference
150-220 A	GV5	Mounting plate for 3P circuit breakers	104 x 190 x 63	1	**LV429372**
		Mounting plate for 4P circuit breakers	139 x 251 x 63	1	**LV429373**
320-500 A	GV6	Mounting plate for 3P circuit breakers	139 x 270 x 63	1	**LV432623**
		Mounting plate for 4P circuit breakers	184 x 284 x 63	1	**LV432624**

For PowerPact 3P circuit breakers

Ratings		Mounting plate l x h x d	Min. order qty	Unit reference
60-100-150 A	Mounting plate for H frame circuit breakers	104 x 190 x 63	1	**LA9ZA32600**
250 A	Mounting plate for J frame circuit breakers	104 x 190 x 63	1	**LV429372**
250-400-600 A	Mounting plate for L frame circuit breakers	139 x 270 x 63	1	**LV432623**

Characteristics of busbar mounting plates

Type of mounting plate		LA9ZA32621 LA9ZA32622	LA9ZA32427 LA9ZA32428 LA9ZA32434 LA9ZA32623 LA9ZA32442 LA9ZA32443	LA9ZA32624 LA9ZA32625 LA9ZA32626 LA9ZA32627	LV429372 LV429373	LV432623 LV432624	LA9ZA32600
Degree of protection as per IEC 60529	IP	20					
Rated insulation voltage	V	690					
Permissible current	A	25	32	63	80-100-250	400-630	60-100-150
Peak rated current	kA	50	50 (1)	50	50	50	50
SCCR (UL) with Compact NSX circuit breaker protection	mm²	The reinforced breaking capacity due to cascading in circuit breaker combination is maintained					
Conductor cross section (color: black)	mm²	4	6	10	NA		
	AWG	12	10	8	NA		
Type of conductor insulating material	PVC	105°			NA		

(1) 35 kA with LUB12 for LA9ZA32427 and LA9ZA32428.

Product references

LA9ZA32443, LA9ZA32621

LA9ZA32434, LA9ZA32442

LA9ZA32622

LA9ZA32623

LA9ZA32427

LA9ZA32428

LA9ZA32624

LA9ZA32625

LA9ZA32626

For Deca Frame 2 (GV2) motor circuit breakers

Operating current AC-3 440 V	Protection by motor circuit breaker	For contactor	Mounting plate l x h x d	Min. order qty	Unit reference
Mounting plate, 1-way					
25 A	GV2ME GV2P GV2LE	LC1D LC1K LP4K06-K12	45 x 200 x 63	4	**LA9ZA32621**
32 A	GV2LE		63 x 200 x 63	4	**LA9ZA32443**
Mounting plate, 2-way (3)					
25 A	GV2ME GV2P GV2LE	LC1D LC1K LP4K06-K12	90 x 200 x 63	2	**LA9ZA32622**
32 A	GV2ME GV2P GV2LE	LC1D	45 x 200 x 63	4	**LA9ZA32434**
			54 x 200 x 63	4	**LA9ZA32442**
			90 x 200 x 63	2	**LA9ZA32623**

Ultra motor starters

Operating current AC-3 440 V	Protection by power base		Mounting plate l x h x d	Min. order qty	Unit reference
Mounting plate, 1-way					
32 A	LUB12, LUB32		45 x 200 x 63	4	**LA9ZA32427**
Mounting plate, 2-way					
32 A	LUB12, LUB32		45 x 260 x 63	4	**LA9ZA32428**

For Deca Frame 3 (GV3) motor circuit breakers

Operating current AC-3 440 V	Protection by motor circuit breaker	For contactor	Mounting plate l x h x d	Min. order qty	Unit reference
Mounting plate, 1-way (1)					
63 A	GV3P	–	54 x 200 x 63	4	**LA9ZA32624**
	GV3P	LC1D40A…65 A	54 x 260 x 63	4	**LA9ZA32625**
Mounting plate, 2-way (1) (2)					
63 A	GV3P	LC2D40A…65 A	117 x 260 x 63	4	**LA9ZA32626**

(1) Contactor-circuit breaker combination without additional part.
(2) Use the LAD9R3 kit for the execution of changeover contactors.
(3) Use the LAD9R1 or LAD9R1V kit for the execution of changeover contactors.

***Note:** the mounting plate rails can be shifted vertically in 1.25 mm increments.*

Introduction: page B1/5
Characteristics: page B1/18
Curves: page B1/19

Life Is On Schneider Electric

Product references

LA9ZX01285

LA9ZX01287

LA9ZX01413

LA9ZX01243

LA9ZX01563

Terminals

	I max		Set of	Unit reference
One-pole for flat bars, 5 mm	270 A	Capacity 4-35 mm²	50	LA9ZX01285
	400 A	Capacity 16-70 mm²	25	LA9ZX01287
3P cover, width 84 mm			10	LA9ZX01413

Terminals on mounting plate

	I max		Min. order qty	Unit reference
3P, on mounting plate + cover, for 12 x 5 to 30 x 10 busbars, width 81 mm	440 A	Capacity 35-120 mm²	1	LA9ZX01243

Connection module

	I max		Min. order qty	Unit reference
3P, spring terminal connection + cover, for 12 x 5 to 30 x 10 busbars, width 20 mm	80 A	Capacity 1.5-16 mm²	8	LA9ZX01563

Connection by connectors

		LA9ZX01285		LA9ZX01287		LA9ZX01243		LA9ZX01563	
		Min.	Max.	Min.	Max.	Min.	Max.	Min.	Max.
Flexible wire	mm²	4	35	16	70	35	120	1.5	16
Multi-strand wire	mm²	4	35	16	70	35	120	1.5	16
Rigid wire	mm²	4	35	–	–	–	–	1.5	16
Tightening torque	N.m	... x 5		... x 5		... x 5-10		... x 5-10	
Cover		LA9ZX01413		LA9ZX01413		Supplied without cover		Supplied without cover	

Introduction: page B1/5
Characteristics: page B1/18
Curves: page B1/19

Hot-plug distribution: when continuity of service is required

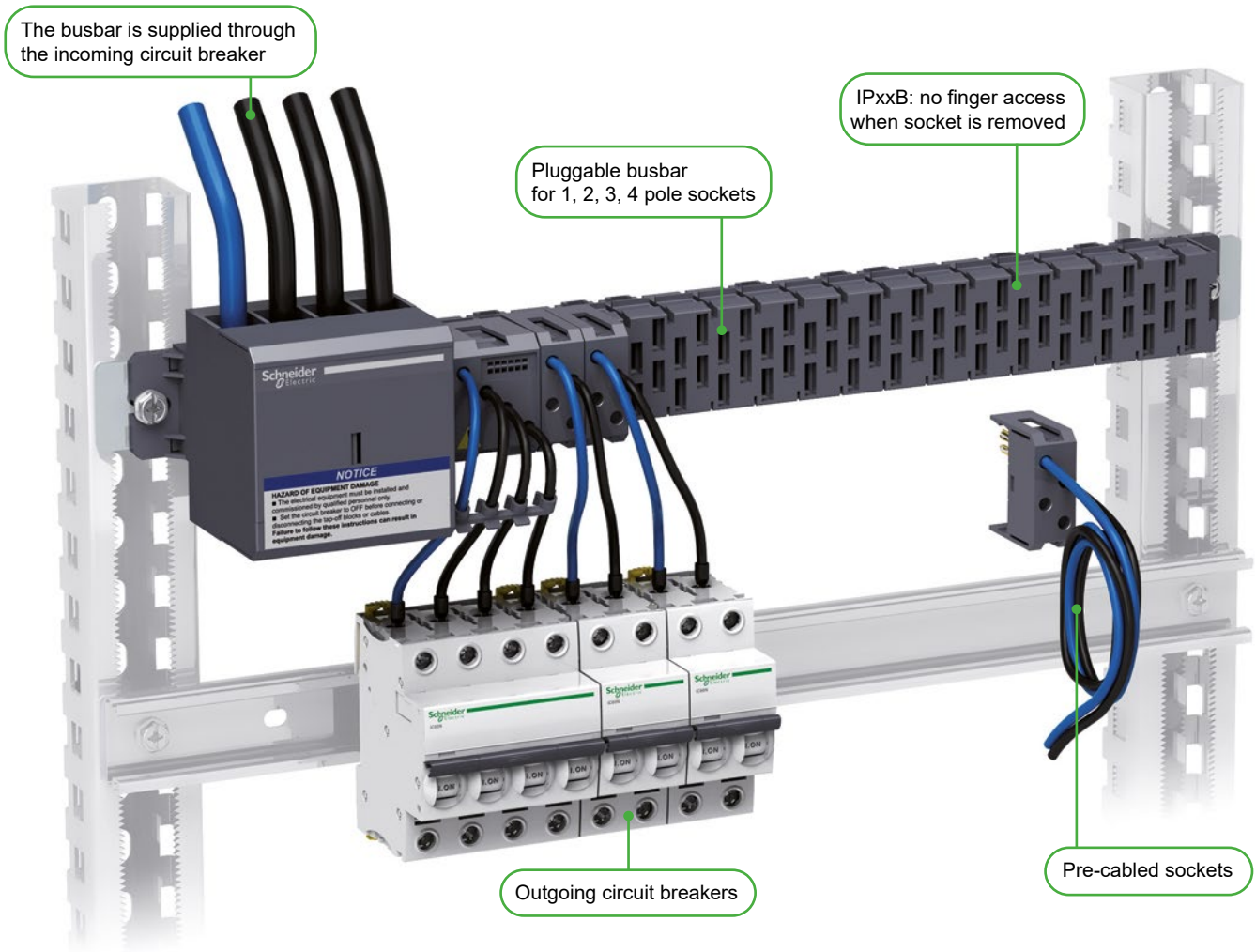

Advantages

- Considerable time saving: stand alone busbar, fixed to the chassis with 2 screws
- Preserved continuity of service during modification: live connection, disconnection (off load)
- Wide adaptability: 6 busbar lengths from 344 to 1100 mm, 12 models of sockets
- Multi standard: conform to IEC and UL standards

Detailed view: pre cabled socket

- The assembling process and the technological choices ensure a long-lasting reliability
- Each wire is welded on a spring clip providing robustness to the socket and vibration resistant contacts

Life Is On Schneider Electric

When compactness and continuity of service are required

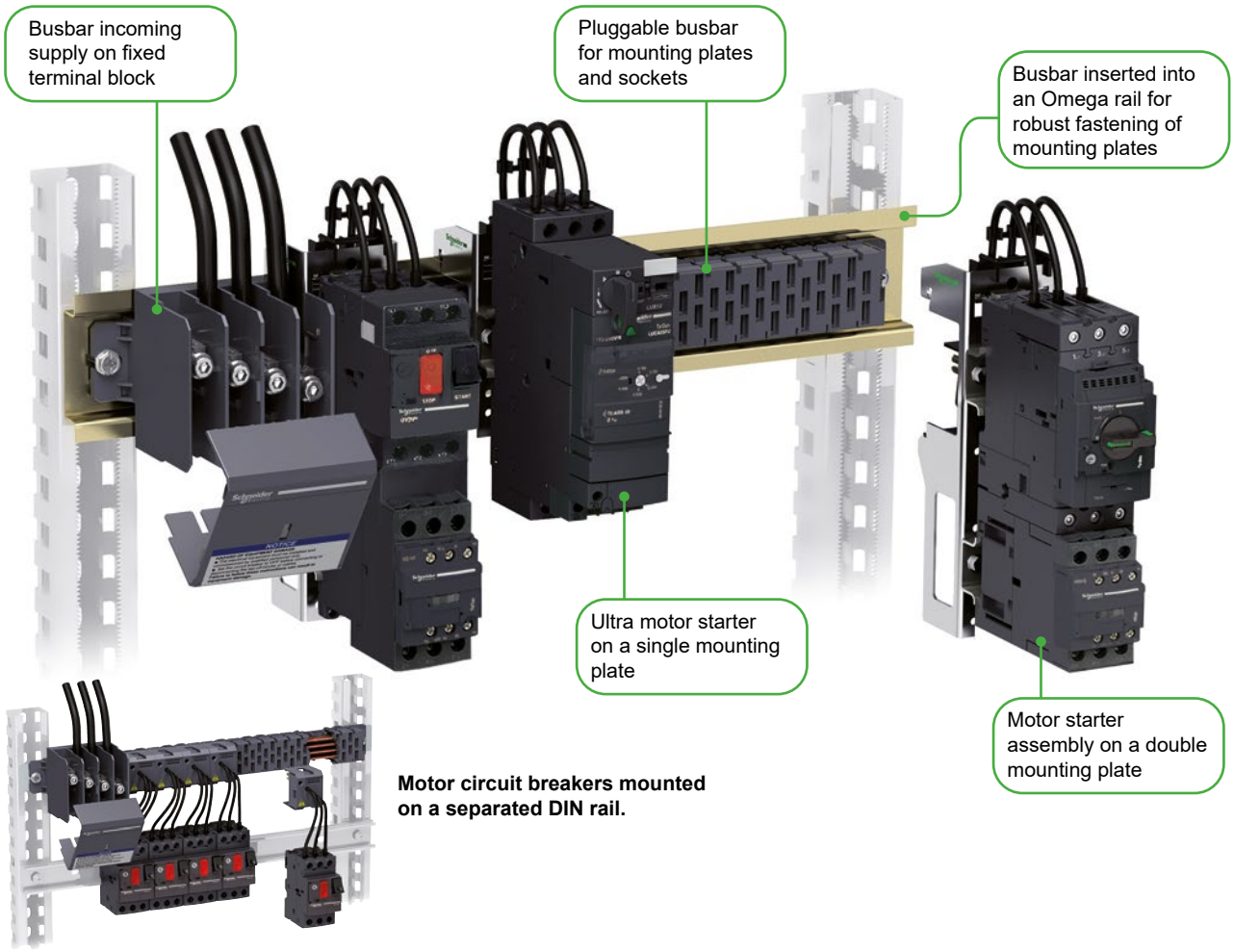

Motor circuit breakers mounted on a separated DIN rail.

Advantages

- Space saving in compact enclosures: the total volume is reduced to that of the motor starter assemblies
- Preserved continuity of service during modification and maintenance: live connection, disconnection (off load)
- Wide adaptability: 6 busbar lengths from 344 to 1100 mm, 12 models of sockets, 23 mounting plates for motor starters up to 25 or 50 A
- Multi standard: conform to IEC and UL standards

Detailed view: mounting plate back face

- Thanks to the plug and its pre-cabled wires the motor starter is safely assembled in the workshop, for immediate or later use.
- A piece of DIN profile rail is attached on the front face of the mounting plate for fastening the components.
- The metal mounting plate ensures a rigid and robust fastening on the omega rail.

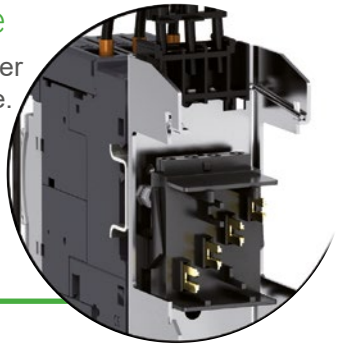

DB404140.eps

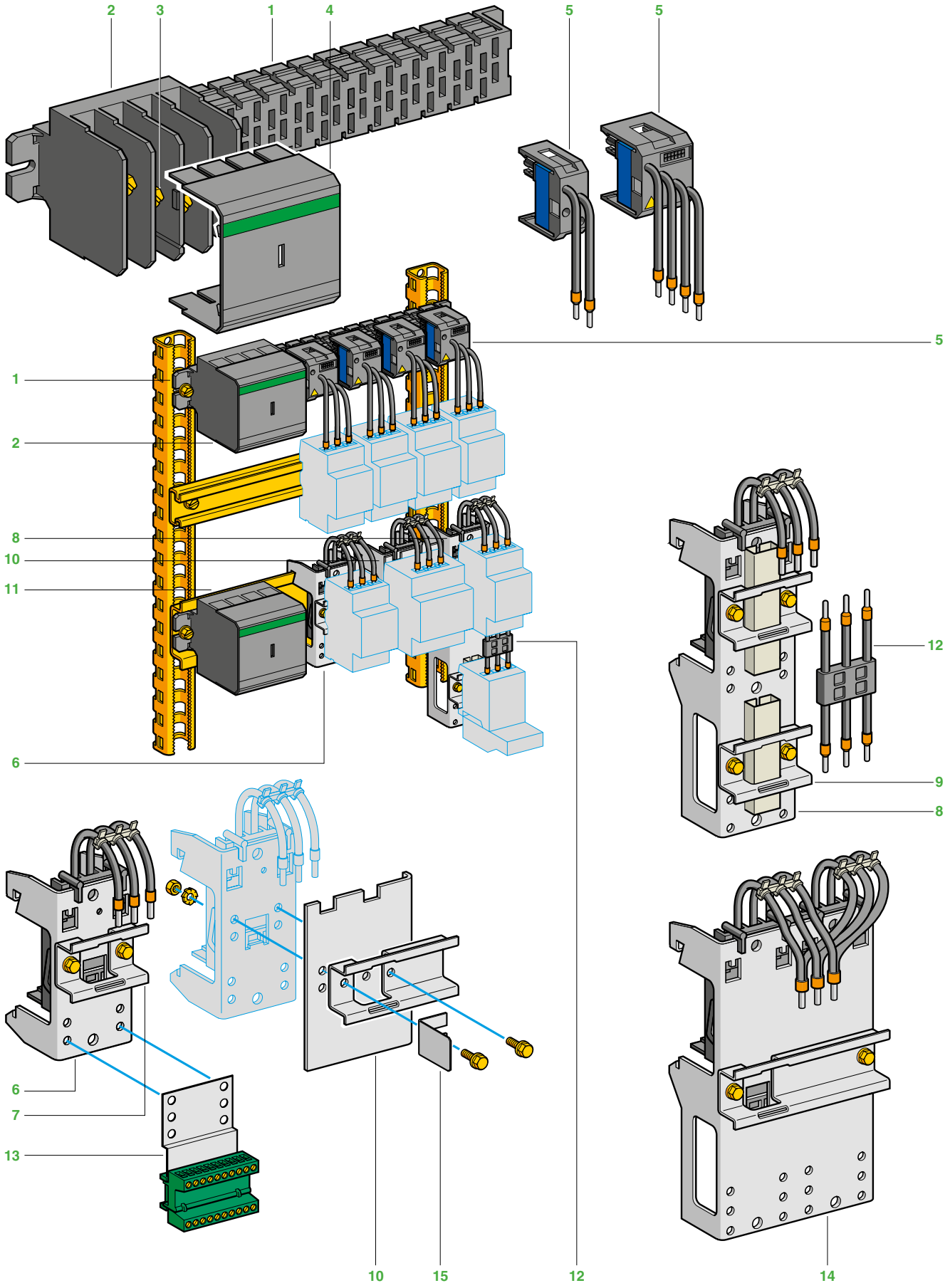

Life Is On Schneider Electric

The assembly of automated control and distribution panels requires the use of products that are not only safe but also simple and quick to mount and cable.

The Linergy HK pre-assembled busbar system meets all these criteria by incorporating prefabricated components which cater for 3 principal functions:

Carrying of electric current

By the pre-assembled 4-pole busbar system 1, 160 A at 35 °C.

4-pole busbars can be used for 3-phase + Neutral or 3-phase + Common.

The busbars are available in 6 lengths: 344, 452, 560, 668, 992, 1100 mm.

An incoming supply terminal block 2 is located at the extreme left of the busbar.

"Knock-out" partitions allow connection of the power supply from above or below to connectors 3 which are protected by a removable cover 4.
Upstream protection of the busbar is shown on page B1/20.

Current distribution

Tap-off units 5 (factory assembled) are available in 4 versions:
- 2-pole,
- 3-pole,
- 4-pole (3-phase + Neutral),
- 4-pole (3-phase + Common).

The tap-offs clip onto the busbar with instantaneous mechanical and electrical connection to the busbars.
2 ratings are available: 16 and 32 A.
The tap-off units ensure not only rapid mounting, but also a neat appearance for the power distribution system and complete safety when accessing under live circuit conditions.

Component mounting

Component mounting plates with incorporated tap-off allow mounting of and supply of power to components.
They are available in 25 A or 50 A ratings.

These mounting plates clip onto the mounting rail 11, which also supports the busbar, and at the same time make electrical connection via the incorporated tap-off.

2 types of mounting plate are available:
- single plates 6 (height 105 mm), with bolt-on 35 mm wide ⊥ rail 7, which may be bolted on in one of two positions, allowing height adjustment of 10 mm.
- double plates 8 and 14 (height 190 mm), with two bolt-on, 35 mm wide ⊥ rails 9 mounted on 100 mm fixing centres; each rail may be bolted on in one of 4 positions, allowing height adjustment in 10 mm steps. These plates are supplied with connectors 12 to allow wiring between control and protection devices.

Single mounting plates enable the following types of distribution:
- 2-pole (Ph + N) and (Ph + Ph)
- 3-pole,
- 4-pole (3 Ph + N or 3 Ph + common).

Double mounting plates enable the following types of distribution: 2-pole (Ph + N, Ph + Ph), 3-pole or 4-pole (3Ph+N and 3Ph + common).

Extension plates 10 can be bolted onto single and double mounting plates to enable mounting of wider components. Using a side stop 15 in conjunction with these extension plates also supports the Linergy HK busbar when used vertically.

A control terminal block 13 comprising a support plate bolted onto the single or double mounting plates and a 10-pole plug-in block, enables connection of the control circuit wires (c.s.a. 1.5 mm^2 max).

References:
pages B1/14 to B1/16
Characteristics:
pages B1/20 and B1/21
Dimensions:
pages B1/22 and B1/23

Product references

PB112406_R.eps

AK5JB1pp

Busbars

The busbars can be screw-mounted onto any type of support. However. if it is to be used in conjunction with component mounting plates incorporating a tap-off, it is essential that it is mounted on the AM1DL201 rail.
When mounting tap-offs, the rated operational current of the busbar should be taken into account: 160 A at 35 °C.

Number of conductors	Number of tap-offs at 18 mm intervals	Length	Suitable for mounting in enclosure width	Reference	Weight
		mm	mm		kg
4 (1)	12	344	600	**AK5JB143**	0.700
	18	452	800	**AK5JB144**	0.900
	24	560	800	**AK5JB145**	1.100
	30	668	800	**AK5JB146**	1.300
	48	992	1200	**AK5JB149**	1.900
	54	1100	1200	**AK5JB1410**	2.100

PB112411_R.eps

AK5PC12

PB112412_R.eps

AK5PC14

Removable power sockets

Use	Number of points used on the busbar system		Thermal current	Cable lengths	Min. order qty	Unit reference
		Width	A	mm		
Single-phase + Neutral	1	9 mm	16	200	6 (2)	**AK5PC12**
			32	1000	6 (2)	**AK5PC32L**
2-phase	1		16	200	6 (3)	**AK5PC12PH**
			32	1000	6 (3)	**AK5PC32LPH**
3-phase	2	18 mm	16	200	6	**AK5PC13**
			32	250	6	**AK5PC33**
				1000	6	**AK5PC33L**
3-phase + Neutral	2		16	200	6	**AK5PC14**
			32	250	6	**AK5PC34**
				1000	6	**AK5PC34L**
3-phase + common	2		16 10 (common)	200	6	**AK5PC131**
			32 10 (common)	250	6	**AK5PC331**

(1) 4-pole: 3-phase + Neutral or 3-phase + Common.
(2) Total of 6 sockets supplied: 2 sockets (N + L1), 2 sockets (N + L2). 2 sockets (N + L3).
(3) Total of 6 sockets supplied: 2 sockets (L1 + L2), 2 sockets (L1 + L3). 2 sockets (L2 + L3).

Introduction:
page B1/13

Characteristics:
pages B1/20 and B1/21

Dimensions:
pages B1/22 and B1/23

Life Is On Schneider Electric

Product references

PB112407_R.eps

AK5PA241

PB112408_R.eps

AK5PA242

PB500804_R.eps

AM1DL201

Component mounting plates incorporating tap-off

Single plate (height 105 mm). Compatible devices: GV2●●● / LUB●●●.

Use	No. of 18 mm points used on the busbar system	Phase	Thermal current	Number of ⊔ rails for component support	Min. order qty	Reference
			A			
Single-phase + neutral	3 (54 mm width)	Ph1+N	25	1	1	**AK5PA211N1**
		Ph2+N	25	1	1	**AK5PA211N2**
		Ph3+N	25	1	1	**AK5PA211N3**
2-phase	3	Ph1+Ph2	25	1	1	**AK5PA211PH12**
		Ph1+Ph3	25	1	1	**AK5PA211PH13**
		Ph2+Ph3	25	1	1	**AK5PA211PH23**
3-phase	3	–	25	1	1	**AK5PA231**
3-phase + common	3	–	25	1	1	**AK5PA2311**
3-phase + neutral	3	–	25	1	1	**AK5PA241**

Double plate (height 190 mm). Compatible devices: GV2●●● + LC1D●●●.

Prefabricated 25 A connectors are supplied for connecting the 2 protection and control devices.

Single-phase + neutral	3	Ph1+N	25	2	1	**AK5PA212N1**
		Ph2+N	25	2	1	**AK5PA212N2**
		Ph3+N	25	2	1	**AK5PA212N3**
3-phase	3	–	25	2	1	**AK5PA232**
	6 (108 mm width)	–	25	2	1	**AK5PA232S**
			50	1	1	**AK5PA532**
3-phase + neutral	3	–	25	2	1	**AK5PA242**
3-phase + common	3	–	25 (10 common)	2	1	**AK5PA2312**
	6	–	25 (10 common)	2	1	**AK5PA2312S**
			50 (10 common)	1	1	**AK5PA5312**
3-phase + neutral	6	–	50	1	1	**AK5PA542**

Omega rail, width 75 mm

This rail is designed to accommodate the busbar system when it is used with Linergy HK mounting plates incorporating tap-offs. It supports the busbar system. The plates simply clip onto the rail.

Material and surface treatment	Depth	Length	Min. order qty	Reference	Weight
	mm	mm			kg
2 mm sheet steel	15	2000 (4)	6	**AM1DL201**	3.000

PB112404.eps

AK5BT01

DF523288.eps

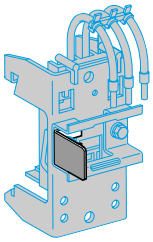

PB112415.eps

AK5SB1

Extension plates

These plates bolt onto the equipment support plates, after having removed them from the rails, to be able to mount wider components.

Use		Number of tap-offs at 18 mm intervals	Reference
For mounting plates incorporating tap-off	Single	4	**AK5PE17**
	Double	4	**AK5PE27**

Side stop (AK5JB mounted vertically)

Use	Set of	Reference
For extension plate (for AK5PA●●●)	50	**AK5BT01**

Control terminal blocks

Description	Thermal current A	Set of	Reference
10-pole terminal blocks, for screwing onto plate AK5 PA●●●			
	10	10	**AK5SB1**

Note:

- *if the equipment is wider than the mounting plate, an extension plate can be used to increase the width of the support plate.*
- *for upstream protection, see page B1/20.*

Linergy BZ, HK

Technical Data for Designers

Contents

Linergy BZ:
> characteristics B1/18
> curves B1/19
Linergy HK:
> characteristics ..... B1/20 and B1/21
> dimensions ..... B1/22 and B1/23

Characteristics

LA9ZX01495

LA9ZX01485

LA9ZX01508

General characteristics

		LA9ZX01495 and LA9ZX01485 (IEC 6.439-1)							
Bar dimensions compatibility	**mm**	12 x 5	15 x 5	20 x 5	25 x 5	30 x 5	12 x 10	20 x 10	30 x 10
Max. rated operating current	**A**	200	250	320	400	450	360	520	630
Min. peak permissible rated current	**kA**	30	30	30	30	45	35	35	53
Distance max. between 2 busbars supports	**mm**	570	570	570	570	570	570	570	570
Degree of protection	**IP**	20 (with cover LA9ZX01244 or LA9ZX01245)							
Thermal resistance	**°C**	125							
Rated current frequency	**Hz**	50/60							
Rated insulation voltage	**V**	690							
Rated operating voltage	**V**	690							

			LA9ZX01508 (UL) 508 A					
Bar dimensions compatibility		**mm**	12 x 5	20 x 5	30 x 5	12 x 10	20 x 10	30 x 10
Rated operating current		**A**	150	362	500	300	564	630
I_{eff} (RMS) surge current		**kA**	18	18	22 - 25	18	18	22 - 25
SCCR (protected by Compact NSX circuit breaker)	250 A 480 V AC	**kA**	65	-	-	65	-	-
	250 A 600 V AC		25	-	-	25	-	-
	400 A 480 V AC		-	65	65	-	65	65
	400 A 600 V AC		-	35	35	-	35	35
	500 A 480 V AC		-	-	65	-	-	65
	600 A 600 V AC		-	-	35	-	-	
	600 A 480 V AC		-	-	50	-	-	50
	600 A 600 V AC		-	-	25	-	-	25
SCCR (protected by fuses Class J or T ...)	400 A 480 V AC		100	100	100	100	100	100
	500 A 480 V AC		-	-	100	-	-	100
	500 A 600 V AC		-	-	100	-	-	100
Distance max. between 2 busbars supports (busbar protected)		**mm**	400	800	800	400	800	800
Degree of protection		**IP**	20 (with cover LA9ZX01244 or LA9ZX01245)					
Thermal resistance		**°C**	125					
Rated current frequency		**Hz**	50/60					
Rated operating voltage		**V**	600					

Curves

Determining the spacing between busbar supports (LA9ZX01495 and LA9ZX01485), according to IEC 61439-1 (1)

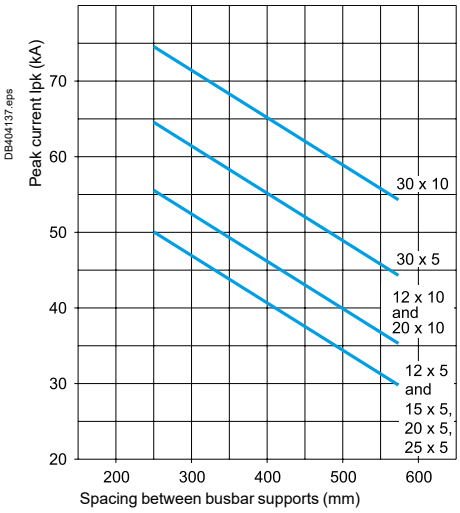

Short-circuit strength diagram according to UL845 (LA9ZX01508)

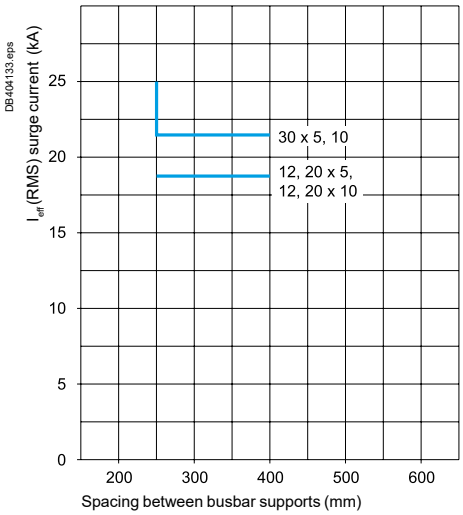

(1) Depending on the short-circuit current.

Load resistance of busbar assemblies in IEC applications

For an ambient temperature of 35 °C and a busbar temperature of 65 °C

Cross section	mm²	12 x 5	15 x 5	20 x 5	25 x 5	30 x 5	12 x 10	20 x 10	30 x 10
Permissible current	**A**	**200**	**250**	**320**	**400**	**450**	**360**	**520**	**630**

In the event of changes in climatic conditions, the following curve indicates the correction factor K_2 to be applied.

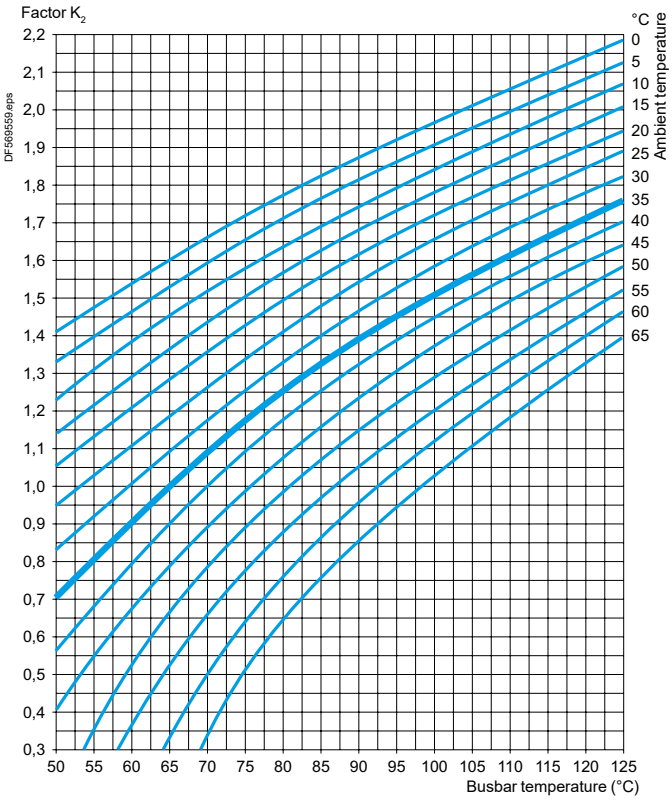

Example: In normal operating conditions, a tinned busbar of 30 x 10 can permanently withstand 630 A.

For a load of 800 A, the correction factor K_2 to be applied will be 1.3 ($\frac{800\ A}{630\ A}$). As a result, the temperature rise in the busbars will reach 82.5 °C.

Introduction: page B1/5
References: pages B1/6 to B1/9
Characteristics: page B1/18

Characteristics

Busbar system characteristics

Conforming to standards			IEC 60439					
Product certifications			UL, CSA, DNV, LROS					
Degree of protection	Against access to live parts		IP XXB conforming to IEC 60529					
Flame resistance	Conforming to IEC 60695	°C	850 (incandescent wire)					
	Conforming to standard UL 94		V0					
Number of conductors	AK5JB14●		4					
Supply current			∼					
Rated operational frequency		Hz	50 or 60					
Rated operational current	Ambient temperature 35 °C	A	160					
	Coefficient K to be applied according to the ambient temperature	°C	35	40	45	50	55	60
		K	1	0.96	0.92	0.88	0.83	0.78
Rated insulation voltage	Conforming to IEC 60439-1	V	690					
	Conforming to UL and CSA	V	600					
Operational voltage			Off-load plugging-in and unplugging, with supply switched on					
	Conforming to IEC 60439-1	V	400					
	Conforming to UL, CSA	V	480					
			Plugging-in and unplugging, with supply switched off					
	Conforming to IEC 60439-1	V	690					
	Conforming to UL, CSA	V	600					
Maximum permissible peak current		kA	25					
Maximum let-through energy		A^2s	1×10^7					
Upstream short-circuit (1) and overload protection	Type of protection		Schneider Electric circuit-breaker			Fuses		
			NSX 160 N	NSX 160 H		aM	gF	
	Rating	A	160	160		160	160	
	Prospective short-circuit current	kA	36	70		100	100	
	Operational current	A	160	160		160	160	
Cabling			Maximum c.s.a.			Minimum c.s.a.		
	Flexible cable with cable end	mm^2	70			2.5		
	Solid cable	mm^2	70			2.5		
	Tightening torque	Nm	10					
Mounting position	Horizontal or vertical (2)		Fixing with screws provided					

(1) For conditions where conditional short-circuit current exceeds 25 kA.
(2) Using side stop **AK5BT01** *on mounting plates* **AK5PA**.

Introduction: page B1/13
References: pages B1/14 to B1/16
Dimensions: pages B1/22 and B1/23

Life Is On Schneider Electric

Characteristics

Tap-off characteristics

Type		AK5 PC12	AK5 PC12PH	AK5 PC13	AK5 PC14	AK5 PC131	AK5 PC32L	AK5 PC32LPH	AK5 PC33 PC33L	AK5 PC34 PC34L	AK5 PC331
Conforming to standards		IEC 60439									
Product certifications		UL, LROS, CSA, DNV									
Degree of protection		Against access to live parts: IP XXB conforming to IEC 529									
Polarity		Phase + Neutral	Phase + Phase	3-phase	3-phase + Neutral	3-phase + Common	Phase + Neutral	Phase + Phase	3-phase	3-phase + Neutral	3-phase + Common
Conductor c.s.a. (UL cables)	mm²	2 x 2.5	2 x 2.5	3 x 2.5	4 x 2.5	3 x 2.5 1 x 1.5	2 x 4	2 x 4	3 x 4	4 x 4	3 x 4 1 x 1.5
Conductor colours		Black Blue (Neutral)	Black	Black	Black Blue (Neutral)	Black White	Black Blue (Neutral)	Black	Black	Black Blue (Neutral)	Black White (Common)
Permissible current	A	16	16	16	16	16 10 (Common)	32	32	32	32	32 10 (Common)
Rated insulation voltage	V	690 conforming to IEC 60439-1									
Rated peak current	kA	6									
Maximum let-through energy	A²s	100 000					200 000				
Type of conductor insulation		PVC 105 °C									

Tap-off characteristics

Type		AK5 PA211N1 PA211N2 PA211N3 PA212N1 PA212N2 PA212N3	AK5 PA211PH12 PA211PH13 PA211PH23 PA212PH12 PA212PH13 PA212PH23	AK5 PA231 PA232 PA232S	AK5 PA241 PA242	AK5 PA2311 PA2312 PA2312S	AK5 PA532	AK5 PA542	AK5 PA5312
Conforming to standards		IEC 60439							
Product certifications		UL, LROS, CSA, DNV							
Degree of protection		Against access to live parts: IP XXB conforming to IEC 60529							
Polarity		Phase + Neutral	Phase + Phase	3-phase	3-phase + Neutral	3-phase + Common	3-phase	3-phase + Neutral	3-phase + Common
Conductor c.s.a. (UL cables)	mm²	2 x 4	2 x 4	3 x 4	4 x 4	3 x 4 1 x 1.5	2 x (3 x 4)	2 x (4 x 4)	2 x (3 x 4) 1 x 1.5
Permissible current	A	25	25	25	25	25 10 (Common)	50	50	50 10 (Common)
Rated insulation voltage	V	690 conforming to IEC 60439-1							
Rated peak current	kA	6							
Maximum let-through energy	A²s	200 000							
Type of conductor insulation		PVC 105 °C							

Characteristics of mounting rails AM1DL201

Type		Omega ⌓ (width 75 mm, depth 15 mm)
Material		2 mm sheet steel
Surface treatment		Galvanized

Introduction: page B1/13
References: pages B1/14 to B1/16
Dimensions: pages B1/22 and B1/23

Dimensions

Busbars

AK5JB●●●

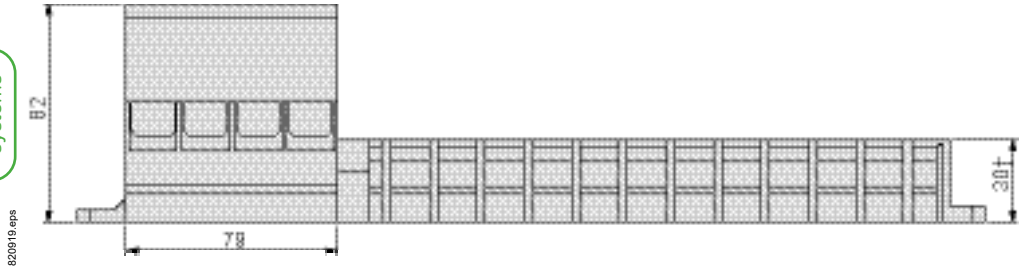

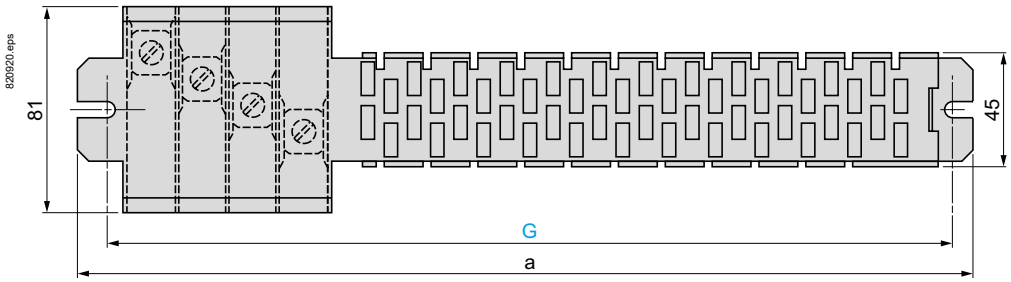

AK5	a	G	No. of 18 mm points
JB143	344	330	12
JB144	452	438	18
JB145	560	546	24
JB146	668	654	30
JB149	992	978	48
JB1410	1100	1086	54

Busbar feed units

AK5JB●●●

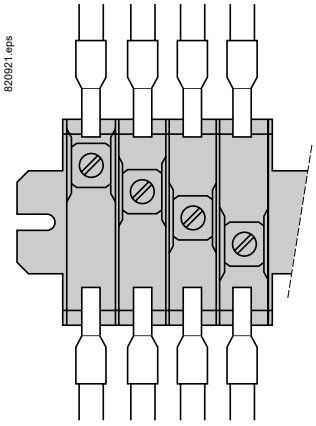

Installation of AK5JB●●● busbar systems

Connection			C.s.a. in mm² min	C.s.a. in mm² max
Flexible cable with or without cable end			1 x 2.5 2 x 2.5	1 x 70 (1) 2 x 35
Flexible bar			–	2 x (9 x 4)
Flexible bar + flexible cable with or without cable end			9 x 4 + 1 x 2.5	9 x 4 + 1 x 35

(1) Maximum c.s.a. or connection of conductor without cable end.

Removable power sockets 16 and 32 A

AK5PC12●. AK5PC32L●

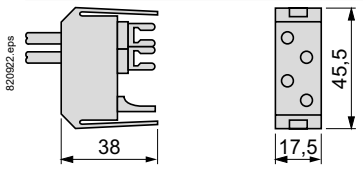

AK5PC●3. AK5PC33L
AK5PC●4. AK5PC34L
AK5PC●31

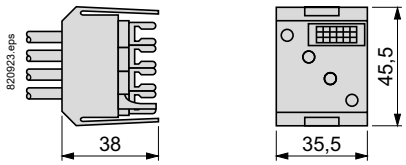

Mounting plates incorporating tap-offs, 25 A

AK5PA2●1. AK5PA2311. AK5PA211●●●●

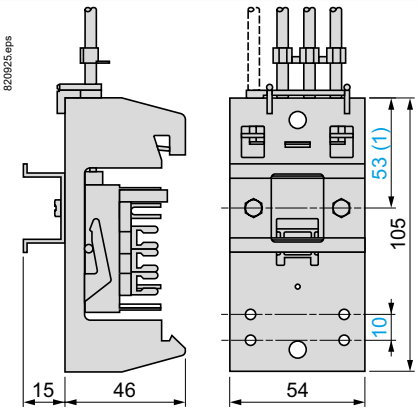

Single width extension plates

AK5PE17

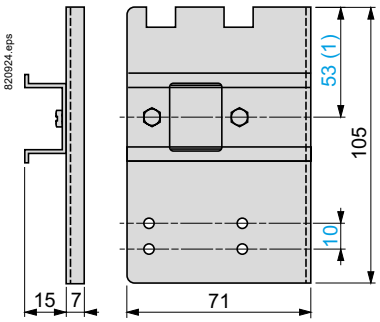

Note: *It is recommended that the power sockets or the removable plates are connected as close as possible to the busbar feed unit.*

(1) Can be fixed at 43 mm.

Introduction: page B1/13
References: pages B1/14 to B1/16
Characteristics: pages B1/20 and B1/21

Life Is On Schneider Electric

Dimensions

Component mounting plates incorporating tap-off

AK5PA232. AK5PA2312. AK5PA242

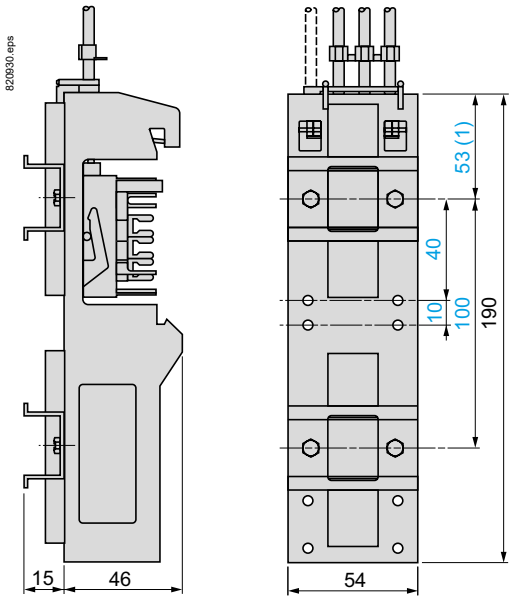

Double extension plate

AK5PE27

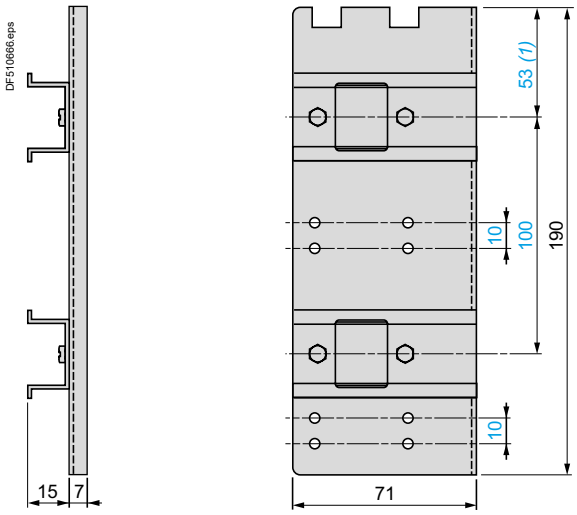

Component mounting plates incorporating tap-off

AK5PA232S. AK5PA2312S

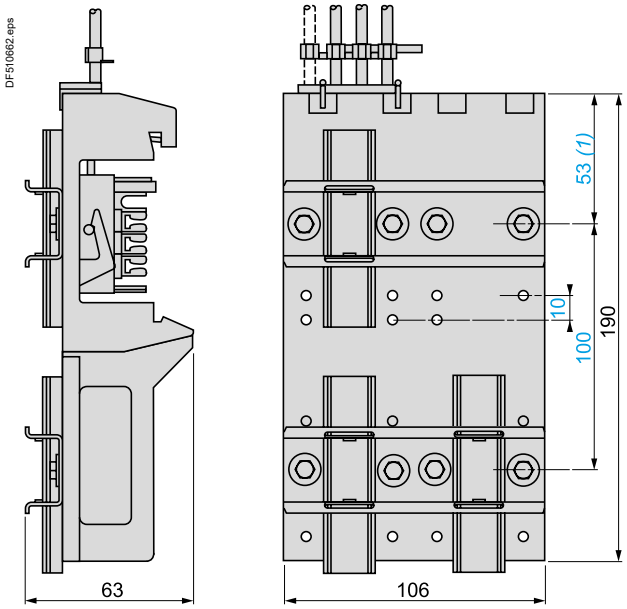

AK5PA532. AK5PA5312. AK5PA542

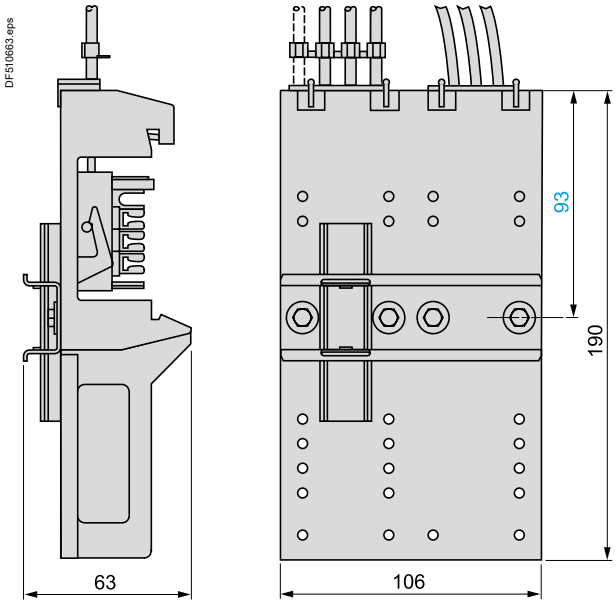

Side stop

AK5BT01

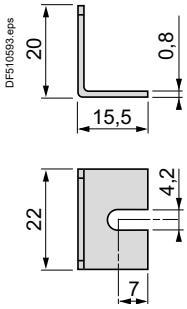

Control terminal block

AK5SB1

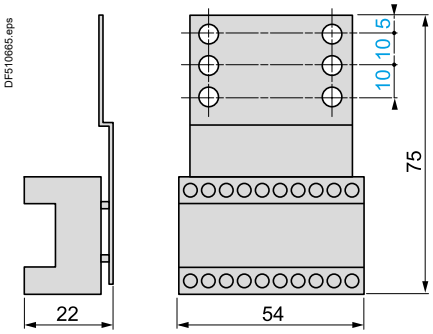

(1) Can be fixed at 43 mm.

Introduction:
page B1/13

References:
pages B1/14 to B1/16

Characteristics:
pages B1/20 and B1/21

Life Is On Schneider Electric

TeSys Control
Wiring systems for motor starters

Power wiring systems for motor starters	
Type of product	**Pages**
Power wiring system for motor starter assemblies: screw clamp connection 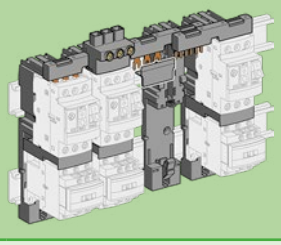	B2/2
Power wiring system for motor starter assemblies: spring terminals connection	B2/4
RJ45 Control wiring systems for motor starters	
Motor starters-to-PLC Control wiring architectures Selection tables	B2/6
RJ45 connection module for Ultra motor starter Pluggable 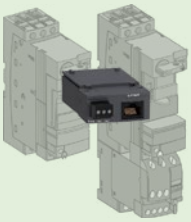	B2/8

Technical Data for Designers B2/11

DB417847-new.eps

Group of circuit breakers directly mounted on DIN rail

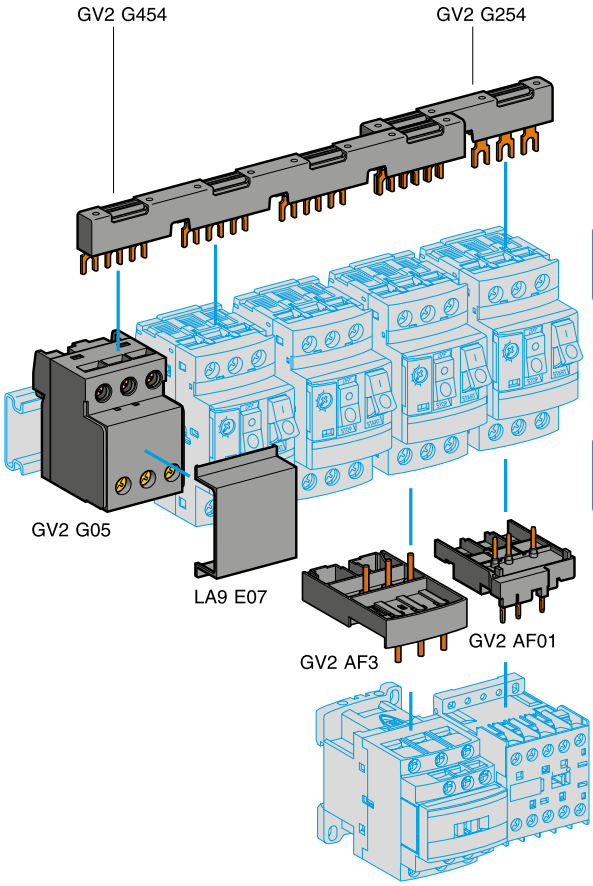

Group of circuit breakers + contactors mounted on adapter plates

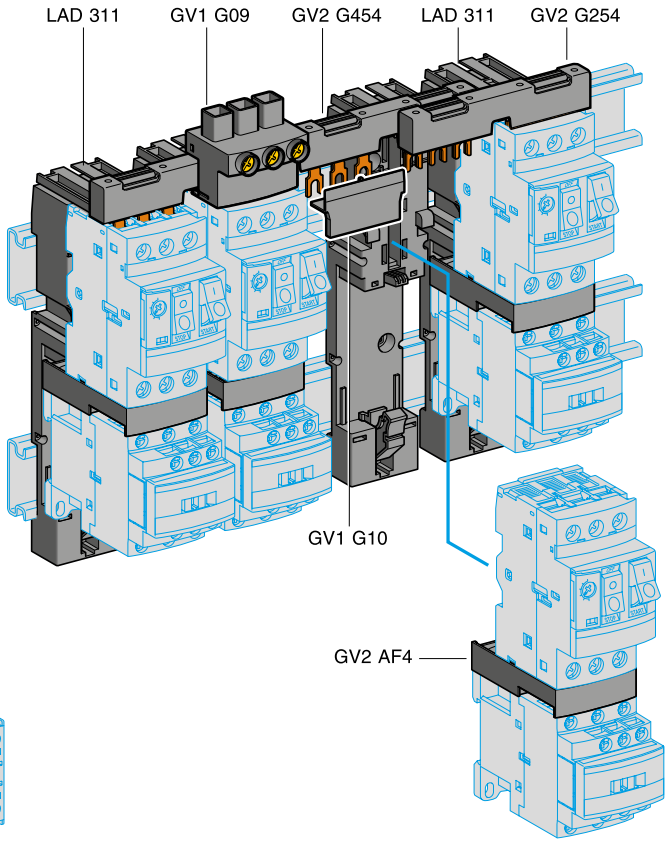

Life Is On Schneider Electric

Product references

This system is convenient when time and space savings are required.
The motor starter can be composed of:
■ Deca Frame 2 (GV2) circuit breaker + Deca (LC1D) contactor.

Upstream busbars and terminals

Description	Application	Pitch (mm)	Unit reference
Sets of 3-pole 63 A busbars	2 tap-offs	45	**GV2G245**
		54	**GV2G254**
		72	**GV2G272**
	3 tap-offs	45	**GV2G345**
		54	**GV2G354**
	4 tap-offs	45	**GV2G445**
		54	**GV2G454**
		72	**GV2G472**
	5 tap-offs	54	**GV2G554**

Description	Application	Sold in lots of	Unit reference
Terminal block for supply to one or more GV2G busbar sets	Connection from the top	1	**GV1G09**
	Can be fitted with current limiter GV1L3 (GV2ME and GV2P)	1	**GV2G05**
Cover for terminal block	For mounting in modular panels	10	**LA9E07**
Protective end cover	For unused busbar outlets	5	**GV1G10**

Assembling components

Description	Application	Sold in lots of	Unit reference
Combination blocks	Between GV2 and contactor LC1K or LP1K (1)	10	**GV2AF01**
	Between GV2 and contactor LC1D09…D38 (1)	10	**GV2AF3**
	Between GV2 mounted on LAD311 and contactor LC1D09…D38	10	**GV2AF4**
Adapter plates	For mounting a GV2ME and contactor LC1D09…D38 with front faces aligned	1	**LAD311**
Height compensation plate	7.5 mm	10	**GV1F03**

(1) Ensures both the connection and a rigid support to the contactor. No extra fixing mean required.

PB111872.eps

GV2AF02

Accessories

Description	Application	Sold in lots of	Unit reference
Adapter plates	For mounting a GV2 by screw fixing	10	**GV2AF02**
Motor starter adapter plate	For mounting a GV2 and a contactor LC1D09…D25. Item delivered with a GV1G02 flexible connection	1	**GK2AF01**
Flexible 3-pole connection for connecting a GV2 to a contactor LC1-D09…D25	Centre distance between mounting rails: 100…120 mm	10	**GV1G02**
Incoming line spacer for UL 508 Type E applications	For GV2P (except 32 A)	1	**GV2GH7**
Clip-in marker holders (supplied with each circuit breaker)	For GV2 P, GV2L, GV2LE and GV2RT (8 x 22 mm)	100	**LA9D92**

PB111907.eps

GK2AF01

PB111869.eps

GV1G02

Dimensions:
page B2/13

DB438737-new.eps

Group of circuit breakers + contactors mounted on adapter plates

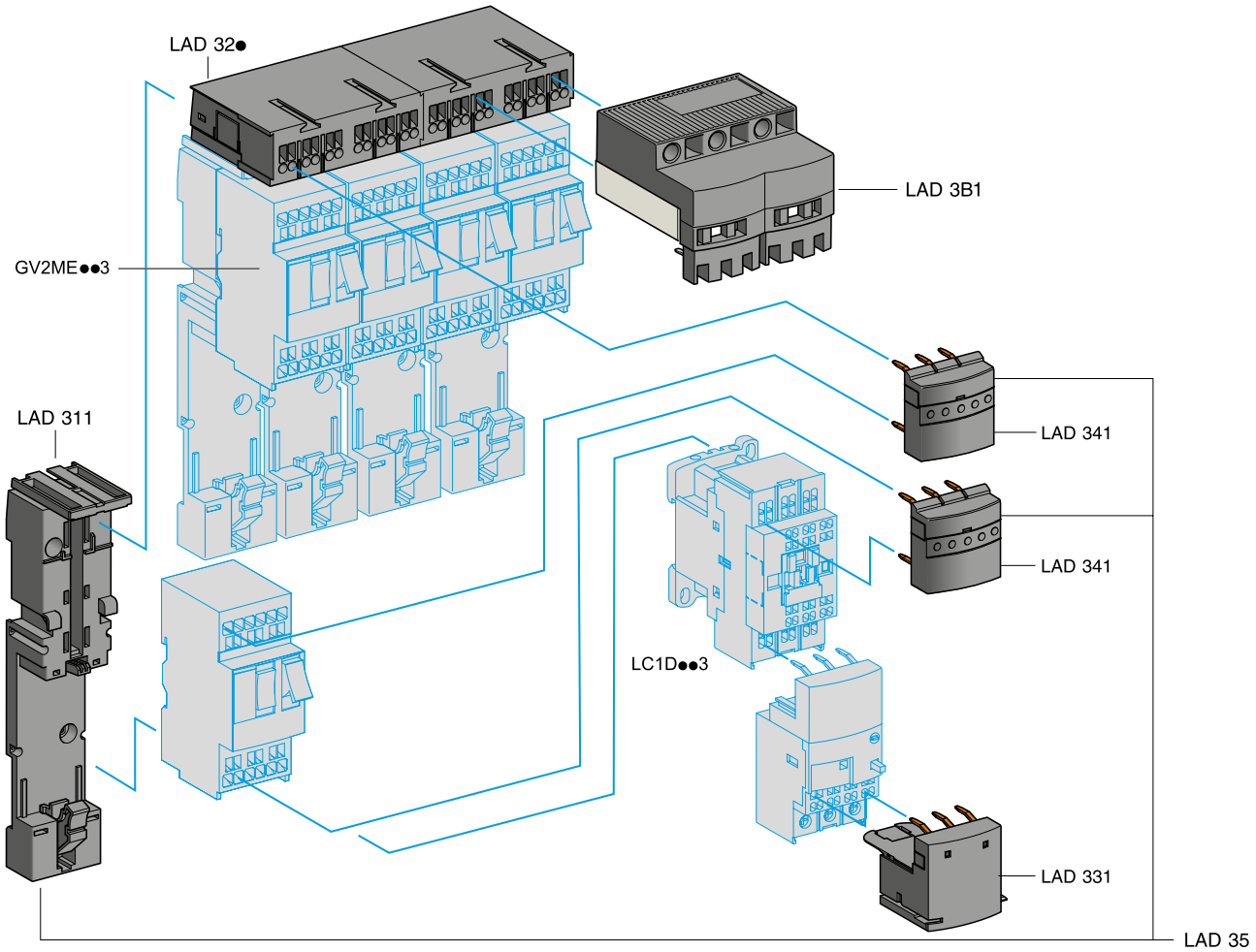

Power circuit pre-wiring components
Direct starter

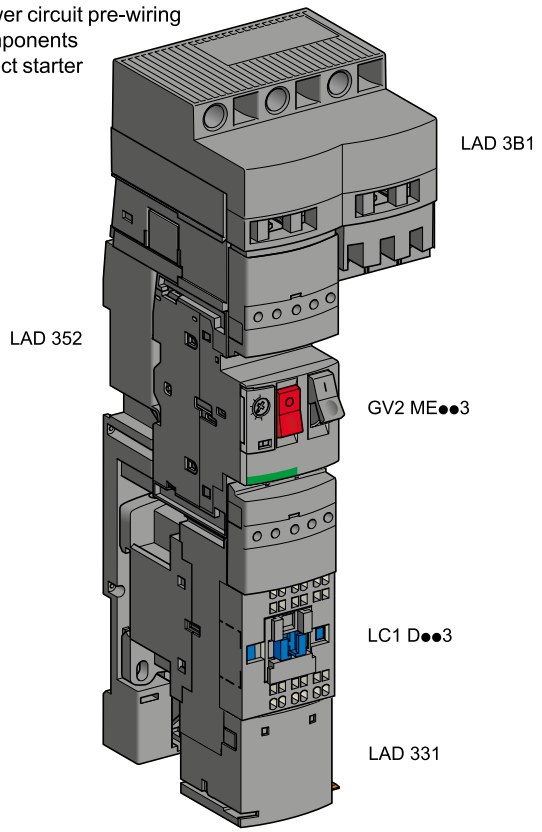

Power circuit pre-wiring components
Reversing starter

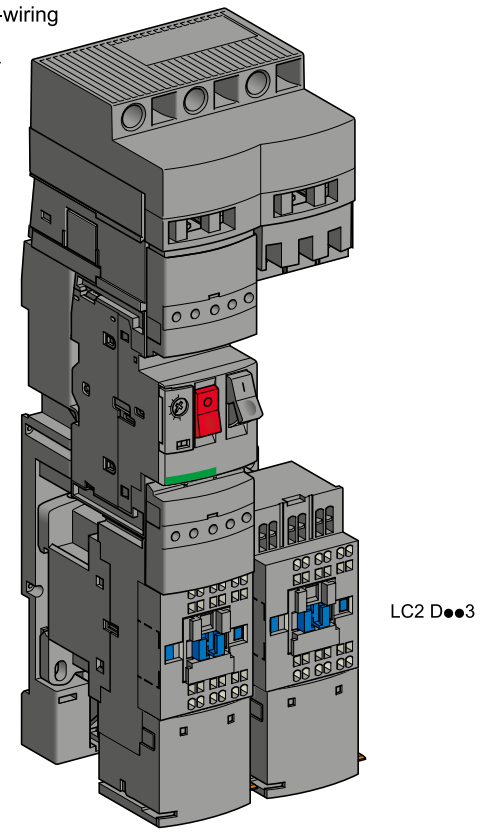

Life Is On Schneider Electric

Product references

This system is convenient when time and space savings are required.
The motor starter can be composed of:
■ Deca Frame 2 (GV2) circuit breaker + Deca (LC1D) contactor

PB111855.eps

LAD3B1

PB111843.eps

LAD324

Upstream terminal and splitter blocks

Description	Maximum connection c.s.a.	Application	Sold in lots of	Reference
Upstream terminal block	16 mm² (1)	Power supply of 1 or 2 power splitter boxes	1	**LAD3B1**
Description	**Extension by**	**Number of starters**		**Reference**
Power splitter box, 60 A	LAD32●	2	1	**LAD322**
		4	1	**LAD324**

PB121279.eps

LAD311

PB114204.eps

LAD341

Assembling components

Description	Composition	Sold in lots of	Reference
Plate for mounting a GV2ME circuit breaker and a contactor	For 1 starter	10	**LAD311**
Power connection module	For 1 starter	10	**LAD341**
Power connection kit for direct starter (2)	1 plate LAD311 for GV2ME and 2 power connection modules LAD341		**LAD352**

PB121280.eps

LAD331

Downstream terminal and accessory

Description	Maximum connection c.s.a.	Application	Sold in lots of	Reference
Downstream terminal block	6 mm²	Connection of motor cables	10	**LAD331**
Cable end reducer	-	For connection of conductors from 1 to 1.5 mm²	20	**LAD99**

(1) Cables with one end pre-crimped are available to allow fast connection. References:
*1 set of 3 x 6 mm² cables (length 1 m: **LAD3B061**, length 2 m: **LAD3B062** and length 3 m: **LAD3B063**),*
*1 set of 3 x 10 mm² cables (length 1 m: **LAD3B101**, length 2 m: **LAD3B102** and length 3 m: **LAD3B103**),*
*1 set of 3 x 16 mm² cables (length 1 m: **LAD3B161**, length 2 m: **LAD3B162** and length 3 m: **LAD3B163**).*
*(2) To build a reversing starter, order 2 kits **LAD352**.*

Dimensions:
page B2/12

Selection table

Product type	Connection interfaces for a group of motor starters		
IO system name	Modicon TM3	Modicon Telefast	Modicon STB
Architecture	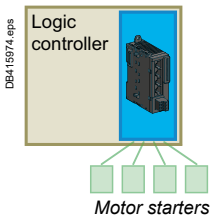	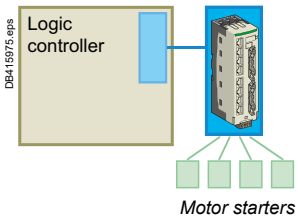	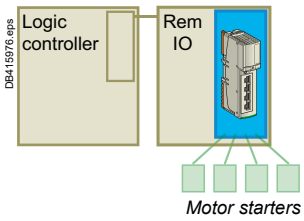
Application	Control of single or multiple motor-starters assemblies by mean of a logic controller. Machines or processes requiring easy, fast cabling and replacement of motor starters.		
Function	**IO module:** Ensures the direct connection of up to **4 motor starters** to logic controller (Modicon M221, M241, M251)	**Splitter box:** Ensures the connection of up to **8 motor starters** to a logic controller via Modicon Telefast multiwire cable	**IO module:** Ensures the connection of up to **4 motor starters** to a logic controller via an automation island (Modicon STB distributed IO architecture)
Upstream compatibility	With Modicon M221, M241, M251 logic controller, via logic controller internal bus	With any logic controller equipped with HE10 inputs/ outputs module	With Modicon STB automation island, via automation island internal bus
Upstream connectors	Backplane bus connector	HE10 connector	Backplane bus connector
Compatibility: Motor circuit breaker - Type	All types of motor starters equipped with RJ45 connection system		
Compatibility: Contactor - Type / Amp			
Compatibility: Motor circuit breaker + Contactor - terminals			
Motor control	Reversing / Non reversing		
Number of motor starters	4	8	4
Downstream connector type	RJ45		
Reference	TM3XTYS4	LU9G02 / LU9G03	STBEPI2145K *
Pages	Refer to Modicon M221/M241/ M251 catalogue	Ultra motor starters - pages B2/8 and A4/24	Refer to IP20 distributed IO Modicon STB catalogue

** STBEPI2145K: GV2 + contactor D09 to D32, Ultra only.*

RJ45 connection components for motor starter

Common components for Modicon TM3, Modicon Telefast, Modicon STB systems

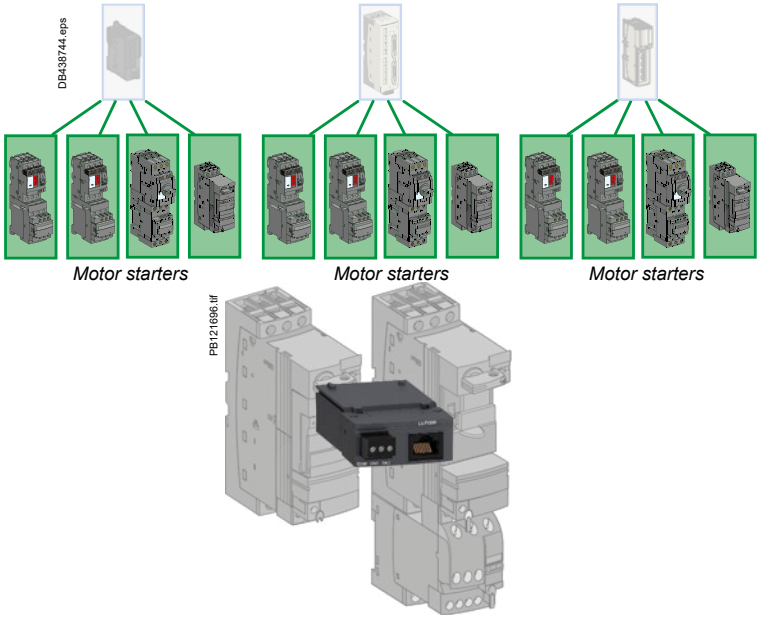

Connection module: ensures the compatibility Ultra motor starters to the RJ45 connection system
TM3XTYS4 / LU9G02 / LU9G03 / STBEPI2145K
RJ45
Ultra motor starters 12 to 38 A
Screw-clamp
Reversing or Non reversing
Plug-in module
LUFC00
B2/8

Description

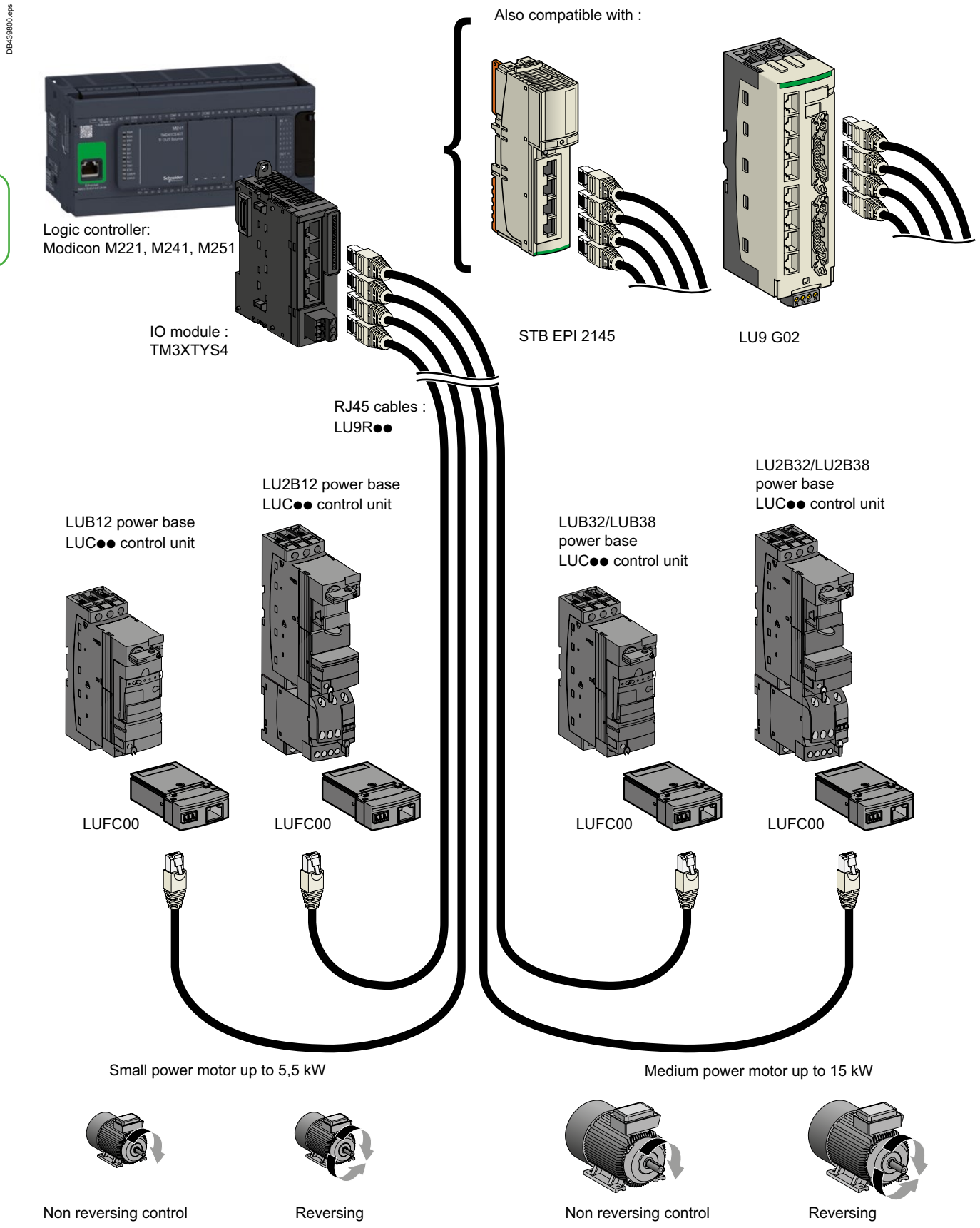

Life Is On Schneider Electric

"Plug and play", for single or reversing motor starters

The LUFC00 parallel connection module provides a simple and efficient solution for control and monitoring of a Ultra direct or reverse motor starter.

Compact, fast cabling

The connection to the Ultra power base is simply achieved by insertion of the module into it. The status and control signals are carried by a simple pre-connectorized RJ45 cable (LU9R●●) between an IO module or splitter box and Ultra motor starter.

Features

■ On / OFF / Reverse control (functions non provided with LUB12, 32, 38 power bases).
■ Handle position, power contacts position monitoring (function provided with all power bases).

Compatibility

12, 32 or 38 A direct motor starters: LUB12, LUB32 or LUB38 power base + LUC●● control unit (coil code BL),
LUB120, LUB320 or LUB380 power base + LU9N11C connector + LUC●● control unit (coil code BL)

12, 32 or 38 A reversing motor starters: LU2B12, LU2B32 or LU2B38 power base + LU9MRC connector + LUC●● control unit (coil code BL).

PB121285.eps

LUFC00

PB121287.eps

LU9MRC

PB121286.eps

LU9BN11C

Ultra RJ45 connection module	
Designation	**Commercial ref**
1 Parallel wiring module	**LUFC00**

Ultra coil connector	
Designation	**Commercial ref**
2 Pre wired coil connector for LUB120, LUB320 or LUB380 power base	**LU9BN11C**
3 Pre wired coil connector for LU2B12, LU2B32 or LU2B38 power base	**LU9MRC**

Design / Installation

The LUFC00 parallel (RJ45) connection module acts as a connection interface for controlling the coil (except with LUB12, 32, 38) and the monitoring of the auxiliary contacts. As a necessary complement, a pre wired connector is needed for carrying the signal to the coil and collecting:
■ the status of the protection device (OK / Alarm) with LU9BN11C,
■ the electrical interlock contacts with LU9MRC.
As the "reversing" is higher than the "direct" power base, the LU9MRC link is longer than the LU9BN11C.

DF566964.eps

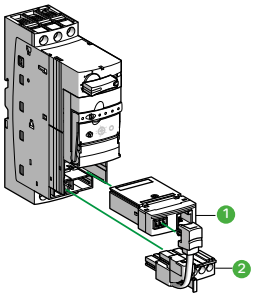

Direct motor starter (LUB120, 320, 380 power base).

DF510918.eps

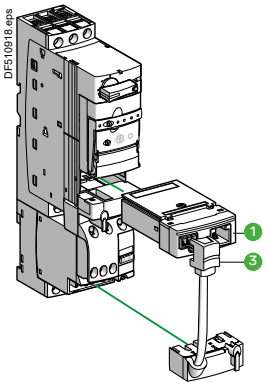

Reversing motor starter (LU2B12, 32, 38 power base).

Product references

GV1F03	GV2GH7
GV1G02	LA9D92
GV1G09	LA9E07
GV1G10	LAD311
GV2AF01	LAD322
GV2AF02	LAD324
GV2AF3	LAD331
GV2AF4	LAD341
GV2AF5	LAD351
GV2G05	LAD352
GV2G245	LAD3B1
GV2G254	LU9BN11C
GV2G272	LU9G02
GV2G345	LU9G03
GV2G354	LUFC00
GV2G445	STBEPI2145K
GV2G454	TM3XTYS4
GV2G472	
GV2G554	

This document is current. Click on the product reference to get the most recent availability status (hyperlink to **se.com** product datasheet).
If your product variant is no longer available, please consult your distributor or regional sales office.

Life Is On Schneider Electric

Technical Data for Designers

Contents

Power wiring systems for motor starter assemblies:
> Dimensions (GV2 + LAD311 assembly).....B2/12
> Dimensions (GV2G●●● busbars) B2/13

IO module, splitter box, for motor starters control circuits
> Dimensions B2/14

Dimensions

GV2AF4 + LAD311

Combination GV2ME + Deca contactor

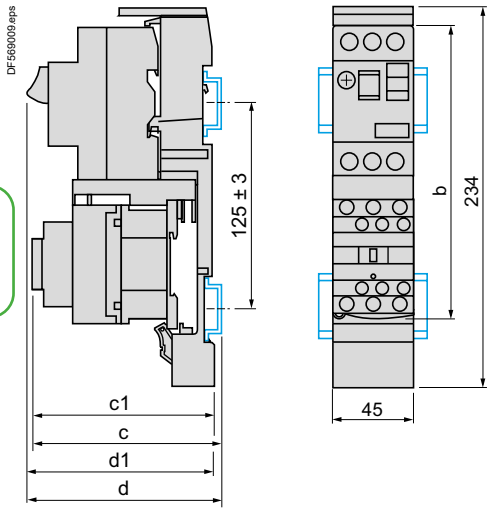

GV2ME +	LC1D09…D18	LC1D25 and D32
b	176.4	186.8
c1	103.1	136.4
c	135.6	141.9
d1	107	107
d	112.5	112.5

7.5 mm height compensation plate GV1F03

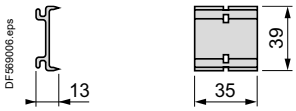

References:
page B2/5

Life Is On Schneider Electric

Dimensions

Deca Frame 2 (GV2ME, GV2P, GV2L, GV2LE)

Sets of busbars GV2G445, GV2G454, GV2G472, with terminal block GV2G05

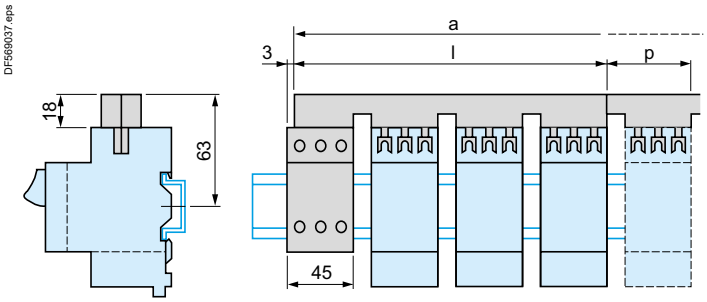

	l	p
GV2G445 (4 x 45 mm)	179	45
GV2G454 (4 x 54 mm)	206	54
GV2G472 (4 x 72 mm)	260	72

	a			
Number of tap-offs	**5**	**6**	**7**	**8**
GV2G445	224	269	314	359
GV2G454	260	314	368	422
GV2G472	332	404	476	548

Sets of busbars GV2G●●● with terminal block GV1G09

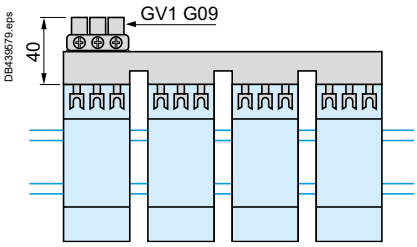

Sets of busbars GV2G245, GV2G254, GV2G272

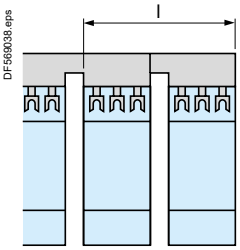

	l
GV2G245 (2 x 45 mm)	89
GV2G254 (2 x 54 mm)	98
GV2G272 (2 x 72 mm)	116

Sets of busbars GV2G554

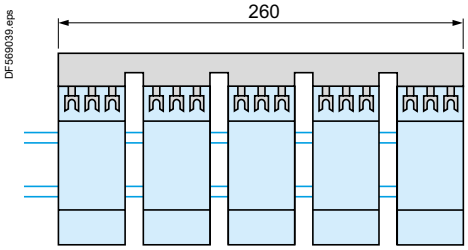

Sets of busbars GV2G345 and GV2G354

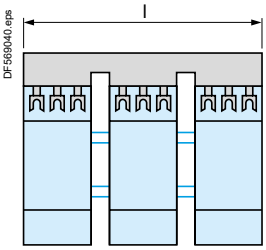

	l
GV2G345 (3 x 45 mm)	134
GV2G354 (3 x 54 mm)	152

References:
page B2/3

Dimensions

Parallel RJ45 wiring modules

Splitter box LU9G02

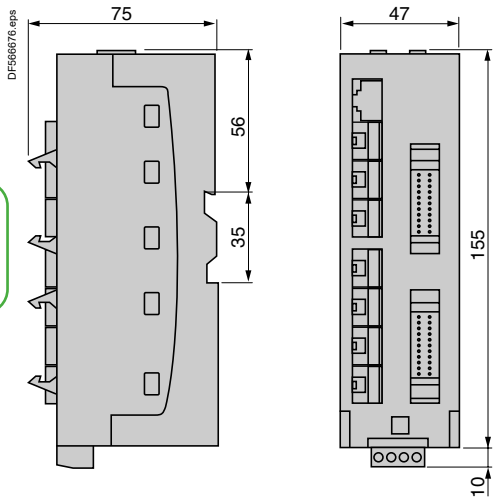

Parallel wiring module Advantys STBEPI2145

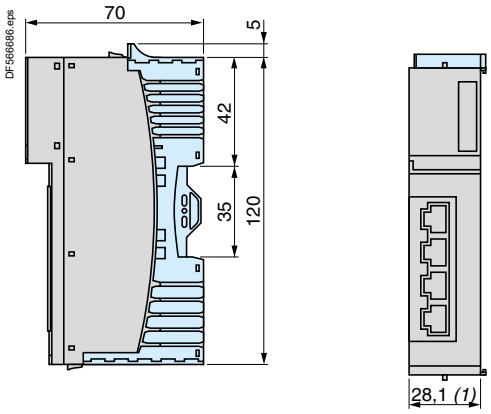

*(1) Dimension to be multiplied by the number of **STBEPI2145** modules present in the configuration.*

Life Is On Schneider Electric

TeSys Control
Switch-disconnectors

Door mounting isolation switch

Type of product	Range		Pages
Switch-disconnectors	Up to 12 or 20 A		B3/2
Switch-disconnectors, high performance applications	From 12 to 175 A		B3/6
Accessories for switch-disconnectors			B3/8

Technical Data for Designers B3/17

PB121292.eps

VCDN20

PB121293.eps

VCCDN20

PB119284.eps

VBDN20

Switch-disconnectors for standard applications

- 3-pole rotary switch-disconnectors, 12 to 20 A
- Marking on operator ○|.
- Padlockable operating handle (padlocks not supplied).
- Degree of protection IP 65.

Main and Emergency stop switch-disconnectors for door mounting

Operator			Ith	Reference
Handle	Front plate	Fixing		
	mm	mm	A	
Red, padlockable with up to 3 padlocks (Ø4 to Ø8)	Yellow 60 x 60	Ø22.5	12	**VCDN12**
			20	**VCDN20**

Main and Emergency stop switch-disconnectors for mounting at back of an enclosure (1)

Operator			Ith	Reference
Handle	Front plate	Fixing		
	mm	mm	A	
Red, padlockable with up to 3 padlocks (Ø4 to Ø8)	Yellow 60 x 60	Ø22.5	12	**VCCDN12**
			20	**VCCDN20**

Main switch-disconnectors for door mounting

Operator			Ith	Reference
Handle	Front plate	Fixing		
	mm	mm	A	
Black, padlockable with up to 3 padlocks (Ø4 to Ø8)	Black 60 x 60	Ø22.5	12	**VBDN12**
			20	**VBDN20**

(1) Switches supplied with a shaft extension **VZN17** *and a door interlock plate* **KZ32** *(see page B3/5).*

Characteristics:
pages B3/18 to B3/21

Dimensions:
pages B3/22 and B3/23

Schemes:
page B3/23

Life Is On Schneider Electric

812801.tif

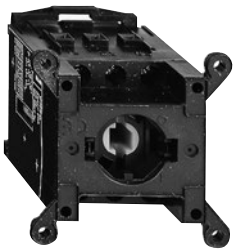

VN20

580586.tif

VZN11

580587.tif

VZN14

580588.tif

VZN05

812805.tif

VZN26

812806.tif

VZN08

Switch-disconnectors for standard applications

Switch bodies

Description	Rating A	Reference
3-pole switch-disconnectors	12	**VN12**
	20	**VN20**

Add-on modules

Description	Rating A	Reference
Main pole modules	12	**VZN12**
	20	**VZN20**
Neutral pole module with early make and late break contacts	12 and 20	**VZN11**
Earthing module	12 and 20	**VZN14**
Auxiliary contact block modules	1 N/O late make contact	**VZN05**
	1 N/C early break contact	**VZN06**
Input terminal protection shrouds	For add-on pole modules or auxiliary contact block modules (single-pole shroud)	**VZN26**
	For switch bodies (3-pole shroud)	**VZN08**

Maximum number of add-on modules that can be fitted on a switch body

VZN12 or VZN20	+	**VN12**	+	VZN12 or VZN20
				or
or		**or**		VZN11 + VZN14
		VN20		or
VZN05 or VZN06				VZN05 or VZN06

Characteristics:
pages B3/18 to B3/21

Dimensions:
pages B3/22 and B3/23

Schemes:
page B3/23

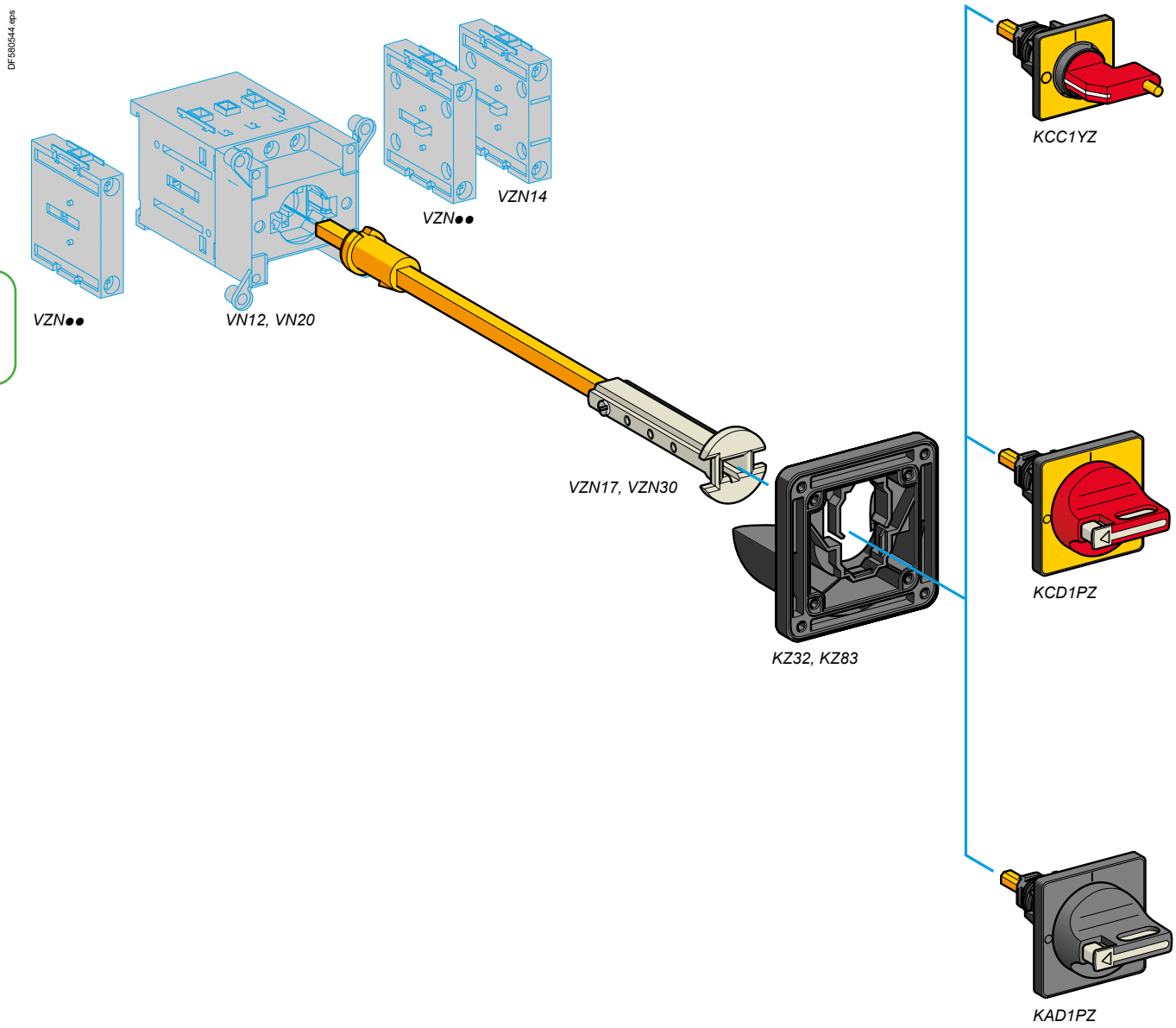

Life Is On Schneider Electric

Switch-disconnectors for standard applications

- Degree of protection IP 65.
- Marking on operator ○ ▟.
- Padlockable operating handle (padlocks not supplied).
- Operator fixing by 1 Ø22.5 hole; for other operators see pages B3/11 and B3/13.
- For other accessories and empty enclosures, see pages B3/14, B3/15 and chapter A1.

Operators for main and Emergency stop switch-disconnectors

Handle	Front plate mm	Reference
Red, padlockable with 1 padlock (Ø4 to Ø6)	Yellow 45 x 45	**KCC1YZ**
Red, padlockable with up to 3 padlocks (Ø4 to Ø8)	Yellow 60 x 60	**KCD1PZ**

Operators for main switch-disconnectors

Handle	Front plate mm	Reference
Black, padlockable with up to 3 padlocks (Ø4 to Ø8)	Black 60 x 60	**KAD1PZ**

Accessories for door interlocking

For rear fixing switch-disconnectors mounted at the back of an enclosure, in addition to a direct operator

Description	Front plate	Distance enclosure back/door	Sold in lots of	Unit reference
	mm	mm		
Shaft extensions	–	300…330	1	**VZN17**
		400…430	1	**VZN30**
Door interlock plate	45 x 45 or 60 x 60	–	5	**KZ32**
Plate for door mounting	45 x 45 or 60 x 60	–	5	**KZ83**

Characteristics: pages B3/18 to B3/21
Dimensions: pages B3/22 and B3/23
Schemes: page B3/23

PB121294.eps

VCF0

PB121295.eps

VCF5

PB121296.eps

VCCF0

Switch-disconnectors for high performance applications

- 3-pole rotary switch-disconnectors, 12 to 175 A
- Marking on operator ○┘.
- Padlockable operating handle (padlocks not supplied).
- Degree of protection IP 65.

Main and Emergency stop switch-disconnectors for door mounting

Handle	Front plate mm	Fixing	Rating A	Reference	Weight kg
Red, padlockable with up to 3 padlocks (Ø4 to Ø8)	Yellow 60 x 60	Ø22.5	12	**VCD02**	0.215
			20	**VCD01**	0.215
			25	**VCD0**	0.215
			32	**VCD1**	0.215
			40	**VCD2**	0.215
		4 screws	12	**VCF02**	0.250
			20	**VCF01**	0.250
			25	**VCF0**	0.250
			32	**VCF1**	0.250
			40	**VCF2**	0.250
			63	**VCF3**	0.560
			80	**VCF4**	0.560
Red, long, padlockable with up to 3 padlocks (Ø4 to Ø8)	Yellow 90 x 90	4 screws	125	**VCF5**	1.200
			175	**VCF6**	1.200

Main and Emergency stop switch-disconnectors for mounting at back of an enclosure (1)

Handle	Front plate mm	Fixing	Rating A	Reference	Weight kg
Red, padlockable with up to 3 padlocks (Ø4 to Ø8)	Yellow 60 x 60	Ø22.5	12	**VCCD02**	0.392
			20	**VCCD01**	0.392
			25	**VCCD0**	0.392
			32	**VCCD1**	0.392
			40	**VCCD2**	0.392
		4 screws	12	**VCCF02**	0.527
			20	**VCCF01**	0.527
			25	**VCCF0**	0.527
			32	**VCCF1**	0.527
			40	**VCCF2**	0.527
			63	**VCCF3**	0.440
			80	**VCCF4**	0.680
Red, long, padlockable with up to 3 padlocks (Ø4 to Ø8)	Yellow 90 x 90	4 screws	125	**VCCF5**	1.320
			175	**VCCF6**	1.320

*(1) Unit supplied with a shaft extension **VZN17** or **VZ18** and a door interlock plate **KZ32** or **KZ74** (see page B3/14).*

Characteristics: pages B3/18 to B3/21
Dimensions: pages B3/24 and B3/25
Schemes: page B3/25

Switch-disconnectors for high performance applications

- 3-pole rotary switch-disconnectors, 12 to 175 A
- Marking on operator ○┘.
- Padlockable operating handle (padlocks not supplied).
- Degree of protection IP 65.

PB121515.eps

VBD01

PB119275.eps

VBF4

PB121298.eps

VVE1

Main switch-disconnectors for door mounting

Handle	Front plate mm	Fixing	Rating A	Reference	Weight kg
Black, padlockable with up to 3 padlocks (Ø4 to Ø8)	Black 60 x 60	Ø22.5	12	**VBD02**	0.215
			20	**VBD01**	0.215
			25	**VBD0**	0.215
			32	**VBD1**	0.215
			40	**VBD2**	0.215
		4 screws	12	**VBF02**	0.250
			20	**VBF01**	0.250
			25	**VBF0**	0.250
			32	**VBF1**	0.250
			40	**VBF2**	0.250
			63	**VBF3**	0.560
			80	**VBF4**	0.560
Black, long, padlockable with up to 3 padlocks (Ø4 to Ø8)	Black 90 x 90	4 screws	125	**VBF5**	1.200
			175	**VBF6**	1.200

Main and Emergency stop switch-disconnectors

For mounting in an enclosure or for modular distribution boards

Handle	Front plate mm	Fixing	Rating A	Reference	Weight kg
Red, padlockable with 1 padlock (Ø4 to Ø6)	Yellow 45 x 45	4 screws	25	**VVE0**	0.250
			32	**VVE1**	0.250
			40	**VVE2**	0.250
			63	**VVE3**	0.530
			80	**VVE4**	0.530

Main switch-disconnectors

For mounting in an enclosure or for modular distribution boards

Handle	Front plate mm	Fixing	Rating A	Reference	Weight kg
Black, not padlockable	Black 45 x 45	4 screws	25	**VVD0**	0.250
			32	**VVD1**	0.250
			40	**VVD2**	0.250
			63	**VVD3**	0.560
			80	**VVD4**	0.560

Characteristics: pages B3/18 to B3/21
Dimensions: pages B3/24 and B3/25
Schemes: page B3/25

PB121299.eps

V5

580537.tif

VZ0

580538.tif

VZ11

580539.tif

VZ15

580540.tif

VZ20

Switch-disconnectors for high performance applications

Switch bodies

Description	Rating A	Reference
3-pole switch-disconnectors (1)	12	**V02**
	20	**V01**
	25	**V0**
	32	**V1**
	40	**V2**
	63	**V3**
	80	**V4**
	125	**V5**
	175	**V6**

Add-on modules

Description	Rating A	Reference
Main pole modules	12	**VZ02**
	20	**VZ01**
	25	**VZ0**
	32	**VZ1**
	40	**VZ2**
	63	**VZ3**
	80	**VZ4**
Neutral pole modules with early make and late break contacts (1)	12 to 40	**VZ11**
	63 to 80	**VZ12**
	125 and 175	**VZ13**
Earthing modules	12 to 40	**VZ14**
	63 and 80	**VZ15**
	125 and 175	**VZ16**

Auxiliary contact block modules

Description	Type	Reference
Auxiliary contact block modules with 2 auxiliary contacts	N/O + N/C (2)	**VZ7**
	N/O + N/O	**VZ20**

(1) Protection shrouds are available if required: see page B3/14.
(2) Late make N/O, early break N/C contacts

Characteristics: pages B3/18 to B3/21
Dimensions: pages B3/24 and B3/25
Schemes: page B3/25

Switch-disconnectors for high performance applications

Maximum number of add-on modules that can be fitted on a switch body

1 add-on module on each side of the switch body

VZ7 or VZ20	+	**V0●**	+	VZ7 or VZ20	VZ7	+	**V5**	+	VZ7
or				or	or				or
VZ11 or VZ12	+	**V0**	+	VZ11 or VZ12	VZ20	+		+	VZ20
or		**to**		or	or		**or**		or
VZ14 or VZ15	+		+	VZ14 or VZ15	VZ13	+		+	VZ13
or		**V4**		or	or		**V6**		or
VZ0●/VZ0 to VZ4	+		+	VZ0●/VZ0 to VZ4	VZ16	+		+	VZ16

2 add-on modules on each side of the switch body

VZ0●	+	VZ0●	+	**V0●**	+	VZ0●	+	VZ7	or	VZ20	or	VZ11	or	VZ14
VZ0	+	VZ0	+	**V0**	+	VZ0	+	VZ7	or	VZ20	or	VZ11	or	VZ14
VZ1	+	VZ1	+	**V1**	+	VZ1	+	VZ7	or	VZ20	or	VZ11	or	VZ14
VZ2	+	VZ2	+	**V2**	+	VZ2	+	VZ7	or	VZ20	or	VZ11	or	VZ14
VZ3	+	VZ3	+	**V3**	+	VZ3	+	VZ7	or	VZ20	or	VZ12	or	VZ15
VZ4	+	VZ4	+	**V4**	+	VZ4	+	VZ7	or	VZ20	or	VZ12	or	VZ15

Note: *The add-on modules mounted next to the switch body are main pole modules. Maximum of 3 main pole modules per switch body.*

Auxiliary switch switching angles

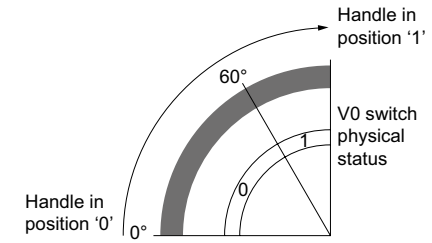

Switching angle representation - example with V0 switch

0: contact open 1: contact close

Handle travel 0 > 1		0°	30°	60°	90°
3-pole switch-disconnectors V02 / V01 / V0 / V1 / V2 / V3 / V4 / V5 / V6		60°			
		0		1	
Main pole modules VZ02 / VZ01 / VZ0 / VZ1 / VZ2 / VZ3 / VZ4		60°			
		0		1	
Neutral pole modules with early make and late break contacts VZ11 / VZ12 / VZ13		45°			
		0		1	
Auxiliary contact block modules with 2 auxiliary contacts (N/0+N/C) VZ7 Late make N0 and earlier break NC (Early break N0 and late make NC for travel 1-0)		75°			
	N/0	0		1	
	N/C	1	0		
		20°			
Auxiliary contact block modules with 2 auxiliary contacts (N/0+N/C) VZ20		60°			
		0		1	
		0		1	
		60°			

Characteristics: pages B3/18 to B3/21
Dimensions: pages B3/24 and B3/25
Schemes: page B3/25

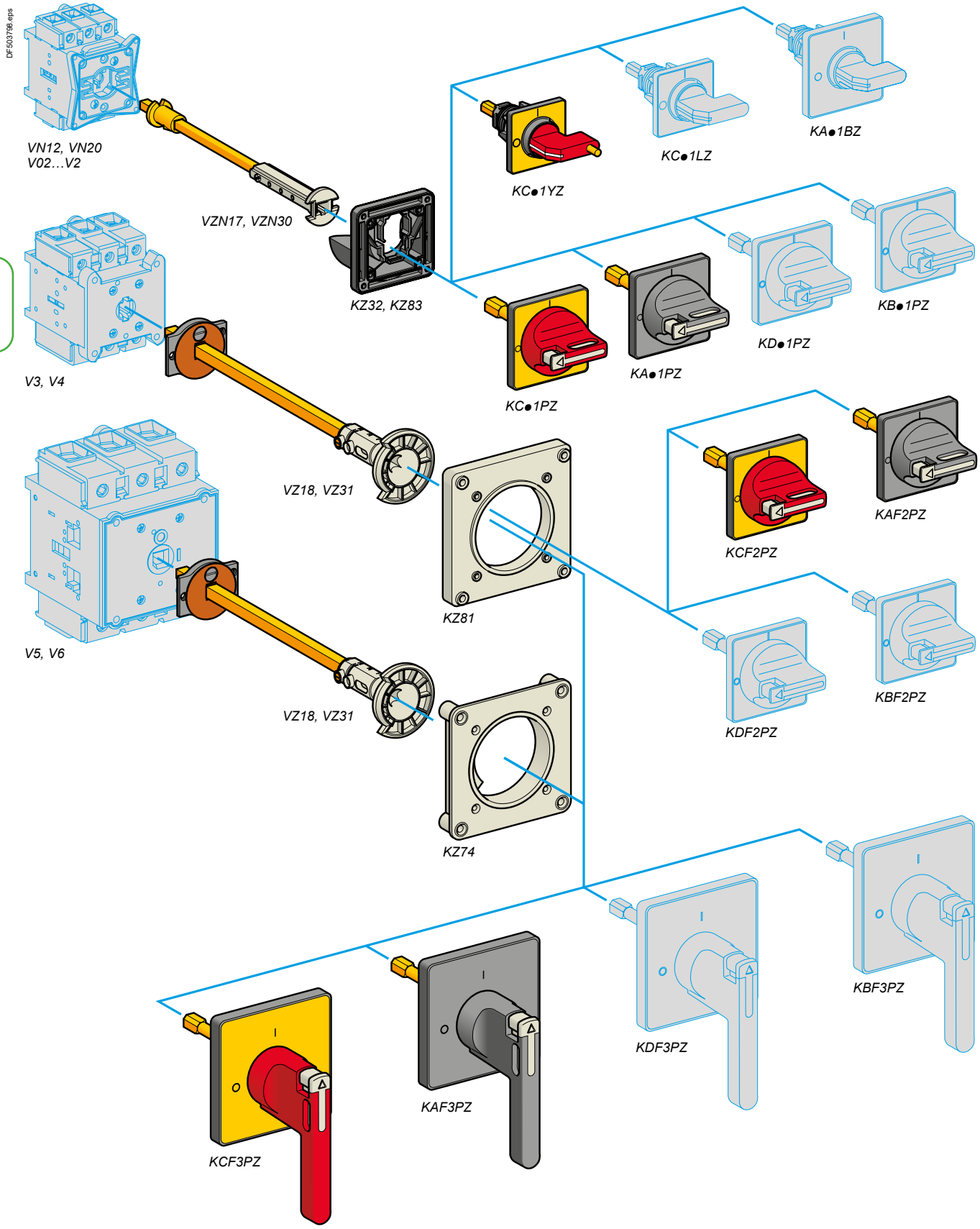

Life Is On Schneider Electric

- Marking on operator O I.
- Padlockable operating handle (padlocks not supplied).
- Degree of protection IP 65.

Handles and front plates for main and Emergency stop switch-disconnectors

For switch body	Operator			Reference
	Handle	Front plate		
		Dimensions	Fixing	
		mm		
VN12, VN20 V02…V2	Red, padlockable with 1 padlock (Ø4 to Ø6)	Yellow 45 x 45	Ø22.5	**KCC1YZ**
			4 screws	**KCE1YZ**
	Red, padlockable with up to 3 padlocks (Ø4 to Ø8)	Yellow 60 x 60	Ø22.5	**KCD1PZ**
			4 screws	**KCF1PZ**
V3 and V4	Red, padlockable with up to 3 padlocks (Ø4 to Ø8)	Yellow 60 x 60	4 screws	**KCF2PZ**
V5 and V6	Red, long, padlockable with up to 3 padlocks (Ø4 to Ø8)	Yellow 90 x 90	4 screws	**KCF3PZ** (1)

Handles and front plates for main switch-disconnectors

For switch body	Operator			Reference
	Handle	Front plate		
		Dimensions	Fixing	
		mm		
VN12, VN20 V02…V2	Black, padlockable with up to 3 padlocks (Ø4 to Ø8)	Black 60 x 60	Ø22.5	**KAD1PZ**
			4 screws	**KAF1PZ**
V3 and V4	Black, padlockable with up to 3 padlocks (Ø4 to Ø8)	Black 60 x 60	4 screws	**KAF2PZ**
V5 and V6	Black, long, padlockable with up to 3 padlocks (Ø4 to Ø8)	Black 90 x 90	4 screws	**KAF3PZ** (1)

*(1) For door mounting of 63 and 80 A switch-disconnectors, adapter plate **KZ106** must be ordered separately (see page B3/14).*

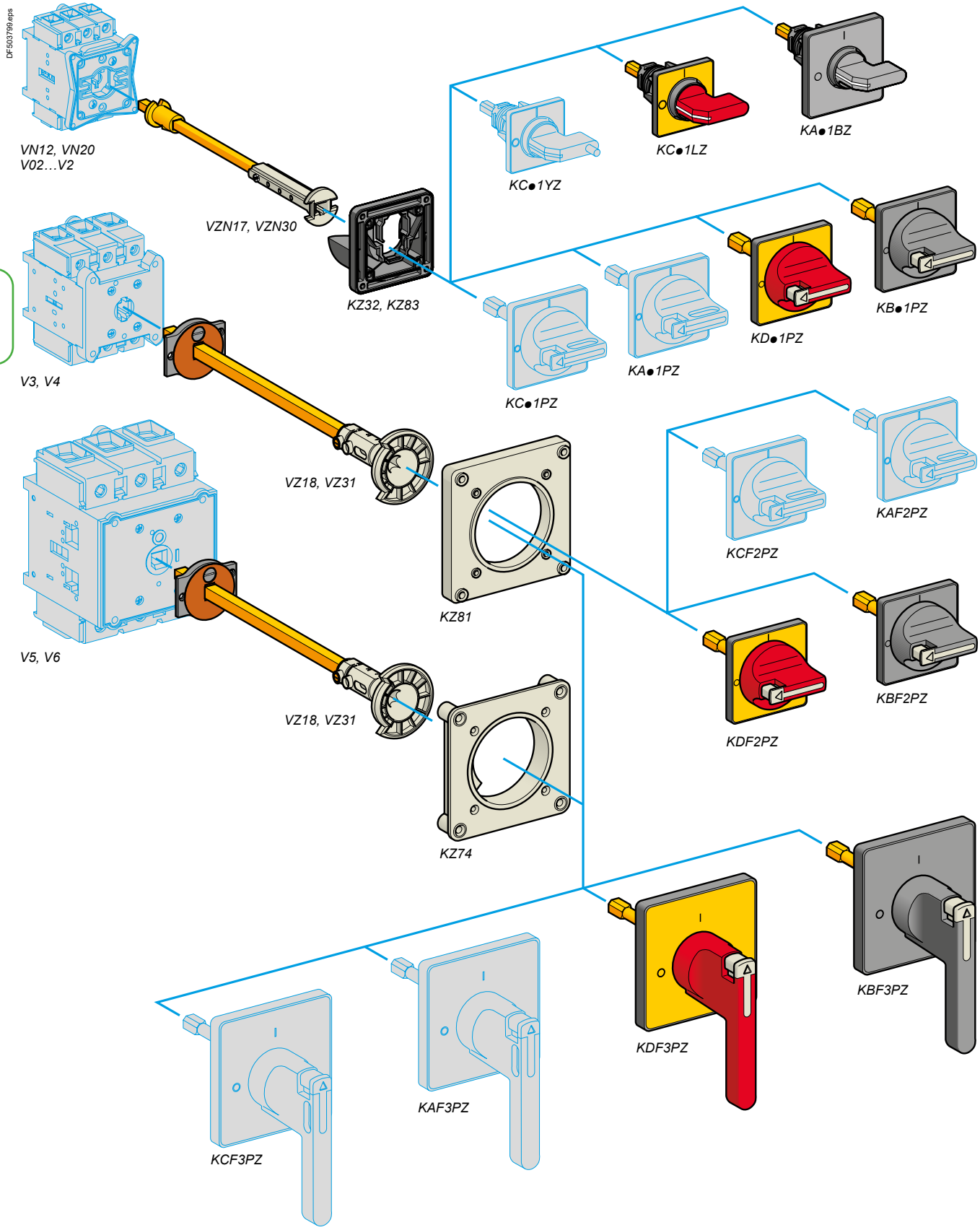

Life Is On Schneider Electric

- Marking on operator ○|.
- Degree of protection IP 65.

Handles and front plates for Emergency stop switch-disconnectors

For switch body	Operator			Reference
	Handle	Front plate		
		Dimensions	Fixing	
		mm		
VN12, VN20 V02…V2	Red, not padlockable	Yellow 45 x 45	Ø22.5	**KCC1LZ**
			4 screws	**KCE1LZ**
		Yellow 60 x 60	Ø22.5	**KDD1PZ**
			4 screws	**KDF1PZ**
V3 and V4	Red, long, not padlockable	Yellow 60 x 60	4 screws	**KDF2PZ**
V5 and V6	Red, long, not padlockable	Yellow 90 x 90	4 screws	**KDF3PZ** (1)

Handles and front plates for switch-disconnectors

For switch body	Operator			Reference
	Handle	Front plate		
		Dimensions	Fixing	
		mm		
VN12, VN20 V02…V2	Black, not padlockable	Black 45 x 45	4 screws	**KAE1BZ**
		Black 60 x 60	Ø22.5	**KBD1PZ**
			4 screws	**KBF1PZ**
V3 and V4	Black, not padlockable	Black 60 x 60	4 screws	**KBF2PZ**
V5 and V6	Black, not padlockable	Black 90 x 90	4 screws	**KBF3PZ** (1)

*(1) For door mounting of 63 and 80 A switch-disconnectors, adapter plate **KZ106** must be ordered separately (see next page).*

580583.tif

VZ8

PB121516.eps

VZ26

580584.tif

VZ29

Input terminal protection shrouds

Description	For use on	Reference
For switch bodies (3-pole shroud)	V02…V2	**VZ8**
	V3 and V4	**VZ9**
	V5 and V6	**VZ10**
For add-on pole modules (single-pole shroud)	VZ02…VZ2, VZ11, VZ14	**VZ26**
	VZ3, VZ4, VZ12, VZ15	**VZ27**
	VZ13, VZ16	**VZ28**
For contact blocks with 2 auxiliary contacts	–	**VZ29**

Components for door interlocking

For rear fixing switch-disconnectors mounted at the back of an enclosure, in addition to a direct operator

Description	For use on	Distance enc. back/door	Sold in lots of	Unit reference
		mm		
Shaft extensions	VN12, VN20 V02…V2	300…330	1	**VZN17** (1)
		400…430	1	**VZN30** (1)
	V02…V2	300…330	1	**VZ17**
		400…430	1	**VZ30**
	V3 and V4	300…320	1	**VZ18**
		400…420	1	**VZ31**
	V5 and V6	330…350	1	**VZ18**
		430…450	1	**VZ31**
Door interlock plates	VN12, VN20 V02…V2	–	5	**KZ32**
	V3…V6	–	5	**KZ74**

Description	For use on	Front plate dimensions	Sold in lots of	Unit reference
		mm		
Plates for door mounting of handles with 4 screw fixing	VN12, VN20 V02…V2	45 x 45 or 60 x 60	5	**KZ83**
	V3…V6	60 x 60 or 90 x 90	5	**KZ81**
Adapter plate for switch-disconnectors	V3 and V4	90 x 90	5	**KZ106**

(1) Can be used with V02 to V2 switches.

PB121517.eps

VZ31

580585.tif

KZ32

PB121518.eps

KZ81

Characteristics:
pages B3/18 to B3/21

Dimensions:
pages B3/24 and B3/25

Schemes:
page B3/25

Life Is On Schneider Electric

Product references

PB121519.eps

KZ15

PB121520.eps

KZ67

PB121521.eps

Z01

Accessories for operators

Description	For use on	Front plate dimensions	Sold in lots of	Unit reference
		mm		
Legend holder with silver coloured blank legend plate	Front plate	45 x 45	5	**KZ13**
		60 x 60	5	**KZ15**
		90 x 90	5	**KZ103**
Legend holders without legend plate	Front plate	45 x 45	20	**KZ14**
		60 x 60	10	**KZ16**
		90 x 90	5	**KZ101**
Silver coloured blank legend plates for engraving by customer	KZ16	–	10	**KZ77**
Seals	VN12, VN20	45 x 45	5	**KZ65**
	V02…V2	60 x 60	5	**KZ66**
	V3 and V4	60 x 60	5	**KZ62**
	V3…V6	90 x 90	5	**KZ67**
Tightening tool	For operators with Ø22.5 fixing	–	5	**Z01**

Characteristics:
pages B3/18 to B3/21

Dimensions:
pages B3/24 and B3/25

Schemes:
page B3/25

Product references

KAD1PZ	VBF4GE	VCFN20GE
KAD1XZ	VBF5	VCFN25GE
KAE1BZ	VBF5GEN	VCFN32GE
KAF1PZ	VBF6	VCFN40GE
KAF2PZ	VBF6GEN	VCFXGE1
KAF2XZ	VBFXGE1	VCFXGE2
KAF3PZ	VBFXGE2	VCFXGE4
KBD1PZ	VBFXGE4	VCFXGE6
KBF1PZ	VBFXGE6	VGP1
KBF2PZ	VC1GUN	VGPCLIP1
KBF3PZ	VC2GUN	VN12
KCC1LZ	VC3GUN	VN20
KCC1YZ	VC4GUN	VVD0
KCD1PZ	VC5GUN	VVD1
KCD1YZ	VC6GUN	VVD2
KCE1LZ	VCCD0	VVD3
KCE1YZ	VCCD01	VVD4
KCF1PZ	VCCD02	VVE0
KCF1YZ	VCCD1	VVE1
KCF2PZ	VCCD2	VVE2
KCF2YZ	VCCDN12	VVE3
KCF3PZ	VCCDN20	VVE4
KCG2YZ	VCCF0	VZ0
KDD1PZ	VCCF01	VZ01
KDF1PZ	VCCF02	VZ02
KDF2PZ	VCCF1	VZ1
KDF3PZ	VCCF2	VZ10
KZ32	VCCF3	VZ11
KZ74	VCCF4	VZ12
KZ80	VCCF5	VZ13
KZ81	VCCF6	VZ14
KZ82	VCD0	VZ15
KZ83	VCD01	VZ16
V0	VCD02	VZ17
V01	VCD1	VZ17L127
V02	VCD2	VZ17L69
V1	VCDN12	VZ18
V2	VCDN20	VZ2
V3	VCF0	VZ20
V4	VCF01	VZ26
V5	VCF01GE	VZ27
V6	VCF01GEGP	VZ28
VBD0	VCF02	VZ29
VBD01	VCF02GE	VZ3
VBD02	VCF02GEGP	VZ30
VBD1	VCF0GE	VZ31
VBD2	VCF0GEGP	VZ4
VBDN12	VCF1	VZ45
VBDN20	VCF1GE	VZ7
VBF0	VCF1GEGP	VZ8
VBF01	VCF1YZ	VZ9
VBF01GE	VCF2	VZN05
VBF02	VCF2GE	VZN06
VBF02GE	VCF3	VZN08
VBF0GE	VCF3GE	VZN11
VBF1	VCF4	VZN12
VBF1GE	VCF4GE	VZN14
VBF2	VCF5	VZN17
VBF2GE	VCF5GEN	VZN19
VBF3	VCF6	VZN20
VBF3GE	VCF6GEN	VZN26
VBF4	VCFN12GE	VZN30

This document is current. Click on the product reference to get the most recent availability status (hyperlink to **se.com** product datasheet).
If your product variant is no longer available, please consult your distributor or regional sales office.

Life Is On Schneider Electric

Technical Data for Designers

Contents

Characteristics ..... B3/18 to B3/21
Switch-disconnectors for standard applications:
> Dimensions ..... B3/22 to B3/23
> Schemes B3/23
Switch-disconnectors for high performance applications:
> Dimensions ..... B3/24 to B3/25
> Schemes B3/25

Characteristics

Environment

Switch type (bare type)		VN12 VZN12	V02 VZ02	VN20 VZN20	V01 VZ01	V0 VZ0	VVD0 VVE0	V1 VZ1	VVD1 VVE1
Conforming to standards		IEC/EN 60947-3 and UL/CSA 60947-4-1							
Product certifications		UL, CSA, UKCA	UL, CSA, DNV-GL, CCC, IEC, UKCA	UL, CSA, UKCA	UL, CSA, DNV-GL, IEC, EAC, CCC (1), UKCA				
Degree of protection with protection shroud		IP 20 conforming to IEC 60529							
Ambient air temperature	**° C**	-20…+50							
Flame resistance	**° C**	960 conforming to IEC 60695-2-11							
Shock resistance 1/2 sine wave = 11ms conforming to IEC60068-2-27	**gn**	15	30	15	30				
Vibration resistance 10…150 Hz conforming to IEC 60068-2-6	**gn**	5	1						

Electrical characteristics, a.c. operation

Switch type (bare type)				VN12 VZN12	V02 VZ02	VN20 VZN20	V01 VZ01	V0 VZ0	VVD0 VVE0	V1 VZ1	VVD1 VVE1
Rated operational voltage (Ue)			**V**	690							
Rated impulse withstand voltage (Uimp)			**kV**	6	8	6	8				
Conventional thermal currents in free air (Ith) and rated uninterrupted (Iu)			**A**	12		20		25		32	
Conventional thermal current in enclosure (Ithe)			**A**	10		16		20		25	
Power dissipation per pole for the above operational currents	AC-23A		**W**	–				1.25		2	
	AC-21A		**W**	–				3.2		5	
Rated operational power and current	AC-21A/22A	230…690 V	**A**	12		20		25		32	
	AC-23A	230 V	**A/kW**	10.6/3		14/4		19.7/5.5			
		240 V	**A/kW**	10.6/3		14/4		19.9/5.5		18.9/5.5	
		400 V	**A/kW**	8.1/4		11/5.5		14.5/7.5		21.8/11	
		415 V	**A/kW**	8.1/4		11/5.5		14/7.5		21/11	
		500 V	**A/kW**	8.9/5.5		11.9/7.5		16.7/11			
		690 V	**A/kW**	8.6/7.5		12.3/11		17.5/15			
Rated operational power	AC -3	230/240 V	**kW**	1.5		3		4			
		400/415 V	**kW**	3		4		5.5		7.5	
		500 V	**kW**	4		5.5		7.5			
		690 V	**kW**	4	5.5		7.5	11			
Intermittent duty class				30							
Characteristics in normal operating conditions	Rated making capacity AC-21A/22A/23A (I rms)		**A/** 400 V	120		200		250		320	
	Rated breaking capacity AC-21A/22A/23A (I rms)		**A/** 400 V	120		200				250	
Short-circuit characteristics	Permissible rms short time rating (Icw)		**A/** 400V/1s	140	300	140	300			384	
	Rated making capacity under short-circuit conditions (Icm) I peak		**kA/** 400 V	0.5	1	0.5	1				
	Rated conditional short-circuit current (I rms) with aM/gG fuses		**kA/** 400 V	6	10	6	10				
			A	12		20		25		35	

(1) CCC: except for VVD, VVE switches.

References: page B3/3
Dimensions: page B3/22
Schemes: page B3/23

V2 VZ2	VVD2 VVE2	V3 VZ3	VVD3 VVE3	V4 VZ4	VVD4 VVE4	V5	V6	VZ7 VZ20	VZN05 VZN06
IEC/EN 60947-3 and UL/CSA 60947-4-1								IEC/EN 60947-5-1, UL/CSA 60947-5-1	
UL, CSA, DNV-GL, IEC, EAC, CCC [(1)], UKCA									
IP 20 conforming to IEC 60529									
-20…+50									
960 conforming to IEC 60695-2-11									
30								–	
1								–	

V2 VZ2	VVD2 VVE2	V3 VZ3	VVD3 VVE3	V4 VZ4	VVD4 VVE4	V5	V6	VZ7 VZ20	VZN05 VZN06
690									
8									6
40		63		80		125	175	12	12
32		50		63		100	140	10	10
2.4		4.2		5.1		7.5	11	–	
5.4		6.4		12.5		15	25	–	
40		63		80		125	160	Ie/AC-15	
25.8/7.5		50.3/15		61.2/18.5		71.9/22	96.6/30	6 A	
24.8/7.5		48.2/15		58.5/18.5		68/22	92.7/30	6 A	
29/15		41.5/22		57/30		68.5/37	83/45	4 A	
28/15		40/22		55/30		66/37	80/45	4 A	
28.5/18.5		44/30		54/37		64.5/45	79/55	2 A	
17.5/15		25/22		33/30		42/37	49/45	1 A	
5.5		11		15		22	30	–	
11		18.5		22		30	37	–	
15		22		30		37	45	–	
11		18.5				30	37	–	
30								–	
400		630		800		1250	1750	–	
320		500		640		1000	1400	–	
480		756		960		1500	2100	–	
1		2.1				2.8		–	
10								1	
50		63		80		125	200	16	16

(1) CCC: except for VVD, VVE switches.

References:
page B3/3

Dimensions:
page B3/22

Schemes:
page B3/23

Characteristics

Electrical characteristics, d.c. operation

Switch type (bare type)				VN12 VZN12	V02 VZ02	VN20 VZN20	V01 VZ01	V0 VZ0	VVD0 VVE0	V1 VZ1	VVD1 VVE1
Rated operational current DC-1 (L/R = 1ms)	24 V	1 contact	A	12		20		25		32	
		2 contacts	A	12		20		25		32	
		3 contacts	A	12		20		25		32	
	48 V	1 contact	A	12		20		25		32	
		2 contacts	A	12		20		25		32	
		3 contacts	A	12		20		25		32	
	60 V	1 contact	A	12		20		25		32	
		2 contacts	A	12		20		25		32	
		3 contacts	A	12		20		25		32	
	110 V	1 contact	A	1.5		2		9		10	
		2 contacts	A	8		10		12		16	
		3 contacts	A	12		20		25		32	
	220 V	1 contact	A	1.5		2		2.5		3	
		2 contacts	A	7		8		10		12	
		3 contacts	A	10		14		16		20	
	250 V	1 contact	A	0.6		0.7		0.8		1	
		2 contacts	A	3		4		6		8	
		3 contacts	A	8		10		12		16	
Rated operational current DC-2 to DC-5 (L/R ≤ 15ms)	24 V	1 contact	A	12		20		25		32	
		2 contacts	A	12		20		25		32	
		3 contacts	A	12		20		25		32	
	48 V	1 contact	A	12		20		25		32	
		2 contacts	A	12		20		25		32	
		3 contacts	A	12		20		25		32	
	60 V	1 contact	A	10		14		16		20	
		2 contacts	A	12		20		25		32	
		3 contacts	A	12		20		25		32	
	110 V	1 contact	A	1.5		2		2.5		3	
		2 contacts	A	3		4		5		6	
		3 contacts	A	12		20		25		32	
	220 V	1 contact	A	0.4		0.5		0.5		0.8	
		2 contacts	A	1.4		1.5		1.5		2	
		3 contacts	A	1		2		3		4	
	250 V	1 contact	A	0.3		0.4		0.5		0.8	
		2 contacts	A	0.4		0.6		0.8		1	
		3 contacts	A	1.2		2.4		1.6		2	

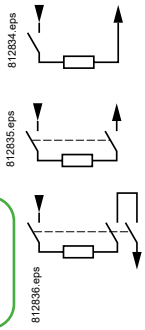

Other characteristics

Switch type (bare type)			VN12 VZN12	V02 VZ02	VN20 VZN20	V01 VZ01	V0 VZ0	VVD0 VVE0	V1 VZ1	VVD1 VVE1
Mechanical durability (millions of operating cycles)			0.05	0.1	0.05	0.1				
Electrical durability in cat. AC-21 (millions of operating cycles)			0.05	0.1	0.05	0.1				
Electrical durability in cat. DC-1 to 5 (operating cycles)			30000							
Suitable for isolation			Yes							
Cabling	Flexible cable + cable end	mm²	4	6	4	6				
	Solid cable	mm²	4	10	4	10				
Tightening torque		N.m	0.7	2.1	0.7	2.1				

References: page B3/3
Dimensions: page B3/22
Schemes: page B3/23

V2 VZ2	VVD2 VVE2	V3 VZ3	VVD3 VVE3	V4 VZ4	VVD4 VVE4	V5	V6	VZ7 VZ20	VZN05 VZN06
40		63		80		125	175	8 (Ie/DC-1)	
40		63		80		125	175	–	
40		63		80		125	175	–	
40		63		80		125	175	8 (Ie/DC-1)	
40		63		80		125	175	–	
40		63		80		125	175	–	
35		40		50		60	70	4 (Ie/DC-1)	
40		63		80		125	175	–	
40		63		80		125	175	–	
12		20		25		30	37	2 (Ie/DC-1)	
20		63		80		125	175	–	
40		63		80		125	175	–	
4		6		8		12	15	1 (Ie/DC-1)	
14		25		30		40	50	–	
25		30		40		80	100	–	
2		4		5		3	10	0.8 (Ie/DC-1)	
12		20		25		30	40	–	
20		30		40		50	61	–	
40		63		80		125	175	–	
40		63		80		125	175	–	
40		63		80		125	175	–	
40		63		80		125	175	–	
40		63		80		125	175	–	
40		63		80		125	175	–	
25		40		50		60	70	–	
40		63		80		125	175	–	
40		63		80		125	175	–	
5		6		8		10	12	–	
8		10		20		22	24	–	
40		50		63		70	80	–	
1		1.5		2		2.2	2.4	–	
3		4		6		7	8	–	
7		10		15		16	13	–	
1		1.2		1.5		1.6	1.8	–	
2		3		6		7	8	–	
6		8		10		12	14	–	

V2 VZ2	VVD2 VVE2	V3 VZ3	VVD3 VVE3	V4 VZ4	VVD4 VVE4	V5	V6	VZ7 VZ20	VZN05 VZN06
0.1		0.03						0.1	0.05
0.1		0.03						0.1 (AC-15)	0.05
30000								30000 (DC-1)	
Yes								–	
6		16				70		2 x 0.75…1.5	
10		25				95		2 x 1…2.5	
2.1		4				22.6		0.7	

References:
page B3/3

Dimensions:
page B3/22

Schemes:
page B3/23

Dimensions, mounting

Dimensions

Switch-disconnectors

Switch bodies VN12, VN20

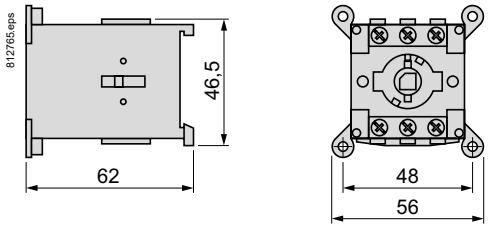

Add-on modules VZN12, VZN20

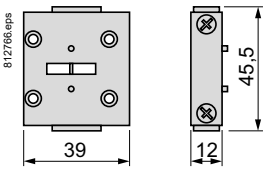

Add-on modules VZN11, VZN14 VZN05 and VZN06

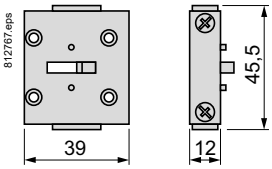

Mounting

Switch-disconnector mounted on enclosure door

VCDN12, VCDN20, VBDN12, VBDN20
Single hole fixing

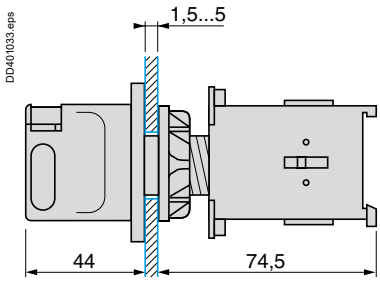

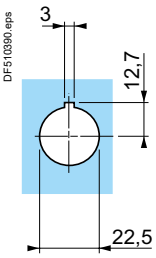

Ref.

VN12, VN20
4 screw fixing

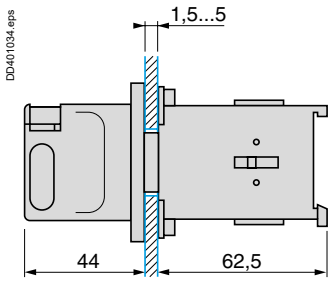

45 x 45 front plate

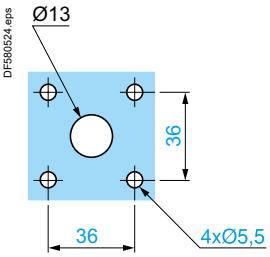

60 x 60 front plate

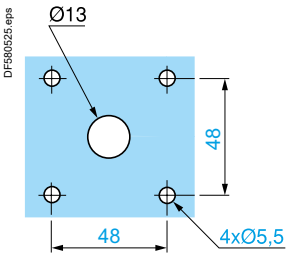

Mounting (continued)

Switch-disconnector mounted at back of enclosure with shaft extension VZN17 or VZN30 (clip-on mounting on ⊔ rail)

VN12, VN20

Single hole fixing

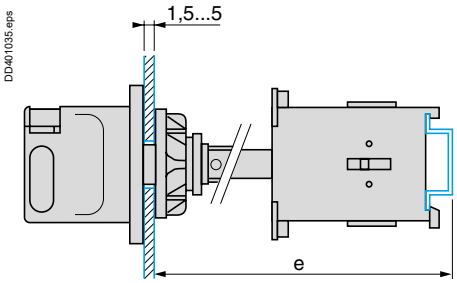

4 screw fixing

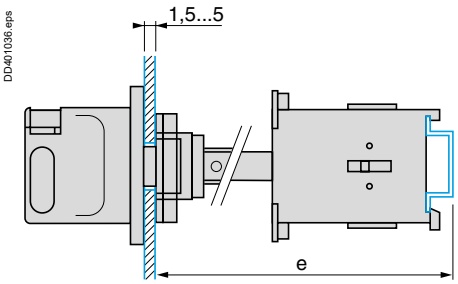

	Shaft extension	Distance (e) enclosure back/door
		mm
VN12, VN20	VZN17	300…330
	VZN30	400…430

Schemes

Switch body VN12, VN20

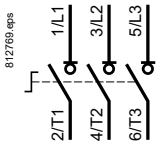

Main pole module VZN12, VZN20

Neutral pole module VZN11

Auxiliary contact blocks

VZN05

VZN06

Switch-disconnectors
Ref.

Dimensions

Switch-disconnectors

Switch bodies V0●, V0 to V2

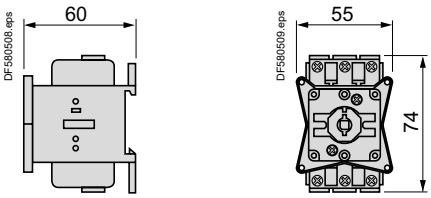

Switch bodies V3 to V6

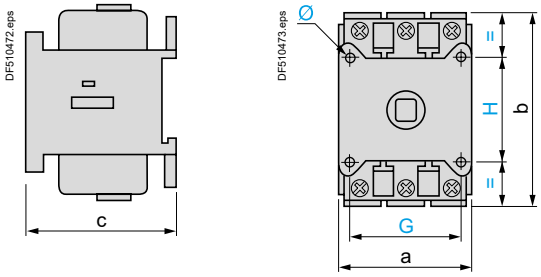

	a	b	c	G	H	Ø
V3, V4	60	83	65	48	48	3
V5, V6	90	125	90	68	68	4.5

Add-on modules VZ02 to VZ4 and VZ11 to VZ16

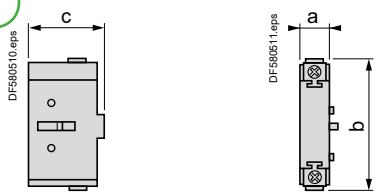

	a	b	c
VZ02 and VZ01, VZ0 to VZ2, VZ11, VZ14	16	74	35
VZ3, VZ4, VZ12, VZ15	20	83	46
VZ13, VZ16	30	125	63

Add-on modules VZ7, VZ20

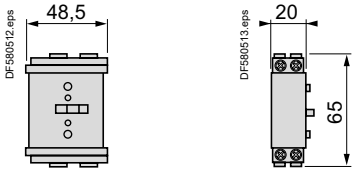

Mounting

Switch-disconnector mounted on enclosure door

Single hole fixing V0●, V0 to V2

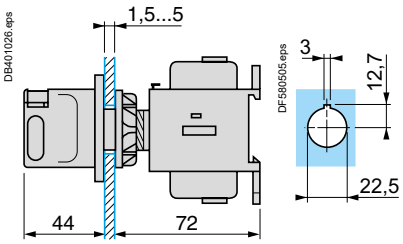

4 screw fixing V0●, V0 to V4

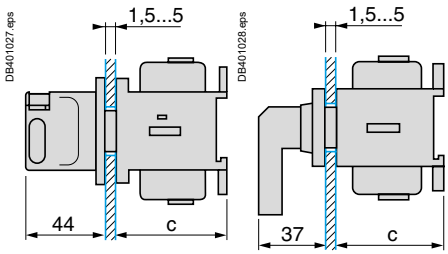

	c
V0●, V0 to V2	60
V3, V4	65

4 screw fixing 45 x 45 front plate V0●, V0 to V2

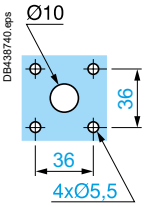

4 screw fixing 60 x 60 front plate V0●, V0 to V4

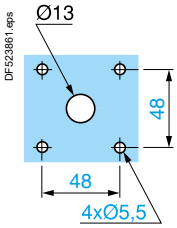

V5 and V6. 4 screw fixing

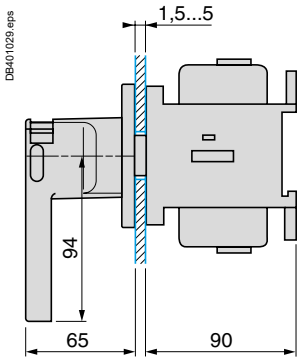

90 x 90 front plate

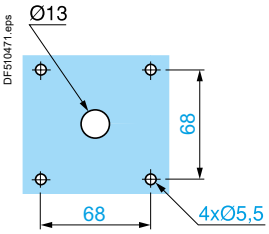

References:
pages B3/6 to B3/9

Characteristics:
pages B3/18 to B3/21

Schemes:
page B3/25

Mounting (continued)

Switch-disconnector mounted at back of enclosure

4 screw fixing
V0●, V0 to V2 with shaft extension VZ17 or VZ30 (clip-on mounting on ⊔ rail possible for V0● to V2)

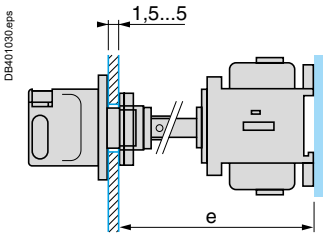

Single hole fixing
V3 to V4 with shaft extension VZ18 or VZ31

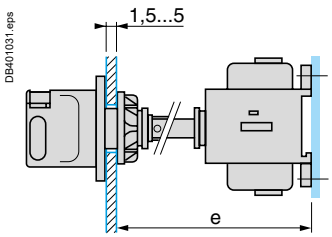

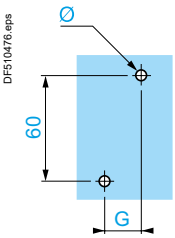

V5 and V6 with shaft extension VZ18 or VZ31

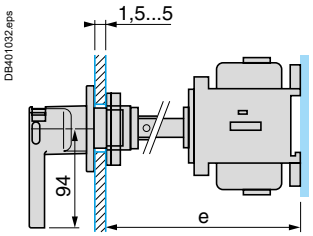

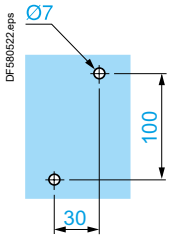

	Shaft extension	Distance (e) enc.back/door	Ø	G
		mm		
V02 and V01 V0 to V2	VZ17	300…330	2 x 4.2	15
	VZ30	400…430	2 x 4.2	15
V3 and V4	VZ18	300…320	2 x 5	20
	VZ31	400…420	2 x 5	20

	Shaft extension	Distance (e) enc. back/door
		mm
V5 and V6	VZ18	300…350
	VZ31	430…450

Switch-disconnectors for modular distribution boards

VV●0 to VV●2

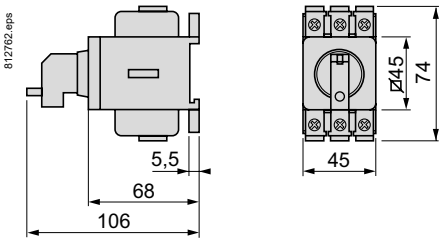

VV●3 to VV●4

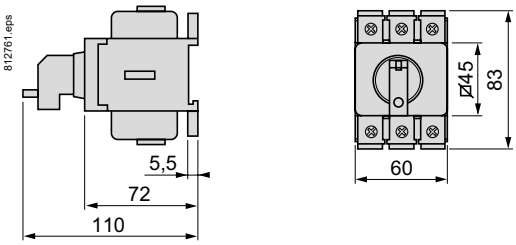

Schemes

Switch body
V02 and V01
V0 to V6

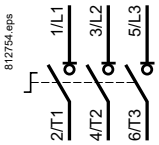

Main pole module
VZ02 and VZ01
VZ0 to VZ4

Neutral pole module
VZ11 to VZ13

Auxiliary contact blocks
VZ7

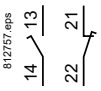

VZ20

References:
pages B3/6 to B3/9

Characteristics:
pages B3/18 to B3/21

TeSys Power
Fuse carriers

Fuse carriers

Type of product	Range		Pages
Introduction			B4/2
For protection of control circuits or transformer	Up to 25, 32, 50 or 125 A		B4/3
For protection of control circuits or transformer For North American market	Up to 30 A		B4/5
Technical Data for Designers			B4/7

Operation: safety

The fuse carrier performs two basic functions:
■ it isolates the downstream circuit by means of a visible break and wide opening contacts,
■ it holds the cartridge fuses designed to protect the installation against short-circuits.
The type of cartridge fuse needed to protect the circuit must be determined before selecting the fuse carrier.

Cartridge fuse selection (type, rating, size)

Type

Application	■ Motor protection. ■ Transformer protection.
Solution	■ **aM type** fuses. These fuses are designed to withstand high current peaks of a very short duration. They must be combined with a thermal overload relay coupled with a contactor.
Application	■ Lighting circuit protection. ■ Supply line protection. ■ Furnace protection.
Solution	■ **gG** type fuses, which are more widely used but whose limiting capacity is weaker than that of **aM** type fuses.

Size

Use the “fuse characteristics” table opposite to select the correct fuse size according to:
■ the nominal current of the circuit to be protected,
■ the operational voltage.

Fuse carrier selection

Application	**Isolation** of a circuit for safety reasons only.
Solution	The fuse carrier may be fitted with links. The maximum permissible current is indicated in the “pole characteristics” table opposite.
Application	**Isolation** of a circuit and its **protection** against short-circuits.
Solution	Select a fuse carrier according to: ■ the type of cartridge fuse required, ■ the maximum permissible current in the fuse carrier poles (see “pole characteristics” table opposite). If the operational current is greater than the maximum permissible current in the poles of the fuse carrier corresponding to the cartridge fuse size selected, select the fuse carrier the next size up. The **safety** provided by using a fuse carrier can be increased by adding a padlocking device with up to three padlocks.

Recommendations for use

The fuse carrier conforms to utilisation category AC-21A/22A of standard IEC 60947-3. It is therefore recommended that the fuse carrier early break auxiliary contacts always be inserted in the coil circuit of the contactor with which it is in series. If the fuse carrier is not associated with a contactor, it is essential to ensure that it will be operated off-load.

Product references - DF type

PB120623.eps
DF101

PB120624.eps
DF103

PB111674.eps
DF141

PB111685.eps
DF143NC

PB111673.eps
DF221

PB111670.eps
DF223NC

PB120625.eps
DF101NV

PB120626.eps
DF103V

PB111824.eps
DF141NV

PB111686.eps
DF143VC

PB111672.eps
DF221NV

PB111671.eps
DF223VC

For protection of control circuits or transformers

Fuse carriers [1]

Conventional thermal current (Ith)	Size of cartridge fuse or link	Composition	Sold in lots of	Unit reference
A	mm			
25	8.5 x 32	1 P	12	**DF81**
		N	12	**DF10N**
		2 P	6	**DF82**
		3 P	4	**DF83**
		3 P + N [2]	3	**DF83N**
32	10 x 38	1 P	12	**DF101**
		N	12	**DF10N**
		1 P + N [2]	6	**DF101N**
		2 P	6	**DF102**
		3 P	4	**DF103**
		3 P + N [2]	3	**DF103N**
50	14 x 51	1 P	6	**DF141**
		N	6	**DF14N**
		2 P	3	**DF142**
		3 P	2	**DF143C** [3]
		3 P + N [2]	1	**DF143NC** [3]
125	22 x 58	1 P	6	**DF221**
		N	6	**DF22N**
		2 P	3	**DF222**
		3 P	2	**DF223C** [3]
		3 P + N [2]	1	**DF223NC** [3]

Fuse carriers with "blown fuse" indicators (LED) [1] [4]

Conventional thermal current (Ith)	Size of cartridge fuse or link	Composition	Sold in lots of	Unit reference
A	mm			
25	8.5 x 32	2 P	6	**DF82V**
		3 P	4	**DF83V**
32	10 x 38	1 P	12	**DF101V**
		1 P + N [2]	6	**DF101NV**
		2 P	6	**DF102V**
		3 P	4	**DF103V**
		3 P + N [2]	3	**DF103NV**
50	14 x 51	1 P	6	**DF141V**
		3 P	2	**DF143VC** [3]
		3 P + N [2]	1	**DF143NVC** [3]
125	22 x 58	3 P	2	**DF223VC** [3]
		3 P + N [2]	1	**DF223NVC** [3]

(1) Each pole can be marked. A clip-in marker holder is provided for this purpose. DF8●●● and DF10●●● are pad lockable fuse carriers.
(2) N: neutral pole fitted with a locked tubular link as standard.
(3) A letter "C" in the reference indicates that the fuse carrier can be fitted with auxiliary early break, "blown fuse" signalling and "fuse present" signalling contacts.
(4) Operational voltage of the blown fuse indicator: 110 V...690 V.

Introduction: page B4/2
Characteristics: page B4/8
Dimensions: page B4/9
Schemes: page B4/9

Product references - DF type

PF106836.eps

DF14AM●

Accessories

Auxiliary early break and "blown fuse" signalling contacts

Fuse carriers to be equipped	Size of cartridge fuse or link	Number of contacts	Sold in lots of	Unit reference
DF14 (3 P or 3 P + N)	14 x 51	1	1	**DF14AM1**
		2	1	**DF14AM2**
DF22 (3 P or 3 P + N)	22 X 58	2	1	**DF22AM2**

PB111829.eps

DF10AP

Fuse carrier assembly kits [1]

Fuse carriers to be assembled	Size of cartridge fuse or link	Composition	Sold in lots of	Unit reference
DF8	8.5 x 32	1 pin, 2 clips	12	**DF10AP**
DF10	10 x 38			

(1) 1 pin and 2 clips are required to assemble two DF8 or DF10 fuse carriers together.
1 pin and 3 clips are required to assemble two DF14 or DF22 fuse carriers together.

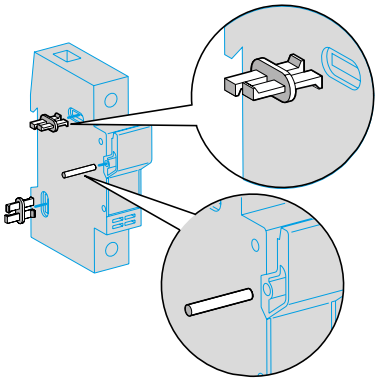

524196.eps

Detail of assembly clip and pin mounting

For protection of control circuits or transformers

References

PB120627.eps

DFCC1

PB120628.eps

DFCC3V

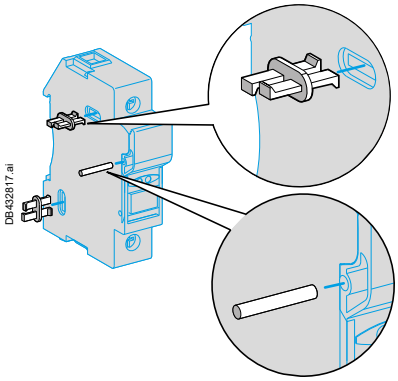
DB432817.ai

Detail of assembly clip and pin mounting

Fuse carriers [1]

Conventional thermal current (Ith)	Size of cartridge fuse or link	Composition	Sold in lots of	Unit reference
A				
30	Class CC	1 P	12	**DFCC1**
		2 P	12	**DFCC2**
		3 P	6	**DFCC3**

Fuse carriers with "blown fuse" indicators (LED) [1] [2]

Conventional thermal current (Ith)	Size of cartridge fuse or link	Composition	Sold in lots of	Unit reference
A				
30	Class CC	1 P	12	**DFCC1V**
		2 P	6	**DFCC2V**
		3 P	6	**DFCC3V**

Fuse carrier assembly kits [3]

Fuse carriers to be assembled	Size of cartridge fuse or link	Composition	Sold in lots of	Unit reference
DFCC	Class CC	1 pin, 2 clips	12	**DF10AP**

(1) Each pole can be marked. A clip-in marker holder is provided for this purpose. Clip-in markers type AB1R● or AB1G● can also be used. DFCC fuse holders are pad lockable.
(2) Operational voltage of the blown fuse indicator: 230 V...690 V.
(3) 1 pin and 2 clips are required to assemble two DFCC fuse carriers together.

Product references

DF101	**DF222V**
DF101N	**DF223C**
DF101NV	**DF223NC**
DF101PV	**DF223NVC**
DF101V	**DF223VC**
DF102	**DF22AM1**
DF102V	**DF22AM2**
DF103	**DF22AP**
DF103N	**DF22N**
DF103NV	**DF81**
DF103V	**DF81N**
DF10AP	**DF81NV**
DF10N	**DF81V**
DF141	**DF82**
DF141N	**DF82V**
DF141NV	**DF83**
DF141V	**DF83N**
DF142	**DF83NV**
DF142V	**DF83V**
DF143C	**DFCC1**
DF143NC	**DFCC1V**
DF143NVC	**DFCC2**
DF143VC	**DFCC2V**
DF14AM1	**DFCC3**
DF14AM2	**DFCC3V**
DF14AP	**DK1CB92**
DF14N	
DF221	
DF221N	
DF221NV	
DF221V	
DF222	

This document is current. Click on the product reference to get the most recent availability status (hyperlink to **se.com** product datasheet).
If your product variant is no longer available, please consult your distributor or regional sales office.

Fuse carriers

Technical Data for Designers

Contents

DF type:
> Characteristics B4/8
> Dimensions and schemes B4/9
DF type for the North American market:
> Characteristics B4/10
> Dimensions and schemes B4/11

Characteristics - DF type

Environment characteristics

Fuse carrier type			DF8	DF10	DF14	DF22
Conforming to standards			IEC/EN 60947-3, IEC/HD 60269-2	IEC/EN 60947-3 (1), IEC/HD 60269-2, R22HL2, UL 4248-1 (2), CSA C22.2 No 4248-1 (2)	IEC/EN 60947-3, UL 4248-1, CSA C22.2 No 4248-1	
Product certification			IEC, EAC, CCC, UKCA	IEC, UL, CSA, EAC, DNV-GL, CCC, UKCA	IEC, UL, CSA, EAC, UKCA	
Degree of protection	Conforming to IEC 60529		IP 20			
Ambient air temperature	Storage	**°C**	-40…+80			
	For operation, with derating (1)	**°C**	-20…+60			
Operating positions			± 23° in relation to normal mounting plane			
Flame resistance	Conforming to IEC 60695-2-1	**°C**	960			

Pole characteristics

Fuse size		**mm**	8.5 x 32		10 x 38		14 x 51		22 x 58	
Maximum power dissipated by fuse		**W**	2.50		3.00		5.00		9.50	
Rated insulation voltage (Ui) with tubular links, a.c. or D.C. supply		**V**	500		690		690		690	
Rated impulse withstand voltage (Uimp)		**kV**	6		6		8		8	
Conventional thermal current (Ith) for ambient air temperature ≤ 20 °C (3)										
	With tubular links	**A**	25		32		50		125	
	With aM cartridge fuses	**A**	25		32		50		125	
	With gG cartridge fuses	**A**	25		32		50		100	
Rated conditional short-circuit current Conforming to IEC 60947-3										
	400 V	**kA**	20		120		120		120	
	500 V	**kA**	–		120		120		120	
	690 V	**kA**	–		–		80		80	
Peak withstand current (dynamic stress) Conforming to IEC 60269-1										
	With tubular links	**kA**	11		15		15		19	
Cabling (number of conductors x c.s.a.)			**Min.**	**Max.**	**Min.**	**Max.**	**Min.**	**Max.**	**Min.**	**Max.**
	Solid cable	**mm²**	1 x 1	1 x 16 2 x 6	1 x 1	1 x 16 2 x 6	1 x 2.5	1 x 25 2 x 10	1 x 2.5	1 x 35 2 x 25
	Flexible cable without cable end	**mm²**	1 x 1	1 x 10 2 x 6	1 x 1	1 x 10 2 x 6	1 x 2.5	1 x 25 2 x 10	1 x 2.5	1 x 35 2 x 16
	Flexible cable with cable end	**mm²**	1 x 1	1 x 10 2 x 6	1 x 1	1 x 10 2 x 6	1 x 2.5	1 x 25 2 x 10	1 x 2.5	1 x 35 2 x 16
Tightening torque		**Nm**	2.2				3.5		4	

Characteristics of early break and signalling contacts DF14 AM and DF22 AM

Rated insulation voltage (Ui) a.c. supply		**V**	250			
Conventional thermal current (Ith) for ambient air temperature ≤ 20 °C (1)		**A**	5			
Rated operational current			**24 V**	**48 V**	**127 V**	**240 V**
	Category AC-15	**A**	4	4	3	2.5
	Category DC-13	**A**	3	1	0.2	0.1
Definition of rated characteristics	Conforming to IEC 60947-5-1		B300			
Low load operating characteristics	Minimum voltage	**V**	10			
	Minimum current	**mA**	30			
Cabling			Faston connectors			

(1) DF101PV excluded.
(2) DF101PV add UL/CSA 4248-19.
(3) For use in an installation with ambient temperature > 20 °C, apply a derating coefficient:

Maximum temperature	20 °C	30 °C	40 °C	50 °C	60 °C
Max. relative humidity	95 %	90 %	80 %	50 %	50 %
Current derating coefficient	1	0.95	0.9	0.8	0.7

Number of poles (each side)	1 to 3	4 to 6	≥7
Current derating coefficient	1	0.95	0.9

Fuse carriers
Ref.

Dimensions, schemes - DF type

Dimensions

Modular fuse carriers 25 A and 32 A

Mounting on 35 mm ⊔ rail

DF81 and DF81V
DF101 and DF101V
DF10N

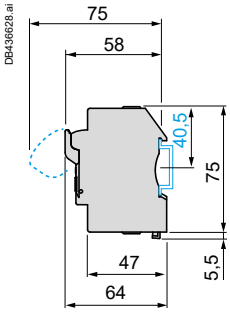

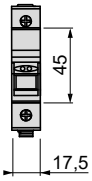

DF81N and DF81NV
DF82 and DF82V
DF101N and DF101NV
DF102 and DF102V

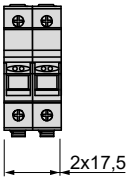

DF83 and DF83V
DF103 and DF103V

DF83N and DF83NV
DF103N and DF103NV

Modular fuse carriers 50 A

Mounting on 35 mm ⊔ rail

DF141 and DF141V
DF14N

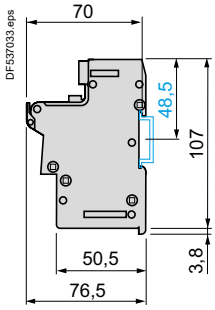

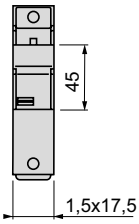

DF141N and DF141NV
DF142 and DF142V

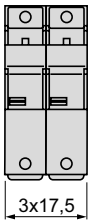

DF143C and DF143VC

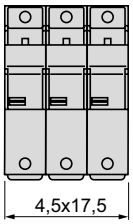

DF143NC and DF143NVC

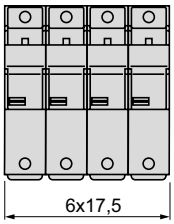

Modular fuse carriers 125 A

Mounting on 35 mm ⊔ rail

DF221 and DF221V
DF22N

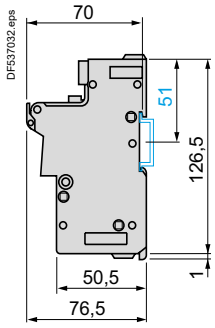

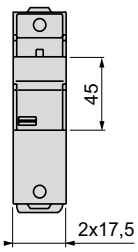

DF221N and DF221NV
DF222 and DF222V

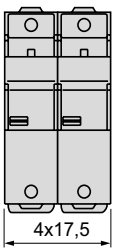

DF223C and DF223VC

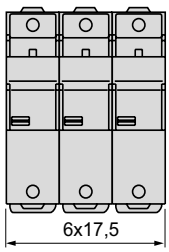

DF223NC and DF223NVC

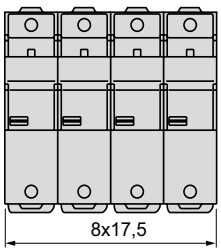

Schemes

Modular fuse carriers

DF•1P

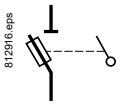

DF•N

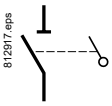

DF•1P + N

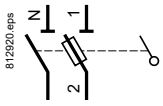

DF•2P

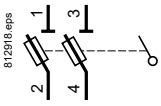

DF•3P

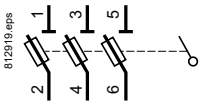

DF•3P + N

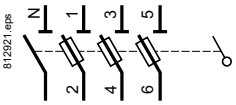

Introduction:
page B4/2

References:
pages B4/3 and B4/4

Characteristics:
page B4/8

Characteristics - DF type

Environment characteristics

Fuse carrier type			DFCC
Conforming to standards			UL 4248-1 & 4, CSA 22-2 No 4248-1 & 4
Product certification			UL, CSA, CCC, UKCA
Degree of protection	Conforming to IEC 60529		IP 20
Ambient air temperature	Storage	**°C**	-40…+80
	For operation, with derating [1]	**°C**	-20…+60
Operating positions	Without derating		±23° in relation to normal vertical mounting plane
Flame resistance	Conforming to IEC 60695-2-1	**°C**	960

Pole characteristics

Fuse carrier type			DFCC	
Fuse size			Class CC	
Maximum power dissipated by fuse		**W**	3.00	
Rated insulation voltage (Ui) with tubular links, a.c. supply		**V**	600	
Rated impulse withstand voltage (Uimp)		**kV**	6	
Conventional thermal current (Ith) for ambient air temperature ≤ 40 °C [1]				
	With tubular links	**A**	30	
	With aM cartridge fuses	**A**	30	
	With gG cartridge fuses	**A**	30	
Short-circuit current withstand With UL 248-4 Class CC fuses				
	Conforming to UL 512 at 600 V	**kA**	200	
Cabling (number of conductors x c.s.a.)			**Min.**	**Max.**
	Solid cable	**mm²**	1 x 1.5	1 x 16 2 x 6
	Flexible cable without cable end	**mm²**	1 x 1.5	1 x 10 2 x 6
	Flexible cable with cable end	**mm²**	1 x 1.5	1 x 10 2 x 6
Tightening torque		**Nm**	2.2	

(1) For use in an installation with ambient temperature > 20 °C, apply a derating coefficient:

Maximum temperature	20 °C	30 °C	40 °C	50 °C	60 °C
Max. relative humidity	95 %	90 %	80 %	50 %	50 %
Current derating coefficient	1	0.95	0.9	0.8	0.7

Dimensions, schemes - DF type

Dimensions

Modular fuse carriers 30 A

Mounting on 35 mm ⊔ rail

DFCC1 and DFCC1V

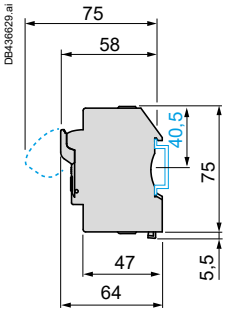

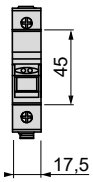

DFCC2 and DFCC2V

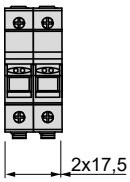

DFCC3 and DFCC3V

Schemes

Modular fuse carriers

DFCC1P

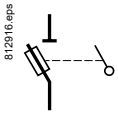

DFCC2P

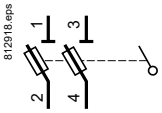

DFCC3P

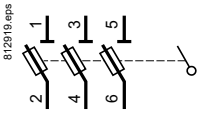

Life Is On Schneider Electric

TeSys Power
Switch-disconnector fuses

Introduction	B5/2

Switch-disconnector fuses

Type of product	Range		Pages
IEC - Switch-disconnector fuses For NFC / DIN fuses	From 32 to 1250 A		B5/4
IEC - Switch-disconnector fuses For BS fuses	From 32 to 1250 A		B5/6
UL - Switch-disconnector fuses For CC / J fuses	From 30 to 800 A		B5/8
NFC - Cartridge fuses Type aM, gG	From 0.16 to 125 A		B5/10
DIN - Cartridge fuses Type aM, gG	From 10 to 1250 A	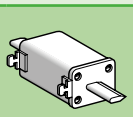	B5/11
Auxiliary contacts for IEC and UL switch-disconnector fuses	From 32 to 1250 A	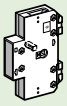	B5/12
Handles	From 32 to 1250 A		B5/13
Other accessories	From 32 to 1250 A		B5/14

Technical Data for Designers	B5/17

A customizable functional block

Whatever its rating, the switch-disconnector fuse fits the need: particular position of the handle, triggering of an automatic control before full opening, enhanced protection of terminals...

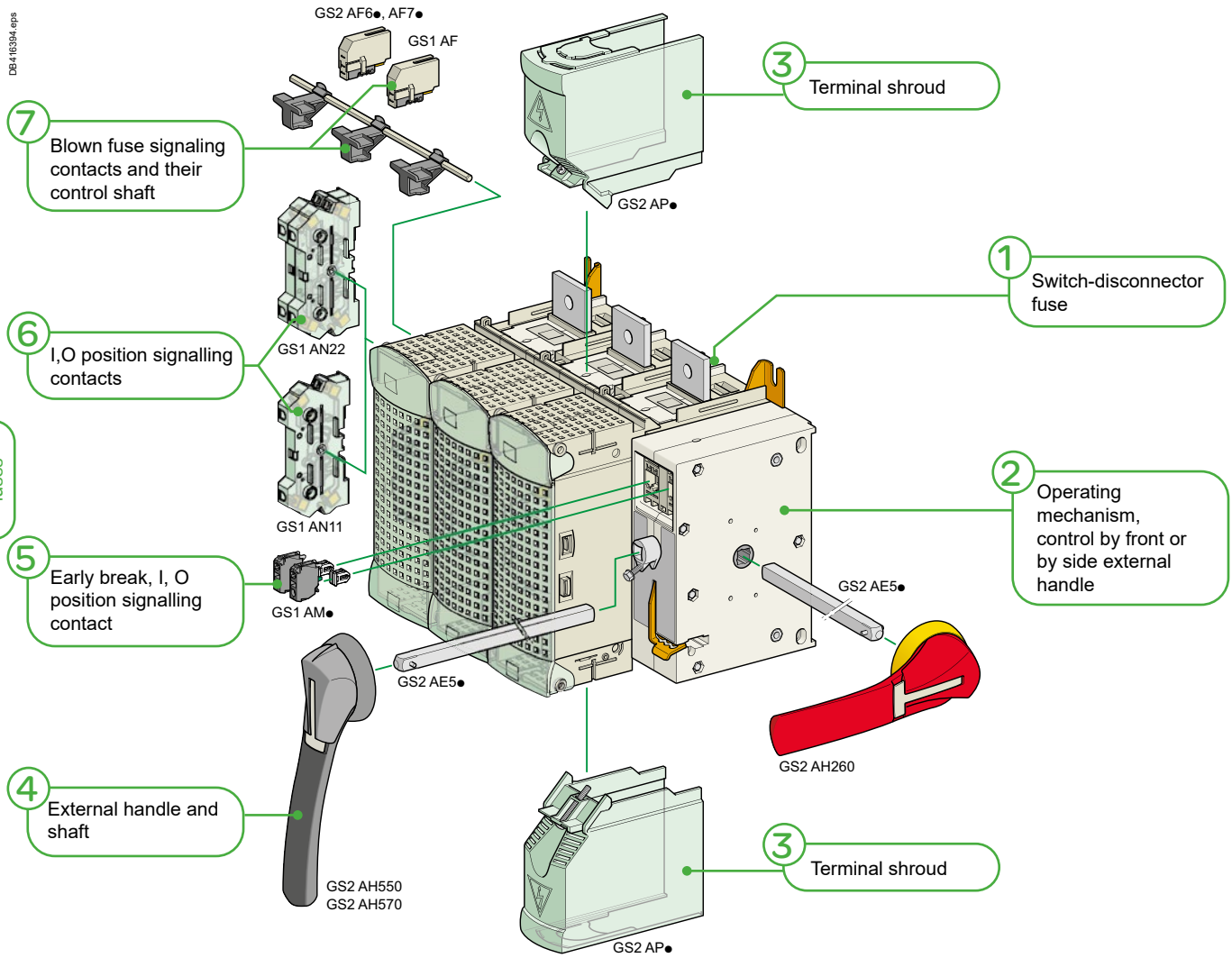

Customizable

GS2630 A switch-disconnector fuse

1 **Switch-disconnector fuse**
- NFC/DIN or BS fuse compatible
- Enhanced isolation between poles
- On-load making/breaking with double break isolation of the power circuit

2 **Operating mechanism**
- For one front or side external handle, right or left side
- Cavity for early-break contacts

3 **Terminal shrouds**
- For use when the switch-disconnector fuse is installed outside an enclosure or when the operating voltage is over 500 V AC

4 **Operating handle**
- Padlockable in open position

5 **GS1AM●●● Early-break signalling contacts**
Activated before the poles are opened

6 **GS1AN●● Position signalling contacts**
- Synchronized with the poles operation

7 **GS1AF●● Blown fuse signalling contacts**
- A missing fuse is also indicated

Life Is On Schneider Electric

Simplicity of the direct operating

The mounting of an operating handle directly on the side of the switch-disconnector fuse is a simple operation.
This handle will be for use by qualified personnel only.
As the mechanical design is simplified, the manoeuvre will be immediately understood by the operator.
Each handle can be padlocked in open position. Locking device for 3 padlocks.

DB416395.eps

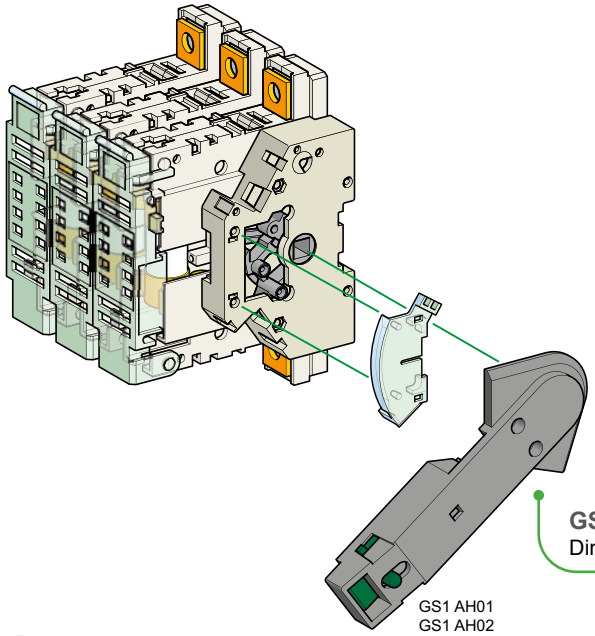

GS1JD3 - 100 A switch-disconnector fuse
Direct lateral operating

DB416396.eps

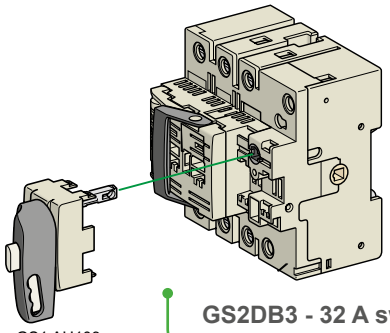

GS2DB3 - 32 A switch-disconnector fuse
Direct front operating

Position of the handle, a free choice

Switch-disconnector fuses

Performance remote operating

Located on the front or side panel of an enclosure, the operating handle provide complementary features:
- simple (IP55) or reinforced (IP65) protection against dust
- intermediate "Test" position
- door interlock when the handle is in "Close" position, opening by mean of a special tool is needed for opening.
- optional key-operated handle lock

The handles are available in different lengths. They are chosen according the operating effort which depends on the rating of the switch-disconnector fuse.
The drive shaft can be cut to the ideal length.
The choice of a red and yellow handle (CNOMO standard) will identify an "Emergency Stop handle" among others handles, generally grey and black.

DB416397.eps

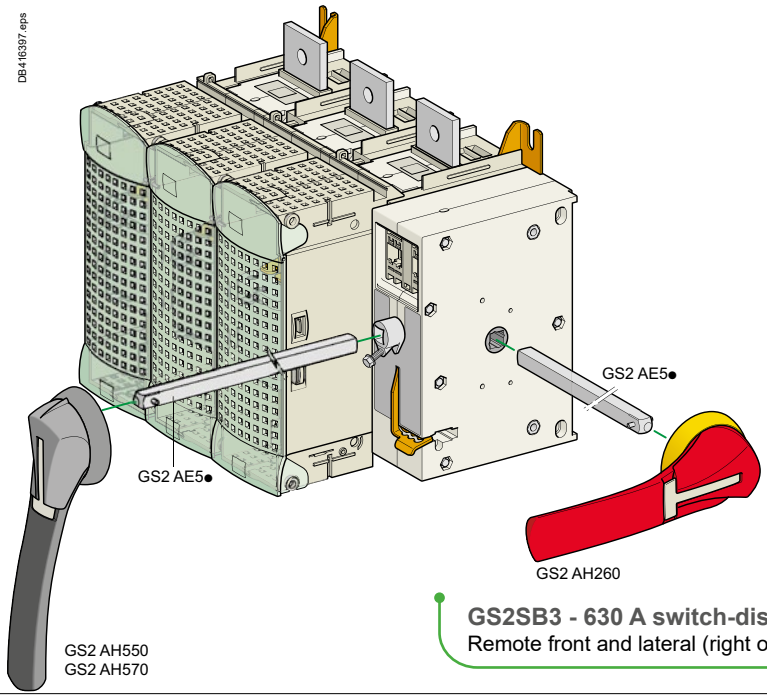

GS2SB3 - 630 A switch-disconnector fuse
Remote front and lateral (right only) operating

IEC - For NFC / DIN fuses - From 32 to 1250 A

GS1DD3

GS2F3

GS2K4

Rating		A	32		50		63		100		125	
Number of poles			3	3+N	3	4	3	4	3	4	3	4
Fuse size			10 x 38		14 x 51		Size 000		22 x 58		22 x 58	
For external left hand side-mounted operators												
Switch-disconnector fuses reference			**GS1DD3**	**GS1DD4**	**GS2FG3**	**GS2FG4**	**GS2GG3**	**GS2GG4**	**GS2JG3**	**GS2JG4**	**GS2KG3**	**GS2KG4**
Handle	Black/Grey	IP65	**GS2AH310**						**GS2AH330**			
	Red/Yellow	IP65	-						**GS2AH340**			
Auxiliary contacts	O/I + Test	1NO + 1NC	-		-							
		2NO + 2NC	-		**GS1AN22G**							
	O/I + early break	1NO	**GS1AM110**									
		2NO	-									
	Blown fuse		-		**GS1AF1**		-		**GS1AF23**	**GS1AF24**	**GS1AF23**	**GS1AF24**
For external front-mounted and right-hand side-mounted operators												
Switch-disconnector fuses reference			**GS1DD3**	**GS1DD4**	**GS2F3**	**GS2F4**	**GS2G3**	**GS2G4**	**GS2J3**	**GS2J4**	**GS2K3**	**GS2K4**
Adapter for front-mounted operator			-	-	-	-	**LV481701**	**LV481701**	**LV481701**	**LV481701**	**LV481701**	**LV481701**
Front-mounted handle	Black/Grey	IP55	**GS2AH515**						**GS2AH535**			
	Black/Grey	IP65	**GS2AH510**						**GS2AH530**			
	Red/Yellow	IP65	**GS2AH520**						**GS2AH540**			
Front-mounted handle + Test position	Black/Grey	IP65	**GS2AHT510**						**GS2AHT530**			
	Red/Yellow	IP65	-						**GS2AHT540**			
RH side-mounted handle	Black/Grey	IP55	-						**GS2AH235**			
	Black/Grey	IP65	**GS2AH210**						**GS2AH230**			
	Red/Yellow	IP65	**GS2AH220**						**GS2AH240**			
Auxiliary contacts	O/I + Test	1NO + 1NC	-		**GS1AN11**							
		2NO + 2NC	-		**GS1AN22**							
		1NO + 1NC + test	-		**GS1ANT11**							
		2NO + 2NC + test	-		**GS1ANT22**							
	O/I + Test + early break	1NO	-		**GS1AM110**							
		1NC	-		-							
	Blown fuse		-		**GS1AF1**		-		**GS1AF23**	-	**GS1AF23**	-
Accessories												
Shaft for external handle (mm)		200	**GS2AE82**		**GS2AE22**							
		320	**GS2AE8**		**GS2AE2**							
		400	**GS2AE81**		**GS2AE21**							
Terminal shroud			Integrated						**GS1AP33** (3P), **GS1AP34** (4P)			
Dimensions												
	Direct front-mounted version		page B5/25		page B5/26							
	External front-mounted version		page B5/25		page B5/27							

Handles

GS1AH01

GS1AH02

GS2AH●10
GS2AH●20

GS2AH●30
GS2AH●40

GS2AH●50
GS2AH●60

GS2AH●70
GS2AH●80

See details on handles page B5/13.

Characteristics: pages B5/18 and B5/19
Dimensions: pages B5/25 to B5/29
Schemes: page B5/33

	GS2KK3		*GS2LL4*				*GS2N3*							
	125		**160**				**250**		**400**		**630**		**1250**	
	3	4	3	4	3	4	3	4	3	4	3	4	3	4
	Size 00		Size 00		Size 0		Size 1		Size 2		Size 3		Size 4	
	GS2KKG3	**GS2KKG4**	**GS2LLG3**	**GS2LLG4**	**GS2LG3**	**GS2LG4**	**GS2NG3**	**GS2NG4**	**GS2QQG3**	**GS2QQG4**	**GS2SG3**	**GS2SG4**	**GS2VG3**	
	GS2AH330										-			
	GS2AH340										-			
	GS1AN11G													
	GS1AN22G													
	GS1AM110													
	GS1AM101													
	-				**GS1AF33**	-	**GS1AF43**	-	**GS1AF43**	-	-	-	-	-
	GS2KK3	**GS2KK4**	**GS2LL3**	**GS2LL4**	**GS2L3**	**GS2L4**	**GS2N3**	**GS2N4**	**GS2QQ3**	**GS2QQ4**	**GS2S3**	**GS2S4**	**GS2V3**	**GS2V4**
	LV481701	**LV481701**	**LV481701**	**LV481701**	**LV481701**	**LV481701**	**LV481702**	**LV481702**	**LV481702**	**LV481702**	-	-	-	-
	GS2AH535										-			
	GS2AH530										**GS2AH550**		**GS2AH570**	
	GS2AH540										**GS2AH560**		-	
	GS2AHT530										-			
	GS2AHT540										-			
	GS2AH235										-			
	GS2AH230										**GS2AH250**			
	GS2AH240										-			
	GS1AN11													
	GS1AN22													
	GS1ANT11										-			
	GS1ANT22										-			
	GS1AM110										-			
	GS1AM101										-			
	-				**GS1AF33**	-	**GS1AF43**	-	**GS1AF43**	-	**GS2AF63**	-	**GS2AF73**	**GS2AF74**
	GS2AE22										-			
	GS2AE2										**GS2AE5**			
	GS2AE21										**GS2AE51**			
	GS1AP33 (3P), **GS1AP34** (4P)						**GS1AP43** (3P), **GS1AP44** (4P)				**GS2AP73**	**GS2AP64**	**GS2AP83**	-
	page B5/26										page B5/28			
	page B5/27										page B5/29			

Auxiliary contacts

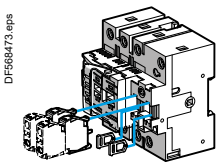

GS1AM1●●

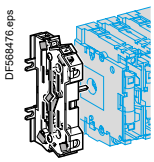

GS1AN●●●

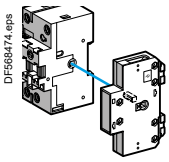

GS1AM●11

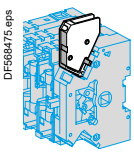

GS1AM●

See details on auxiliary contacts, page B5/12.

Maximal number of auxiliary contacts

Switch rating (A)	Standard configuration	With additional bracket	Reference of additional bracket
30...32	4	4	**GS1AD10** (1)
32...400	4	4	**GS2AD20** (2)
200...400	8	8	**GS2AD20** (2)
630...1250	8	-	-

(1) Only compatible with switch disconnector fuses starting by GS1D●●
(2) Only compatible with switch disconnector fuses starting by GS2●●●

Characteristics: pages B5/18 and B5/19
Dimensions: pages B5/25 to B5/29
Schemes: page B5/33

IEC - For BS fuses - From 32 to 1250 A

GS1DDB3

GS2JB3

Rating A			32				63		100		160			
Number of poles			3	3+N	3	4	3	4	3	4	3	4	3	4
Fuse size			A1		A1		A2-A3		A4		A4		B1-B2	
For external front-mounted and right-hand side-mounted operators														
Switch-disconnector fuses reference			**GS1DDB3**	**GS1DDB4**	**GS2DB3**	**GS2DB4**	**GS2GB3**	**GS2GB4**	**GS2JB3**	**GS2JB4**	**GS2LLB3**	**GS2LLB4**	**GS2LB3**	**GS2LB4**
Front-mounted handle	Black/Grey	IP55	**GS2AH515**						**GS2AH535**					
	Black/Grey	IP65	**GS2AH510**						**GS2AH530**					
	Red/Yellow	IP65	**GS2AH520**						**GS2AH540**					
Front-mounted handle + Test position	Black/Grey	IP65	**GS2AHT510**						**GS2AHT530**					
	Red/Yellow	IP65	-						**GS2AHT540**					
RH side-mounted handle	Black/Grey	IP55	-						**GS2AH235**					
	Black/Grey	IP65	**GS2AH210**						**GS2AH230**					
	Red/Yellow	IP65	-						**GS2AH240**					
Auxiliary contacts	O/I + Test	1NO + 1NC	-		**GS1AN11**									
		2NO + 2NC	-		**GS1AN22**									
		1NO + 1NC + test	-		**GS1ANT11**									
		2NO + 2NC + test	-		**GS1ANT22**									
	O/I + Test + early break	1NO	**GS1AM110** - max 4 contacts											
		1NC	-											
Accessories														
Shaft for external handle (mm)		200	**GS2AE82**		**GS2AE22**									
		320	**GS2AE8**		**GS2AE2**									
		400	**GS2AE81**		**GS2AE21**									
Terminal shroud			Integrated						**GS1AP33** (3P), **GS1AP34** (4P)					
Dimensions														
	Direct front-mounted version		page B5/25				page B5/26							
	External front-mounted version		page B5/25				page B5/27							

Switch-disconnector fuses

GS2MMB3

GS2SB3

	200		250		315		400		630		800		1250	
	3	4	3	4	3	4	3	4	3	4	3	4	3	4
	B1-B2		B1...B3		B1...B3		B1...B4		C1-C2		C1...C3		D1	
	GS2MMB3	**GS2MMB4**	**GS2NB3**	**GS2NB4**	**GS2PPB3**	**GS2PPB4**	**GS2QQB3**	**GS2QQB4**	**GS2SB3**	**GS2SB4**	**GS2TB3**	**GS2TB4**		**GS2VB4**
	GS2AH535								-					
	GS2AH530								**GS2AH550**				**GS2AH570**	
	GS2AH540								**GS2AH560**				-	
	GS2AHT530								-					
	GS2AHT540								-					
	GS2AH235								-					
	GS2AH230								**GS2AH250**					
	GS2AH240								**GS2AH260**					
	GS1AN11													
	GS1AN22													
	GS1ANT11								-					
	GS1ANT22								-					
	GS1AM110 - max 8 contacts													
	-													
	GS2AE22								**GS2AE52**					
	GS2AE2								**GS2AE5**					
	GS2AE21								**GS2AE51**					
	GS1AP43 (3P), **GS1AP44** (4P)								**GS2AP73** (3P), **GS2AP64** (4P)				-	-
	page B5/26								page B5/28					
	page B5/27								page B5/29					

Characteristics:
pages B5/20 and B5/21

Dimensions:
pages B5/25 to B5/29

Schemes:
page B5/33

UL - For CC and J fuses - From 32 to 800 A

GS1DU3

GS2GU3N

Rating			30 Compact		30		60	100
Number of poles			3		3		3	3
Fuse size			CC	J	CC	J	J	J
For direct operators								
Switch-disconnector fuses reference			**GS1DDU3**	**GS1DU3**	**-**			
Handle	Black		-	-	-			
Auxiliary contacts	O/I + Test	1NO + 1NC	-					
		2NO + 2NC	-					
	O/I + early break	1NO	**GS1AM110 + GS1AD10**		-			
		1NC	-		-			
For external front-mounted operators								
Switch-disconnector fuses reference			**GS1DDU3**	**GS1DU3**	**GS2EEU3**	**GS2EU3N**	**GS2GU3N**	**GS2JU3N**
Front-mounted handle	Black/Grey	1,3R, 12	**GS2AH110**		**GS2AH130**			
		4, 4X	**GS2AH410**		**GS2AH430**			
	Red/Yellow	1,3R, 12	**GS2AH120**		**GS2AH140**			
		4, 4X	**GS2AH420**		**GS2AH440**			
Front-mounted handle + Test position	Black/Grey	1,3R, 12	-		-			
		4, 4X	-		**GS2AHT430**			
	Red/Yellow	1,3R, 12	-		-			
		4, 4X	**GS2AHT420**		-			
Auxiliary contacts	O/I + Test	1NO + 1NC	-		**GS1AN11**			
		2NO + 2NC	-		**GS1AN22**			
		1NO + 1NC + test	-		**GS1ANT11**			
		2NO + 2NC + test	-		**GS1ANT22**			
	O/I + Test + early break	1NO	**GS1AM110** - max 4 contacts (1)		**GS1AM110** - max 4 contacts (1)			
		1NC	-		-			
Accessories								
Shaft for external handle (mm)		320	**GS2AE8**		**GS2AE2**			
		400	**GS2AE81**		**GS2AE21**			
Terminal shroud			Integrated					
Dimensions								
	Direct front-mounted version		page B5/25				page B5/26	
	External front-mounted version		page B5/25				page B5/27	

(1) 4 more contacts allowed with GS1AD10 additional bracket.

Characteristics: pages B5/22 and B5/23
Dimensions: pages B5/30 to B5/32
Schemes: page B5/33

GS2QU3N

GS2TU3

	200	400	600	800
	3	3	3	3
	J	J	J	J
	-		-	-
	-		-	
	-		-	
	-		-	
	-		-	
	GS2MU3N	**GS2QU3N**	**GS2SU3**	**GS2TU3**
	GS2AH130		-	
	GS2AH430		**GS2AH150**	
	GS2AH140		-	
	GS2AH440		**GS2AH160**	
	-		-	
	-		-	
	-		-	
	-		-	
	GS1AN11			
	GS1AN22			
	GS1ANT11		-	
	GS1ANT22		-	
	GS1AM110 - max 8 contacts [1]		**GS1AM110** - max 8 contacts only	
	-		-	
	GS2AE2		**GS2AE5**	
	GS2AE21		**GS2AE51**	
	GS2AP43	**GS2AP53**	**GS2AP73**	
	page B5/26		page B5/28	
	page B5/27		page B5/29	

Characteristics: pages B5/22 and B5/23
Dimensions: pages B5/30 to B5/32
Schemes: page B5/33

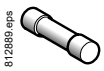

DF2CA●●●
DF2CN●●

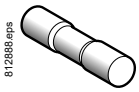

DF2EA●●●
DF2EN●●

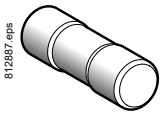

DF2FA●●
DF2FN●●

NFC Cartridge fuses - Type aM / gG - From 0.25 to 125 A

Fuse type	Maximum rated voltage	Rating	Sold in lots of	Fuses without striker	
				Unit reference	
	V ∼	A		aM	gG
Cylindrical 8.5 x 31.5	400	1	10	–	DF2BN0100
		2	10	DF2BA0200	DF2BN0200
		4	10	DF2BA0400	DF2BN0400
		6	10	DF2BA0600	DF2BN0600
		8	10	–	DF2BN0800
		10	10	–	DF2BN1000
		12	10	–	DF2BN1200
		16	10	–	DF2BN1600
		20	10	–	DF2BN2000
Cylindrical 10 x 38	500	0.50	10	DF2CA005	–
		1	10	DF2CA01	–
		2	10	DF2CA02	DF2CN02
		4	10	DF2CA04	DF2CN04
		6	10	DF2CA06	DF2CN06
		8	10	DF2CA08	DF2CN08
		10	10	DF2CA10	DF2CN10
		12	10	DF2CA12	DF2CN12
		16	10	DF2CA16	DF2CN16
		20	10	–	DF2CN20
	400	20	10	DF2CA20	–
		25	10	DF2CA25	DF2CN25
		32	10	DF2CA32	DF2CN32
Cylindrical 14 x 51	690	0.25	10	DF2EA002	–
		0.50	10	DF2EA005	–
	500	16	10	DF2EA16	–
		20	10	DF2EA20	–
		25	10	DF2EA25	DF2EN25
		32	10	DF2EA32	DF2EN32
		40	10	DF2EA40	DF2EN40
	400	50	10	DF2EA50	DF2EN50
Cylindrical 22 x 58	690	10	10	–	DF2FN10
		20	10	–	DF2FN20
		25	10	–	DF2FN25
		32	10	–	DF2FN32
		40	10	DF2FA40	DF2FN40
		50	10	DF2FA50	DF2FN50
	500	63	10	DF2FA63	DF2FN63
		80	10	DF2FA80	DF2FN80
		100	10	DF2FA100	DF2FN100
	400	125	10	DF2FA125	–

For protection of equipment with current peaks
For protection of circuits without significant current peaks

Life Is On Schneider Electric

Product references

DF2HA1161

DIN Cartridge fuses - Type aM /gG - From 10 to 1250 A

Fuse type	Maximum rated voltage	Rating	Sold in lots of		Fuses without striker		Fuses with striker	
					Unit reference		Unit reference	
	V ∼	A	aM	gG	aM	gG	aM	gG
Blade size 00	690	100	3	10	–	**DF2FGN100**	–	–
		125	3	10	–	**DF2FGN125**	–	–
	500	160	-	10	–	**DF2FGN160**	–	–
Blade size 1	690	160	3	3	**DF2HA1161**	–	–	–
		200	3	3	**DF2HA1201**	**DF2HN1201**	–	–
		250	3	-	**DF2HA1251**	–	–	–
	500	250	-	3	–	**DF2HN1251**	–	–

For protection of equipment with current peaks
For protection of circuits without significant current peaks

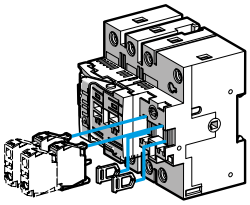

GS1AM1●●

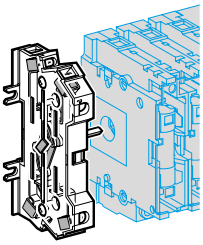

GS1AN●●●

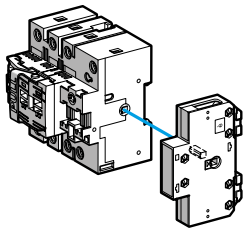

GS1AM●11

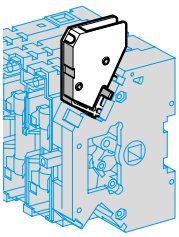

GS1AF●●

Switch-disconnector fuses

Auxiliary contacts for IEC and UL switch-disconnector fuses

Auxiliary early break and/or O, I and Test position signalling contacts (1) (2) (3)

Switch rating A (CEI)	A (UL)	Contact type	Type of operator	Rated operating current Ie (A) < 24 V DC	< 240 V AC	Reference
32…1250	30 Compact 30...800	1 N/O	External, front or side-mounted (4)	2.8	3	**GS1AM110**
		1 N/C	External, front or side-mounted (4)	2.8	3	**–**

Auxiliary O, I and Test position signalling contacts (3) (5)

Switch rating A (CEI)	A (UL)	Contact type	Type of operator	Rated operating current Ie (A) < 24 V DC	< 240 V AC	Reference
Auxiliary O and I position signalling contacts						
50…1250	30...800	1 N/C + 1 N/O	External, front or RH side-mounted Direct	–	10	**GS1AN11**
			External, LH side	–	10	**GS1AN11G***
		2 N/C + 2 N/O	External, front or RH side-mounted Direct	–	10	**GS1AN22**
			External, LH side	–	10	**–**
Auxiliary O, I and Test position signalling contacts (3)						
50…400	30...400	1 N/C + 1 N/O	External, front side-mounted	–	10	**GS1ANT11**
		2 N/C + 2 N/O	External, front side-mounted	–	10	**GS1ANT22**

Auxiliary early break O and I position signalling contacts

Switch rating A (CEI)	Contact type	Type of operator	Rated operating current Ie (A) < 24 V DC	< 240 V AC	Reference
32	1 C/O	–	12	4	**GS1AM111***
	2 C/O	–	12	4	**–**
50…400	1 C/O	Direct, RH side	12	4	**GS1AM1***
	2 C/O	Direct, RH side	12	4	**GS1AM2***

Auxiliary "blown fuse" signalling contacts for use with NF C and DIN fuses (6)

Contact type	Switch rating A (CEI)	Fuse size	Number of poles	Rated operating current Ie (A) < 24 V DC	< 240 V AC	Reference
1st C/O	50	14 x 51	3 or 4	12	4	**GS1AF1***
	100 and 125	22 x 58	3	12	4	**GS1AF23***
			4	12	4	-
	160	Size 0	3	12	4	**GS1AF33***
			4	12	4	**–**
	250 and 400	Size 1 and Size 2	3	12	4	**GS1AF43***
			4	12	4	**–**
	630	Size 3	3	12	4	**GS2AF63***
			4	12	4	**–**
	1250	Size 4	3	12	4	**GS2AF73***
			4	12	4	**GS2AF74***
2nd C/O	50…1250	–	3 or 4	12	4	**GS1AF***

(*) Not for UL switch-disconnector.
*(1) **For 32 A (CEI), 30 (UL) switch-disconnector fuses, these auxiliary contacts allow:***
- early break and O and I position signalling,
- O and I position signalling,
- O, I and Test position signalling,
- Test position signalling.
For 50 to 400 A (CEI), 30-400 A (UL) switch-disconnector fuses, they allow:
- early break,
- O and I position signalling,
- O, I and Test position signalling,
- Test position signalling.
For 630 and 1250 A (CEI), 630 and 800 A (UL) switch-disconnector fuses, they allow:
- early break and O and I position signalling,

(2) Maximum number of auxiliary contacts:

Switch rating A (CEI)	A (UL)		Standard	With additional bracket	Reference of additional bracket
32 (7)	30 Compact	CC	4	4 + 4	**GS1AD10**
		J	2	2 + 4	**GS1AD10**
32 (8)…160	30...100		4	4 + 4	**GS2AD20**
200…400	200 and 400		8	8 + 4	**GS2AD20**
630…1250	600 and 800		8	8	**–**

*(3) The Test position allows testing of the control circuits off-load. Auxiliary contacts **GS1AM110**, **GS1AM101** and **GS1ANT●●** only allow the text function with external handles **GS2AHT●●●**.*
(4) These auxiliary contacts can also be used with 630, 800 and 1250 A switch-disconnector fuses fitted with a direct front-mounted operator.
(5) Reversible add-on attachments for converting an N/C contact to an N/O contact and vice versa.
(6) For striker fuses (BS fuses are not available with striker).
*(7) For **GS1DDB3** fuse switch disconnector only.*
*(8) For 32 A: for fuse switch disconnector **GS2DB3** only.*

Characteristics: page B5/24
Dimensions: page B5/33
Schemes: page B5/33

PF568668.tif

GS1AH01

PF568669.tif

GS1AH02

PB123953.eps

GS2AH●10
GS2AH●20

PB123954.eps

GS2AH●30
GS2AH●40

PB123955.eps

GS2AH●50
GS2AH●60

PB123956.eps

GS2AH●70
GS2AH●80

Handles for IEC and UL switch-disconnector fuses

Handles for direct operators

Switch rating A (CEI)	Switch rating A (UL)	Type of operator	Handle colour	Reference
Handles for direct operators, padlockable				
32	-	Front	Black	**GS1AH103**
50 and 63	-	RH side	Black	**GS1AH01**
100…400	-	RH side	Black	**GS1AH02**

Handles for external operator

Switch rating A (CEI)	Switch rating A (UL)	Handle colour	Degree of protection	Protection index Nema	Reference
Handles for front-mounted external operators, padlockable and lockable in position O (1) Door interlock in I position (2)					
32…63	-	Grey/Black	IP 65	–	**GS2AH510**
			IP55	–	**GS2AH515**
		Red/Yellow	IP 65	–	**GS2AH520**
100…400	-	Grey/Black	IP 65	–	**GS2AH530**
			IP55	–	**GS2AH535**
		Red/Yellow	IP 65	–	**GS2AH540**
630 and 800	-	Grey/Black	IP65	–	**GS2AH550**
1250	-	Grey/Black	IP65	–	**GS2AH570**
		Red/Yellow	IP65	–	**GS2AH580**
-	30 Compact	Grey/Black	–	1, 3R, 12	**GS2AH110**
		Red/Yellow	–	1, 3R, 12	**GS2AH120**
		Grey/Black	–	1, 3R, 4, 4X, 12	**GS2AH410**
		Red/Yellow	–	1, 3R, 4, 4X, 12	**GS2AH420**
-	30…400	Grey/Black	–	1, 3R, 12	**GS2AH130**
		Red/Yellow	–	1, 3R, 12	**GS2AH140**
		Grey/Black	–	1, 3R, 4, 4X, 12	**GS2AH430**
		Red/Yellow	–	1, 3R, 4, 4X, 12	**GS2AH440**
-	600 and 800	Grey/Black	–	1, 3R, 12	**GS2AH150**
		Red/Yellow	–	1, 3R, 12	**GS2AH160**
Handles for front-mounted external operators with test facility (3), padlockable and lockable in "O" position (1). Door interlock in "I" position (2)					
32…63	-	Grey/Black	IP 65	–	**GS2AHT510**
-	30…400	Grey/Black	–	1, 3R, 4, 4X, 12	**GS2AHT430**
Handles for external right-hand side-mounted operators, padlockable and lockable in "O" position (1)					
32…63	-	Grey/Black	IP 65	–	**GS2AH210**
		Red/Yellow	IP65	–	**GS2AH220**
100…400	-	Grey/Black	IP65	–	**GS2AH230**
			IP55	–	**GS2AH235**
		Red/Yellow	IP65	–	**GS2AH240**
630…1250	-	Grey/Black	IP65	–	**GS2AH250**
Handles for external left-hand side-mounted operators, padlockable and lockable in "O" position (1)					
32…63	-	Grey/Black	IP 65	–	**GS2AH310**

*(1) Lockable with device **GS2AX1,** to be ordered separately.*
(2) Door interlock override by means of a tool.
*(3) The Test facility allows testing of the control circuits off-load, by using auxiliary contacts **GS1AM110**, **GS1AM101** or **GS1ANT●●**. In the "Test" position, the enclosure door can be opened.*

Dimensions:
pages B5/25 to B5/32

PB121455.eps

GS2AE5

PB121456.eps

GS2AE2 - GS2AE21

PB121457.tif

GS2AE8 - GS2AE81

Accessories for IEC and UL switch-disconnector fuses

Shafts for external operators

Switch rating A (CEI)	A (UL)	Shaft length mm	Shaft cross section mm	Reference
32	30 Compact	200	5 x 5	**GS2AE82**
		320	5 x 5	**GS2AE8**
		400	5 x 5	**GS2AE81**
50…400	30...400	200	10 x 10	**GS2AE22**
		320	10 x 10	**GS2AE2**
		400	10 x 10	**GS2AE21**
630…1250	600 and 800	320	12 x 12	**GS2AE5**
		400	12 x 12	**GS2AE51**

Terminal protection shrouds for upstream or downstream connector plates

Switch rating A (CEI)	A (UL)	Number of poles	Reference
50 and 63	30 Compact, 30...60 (3P)	3 or 4	(1)
100…160	100	3	**GS1AP33**
	–	4	**GS1AP34**
200…400	200	3	**GS1AP43**
	–	4	**GS1AP44**
–	400	3	**GS1APU53**
630…800	600 and 800	3	**GS2AP73**
	–	4	**GS2AP64**
1250	–	3	**GS2AP83**

Devices for locking fuse covers in "I" position (2)

Switch rating A	Fuse size	Number of poles	Reference
50	14 x 51	3 or 4	(3)
250	Size 1	3	**GS1AV53**
400	Size 2	4	**GS1AV74**

Cage terminals for connection of bare cables (without lug)

Switch rating A	Number of poles	Reference
50 and 63	3 or 4	(4)
200…250	3	**GS1AW43**

External handle locking device

Switch rating A	Description	Reference
32…1250	Device for RONIS EL11AP keylock (lock to be ordered separately).	**GS2AX1**

Flat mounting kit

Switch rating A	Description	Reference
50…400	The kit, for use with a front-mounted external handle, includes: ■ a 200 mm shaft, cross section 10 x 10 mm, ■ an adapter plate	**GS2ADL2**

(1) For these ratings, the switch-disconnector fuses are fitted with terminal covers as standard.
(2) For NF C and DIN switch-disconnector fuses fitted with right-hand mounted direct operator.
(3) For this rating, switch-disconnector fuses are fitted with a cover locking device as standard.
(4) For these ratings, switch-disconnector fuses are fitted with cage terminals as standard.

Product references

GS1AD010	GS1DDU3	GS2AH310	GS2JG3
GS1AD10	GS1DU3	GS2AH320	GS2JG4
GS1AE6	GS1FD3	GS2AH330	GS2JU3N
GS1AE7	GS1FD4	GS2AH340	GS2K3
GS1AF	GS1GD3	GS2AH350	GS2K4
GS1AF1	GS1GD4	GS2AH360	GS2KG3
GS1AF23	GS1JD3	GS2AH36F	GS2KG4
GS1AF24	GS1JD4	GS2AH410	GS2KK3
GS1AF33	GS1KD3	GS2AH420	GS2KK4
GS1AF34	GS1KD4	GS2AH430	GS2KKG3
GS1AF43	GS1KKD3	GS2AH440	GS2KKG4
GS1AF44	GS1KKD4	GS2AH510	GS2L3
GS1AH01	GS1LD3	GS2AH515	GS2L4
GS1AH02	GS1LD4	GS2AH520	GS2LB3
GS1AH101	GS1LLD3	GS2AH530	GS2LB4
GS1AH102	GS1LLD4	GS2AH535	GS2LG3
GS1AH103	GS1ND3	GS2AH540	GS2LG4
GS1AH110	GS1ND4	GS2AH550	GS2LL3
GS1AH130	GS1QQD3	GS2AH560	GS2LL4
GS1AH160	GS1QQD4	GS2AH570	GS2LLB3
GS1AH220	GS2AD030N	GS2AH580	GS2LLB4
GS1AH440	GS2AD040N	GS2AH60F	GS2LLG3
GS1AM1	GS2AD20	GS2AHT110	GS2LLG4
GS1AM101	GS2ADL2	GS2AHT120	GS2MMB3
GS1AM110	GS2AE2	GS2AHT130	GS2MMB4
GS1AM111	GS2AE21	GS2AHT140	GS2MU3N
GS1AM2	GS2AE22	GS2AHT410	GS2N3
GS1AM211	GS2AE23	GS2AHT420	GS2N4
GS1AN11	GS2AE5	GS2AHT430	GS2NB3
GS1AN11G	GS2AE51	GS2AHT440	GS2NB4
GS1AN22	GS2AE52	GS2AHT510	GS2NG3
GS1AN22G	GS2AE61	GS2AHT520	GS2NG4
GS1ANT11	GS2AE8	GS2AHT530	GS2PPB3
GS1ANT22	GS2AE81	GS2AHT540	GS2PPB4
GS1AP33	GS2AE82	GS2AP43	GS2QQ3
GS1AP34	GS2AEH12	GS2AP53	GS2QQ4
GS1AP43	GS2AESB	GS2AP64	GS2QQB3
GS1AP44	GS2AF63	GS2AP73	GS2QQB4
GS1AP63	GS2AF64	GS2AP83	GS2QQG3
GS1AP83	GS2AF73	GS2AP84	GS2QQG4
GS1AV1	GS2AF74	GS2AX1	GS2QU3N
GS1AV2	GS2AH100TO200	GS2DB3	GS2S3
GS1AV33	GS2AH104	GS2DB4	GS2S4
GS1AV54	GS2AH106	GS2EEU3	GS2SB3
GS1AV73	GS2AH110	GS2EU3N	GS2SB4
GS1AW303	GS2AH120	GS2F3	GS2SG3
GS1AW306	GS2AH130	GS2F4	GS2SG4
GS1AW33	GS2AH140	GS2FG3	GS2SU3
GS1AW34	GS2AH150	GS2FG4	GS2TB3
GS1AW403	GS2AH160	GS2G3	GS2TB4
GS1AW406	GS2AH170	GS2G4	GS2TU3
GS1AW43	GS2AH180	GS2GB3	GS2V3
GS1AW44	GS2AH210	GS2GB4	GS2V4
GS1AW503	GS2AH215	GS2GG3	GS2VG3
GS1AW606	GS2AH220	GS2GG4	
GS1AW903	GS2AH230	GS2GU3N	
GS1DD3	GS2AH235	GS2J3	
GS1DD4	GS2AH240	GS2J4	
GS1DDB3	GS2AH250	GS2JB3	
GS1DDB4	GS2AH260	GS2JB4	

This document is current. Click on the product reference to get the most recent availability status (hyperlink to **se.com** product datasheet).
If your product variant is no longer available, please consult your distributor or regional sales office.

Switch-disconnector fuses

Technical Data for Designers

Contents

Characteristics:
> switch-disconnector fuses.... B5/18 to B5/23
> auxiliary contacts B5/24
Dimensions ..... B5/25 to B5/33
Schemes.....B5/33

IEC - For NFC / DIN fuses - From 32 to 1250 A

Switch-disconnector-fuse characteristics

Type				GS1DD	GS•F	GS•G	GS•J
Environment							
Conforming to standards	Switch-disconnector fuses			IEC 60947-3			
	Fuses			IEC 60269-1 and 2			
Product certifications				ASEFA/LOVAG, LROS, UKCA			
Degree of protection conforming to IEC 60529	On front panel with terminal covers			IP 20			
Ambient air temperature around the device	Storage		°C	-40…+80			
	Operation		°C	-20…+70			
Flame resistance conforming to IEC 60695-2-1	Body		°C	960	960		
	Fuse cover		°C	–	850		
Pole characteristics							
Conventional thermal current (Ith) for ambient temperature ≤ 40 °C			A	32	50	63	100
Fuse size				10 x 38	14 x 51	T00C	22 x 58
Power dissipated per 1 pole			W	1.20	2.45	4.35	6.80
Maximum fuse dissipation allowed per 1 pole			W	2.90	4.60	6.00	9.00
Rated insulation voltage (Ui)			V	800	750	750	750
Rated impulse withstand voltage (Uimp)			kV	8	8	8	8
Rated operational current (Ie)	Cat. AC-23A/B (1)	∼ 400 V	A	32	50	63	100
		∼ 500 V	A	32	50	63	100
		∼ 690 V	A	32	50	63	100 (3)
	Cat. DC-23A/B (1)	⎓ 440 V (2)	A	20	40	40	100
Rated operational power	Cat. AC-23A/B (1)	∼ 400 V	kW	15	25	30	51
		∼ 500 V	kW	18.5	33	40	63
		∼ 690 V	kW	25	45	55	90
Rated conditional short-circuit current	I rms at ∼ 400 V with protection by gG (gl) fuses		kA	100	100	100	100
	Rating of associated fuses		A	32	50	63	100
Peak value of permissible current (dynamic short-circuit withstand)	Conforming to IEC 60269-1	∼ 400 V	kA	5.5	7.6	10.6	20
Rated making capacity	I rms at 400 V Cat. AC-23B		A	320	500	630	1000
Rated breaking capacity	I rms at 400 V Cat. AC-23B		A	256	400	500	800
Mechanical durability	Number of operating cycles			20000	10000	10000	10000
Electrical durability	Number of operating cycles cat. AC/DC-23A/B (1)			1500/300	1500/300	1500/300	1500/300
Cabling	Cable (c.s.a. min/max)		mm²	2.5/16	6/25	10/25	25/95
	Bars (max width)		mm	–	–	–	20
Tightening torque			N.m	3	3.2	3.2	12

(1) Category "A": frequent operating cycles, category "B": infrequent operating cycles.
(2) 2 poles in series per phase.
(3) With terminal covers.
(4) Poles not juxtaposed.

References: pages B5/4 and B5/5
Dimensions: pages B5/25 to B5/29
Schemes: page B5/33

	GS•K	GS•KK	GS•LL	GS•L	GS•N	GS•QQ	GS2S	GS2V
	IEC 60947-3							
	IEC 60269-1 and 2							
	ASEFA/LOVAG, LROS, UKCA							
	IP 20							
	-40…+80							
	-20…+70							
	960							
	850							
	125	125	160	160	250	400	630	1250
	22 x 58	T00	T00	T0	T1	T2	T3	T4
	8.63	6.00	10.40	10.40	19.00	24.40	61.00	154.00
	11.00	12.00	12.00	15.00	23.00	33.00	60.00	110.00
	750	750	750	750	750	800	1000	1000
	8	8	8	8	8	8	12	12
	125	125	160	160	250	400	630	1000
	125	125	160	160	250	315	500	800
	100 (3)	100 (3)	125 (3)	125 (3)	250 (3)	250/315	315/400	630
	100	100	125	125	200	200/315 (4)	400/630 (4)	1000
	63	63	80	80	132	220	355	560
	90	90	110	110	160	220	355	560
	80	80	110	110	220	220/295	295/400	400/475
	100	100	100 (50)	100	100	50	100	100
	125	125	125 (160)	160	250	400	630	1250
	20	20	22.7	20	32.5	40	70	90
	1250	1250	1600	1600	2500	4000	6300	10 000
	1000	1000	1280	1280	2000	3200	5040	8000
	10000	10000	10000	10000	10000	10000	8000	5000
	1000/200	1000/200	1000/200	1000/200	1000/200	1000/200	1000/200	500/100
	35/95	35/95	50/95	50/95	95/240	185/240	2 x 150 / 2 x 300	- / 4 x 185
	20	20	20	20	32	45	63	80
	12	12	12	12	25	25	44	44

References:
pages B5/4 and B5/5

Dimensions:
pages B5/25 to B5/29

Schemes:
page B5/33

IEC - For BS fuses - From 32 to 1250 A

Switch-disconnector-fuse characteristics

Type			GS1DDB	GS2DB	GS2GB	GS2JB
Environment						
Conforming to standards	Switch-disconnector fuses		IEC 60947-3			
	Fuses		IEC 60269-1 and 2			
Product certifications			ASEFA/LOVAG, LROS, UKCA			
Degree of protection conforming to IEC 60529	On Front panel, with terminal covers		IP 20			
Ambient air temperature around the device	Storage	**°C**	-40…+80			
	Operation	**°C**	-20…+70			
Flame resistance conforming to IEC 60695-2-1	Body	**°C**	960			
	Fuse cover	**°C**	–		850	
Pole characteristics						
Conventional thermal current (Ith) for ambient temperature ≤ 40 °C		**A**	32	32	63	100
Fuse size			A1	A1	A2-A3	A4 Ø ≤ 31 mm
Power dissipated per 1 pole		**W**	1.20	1.20	4.35	3.70
Maximum fuse dissipation allowed per 1 pole		**W**	3.10	3.10	3.80	8.60
Rated insulation voltage (Ui)		**V**	800	750	750	750
Rated impulse withstand voltage (Uimp)		**kV**	8	8	8	8
Rated operational current (Ie)	Cat. AC-23A/B (1) ∼ 400 V	**A**	32	32	63	100
	∼ 500 V	**A**	32	32	63	100
	∼ 690 V	**A**	32	32	63	100 (4)
	Cat. DC-23A/B (1) ⎓ 440 V (2)	**A**	20	20	40	100
Rated operational power	Cat. AC-23A/B (1) ∼ 400 V	**kW**	15	15	30	51
	∼ 500 V	**kW**	18.5	18.5	40	63
	∼ 690 V	**kW**	25	25	55	90
Rated conditional short-circuit current	I rms at ∼ 400 V with protection by gG (gl) fuses	**kA**	80	80	80	80
	Rating of associated fuses	**A**	32	32	63	100
Peak value of permissible current (dynamic short-circuit withstand)	Conforming to IEC 60269-1 ∼ 400 V	**kA**	5.5	9	10.6	20
Rated making capacity	I rms at 400 V Cat. AC-23B	**A**	320	320	630	1000
Rated breaking capacity	I rms at 400 V Cat. AC-23B	**A**	256	256	500	800
Mechanical durability	Number of operating cycles		20000	10000	10000	10000
Electrical durability	Number of operating cycles cat. AC/DC-23A/B (1)		1500/300	1500/300	1500/300	1500/300
Cabling	Cable (c.s.a. min/max)	**mm²**	2.5/16	6/25	10/25	25/95
	Bars (max width)	**mm**	–	–	–	20
Tightening torque		**N.m**	3	3.2	3.2	12

(1) Category "A": frequent operating cycles, category "B": infrequent operating cycles.
(2) 2 poles in series per phase.
*(3) Fit switch-disconnector fuses **GS2LB** with B1 or B2 fuses and **GS2LLB** with A4 fuses.*
(4) With terminal covers.
(5) Poles not juxtaposed.

References: pages B5/6 and B5/7
Dimensions: pages B5/25 to B5/29
Schemes: page B5/33

	GS2LB or LLB [3]	GS2MMB	GS2NB	GS2PPB	GS2QQB	GS2SB	GS2TB	GS2VB
	IEC 60947-3							
	IEC 60269-1 and 2							
	ASEFA/LOVAG, LROS, UKCA							
	IP 20							
	-40…+80							
	-20…+70							
	960							
	850							
	160	200	250	315	400	630	800	1250
	B1-B2 or A4 [3]	B1-B2	B1…B3	B1…B3	B1…B4	C1-C2	C1…C3	D1
	11.20 or 9.70	8.80	13.80	17.00	24.40	61.00	68.00	154.00
	13.40 or 15.30	14.30	19.70	29.60	29.60	55.00	70.00	100.00
	750	750	750	800	800	1000	1000	1000
	8	8	8	8	8	12	12	12
	160	200	250	315	400	630	800	1000
	160	200	250	315	315	500	630	800
	125 [4]	200/160 [4]	250 [4]	250/315 [4]	250/315	315/400	630	630
	125	200	200	200	200/315 [5]	400/630 [5]	800	1000
	80	100	132	150	220	355	450	560
	110	140	160	220	220	355	450	560
	110	150/185	220	220/295	220/295	295/400	400	400/475
	80	80	80	80	50	80	80	80
	160	200	250	315	400	630	800	1250
	22.7	32.5	32.5	40	40	70	80	90
	1600	2000	2500	3150	4000	6300	8000	10 000
	1280	1600	2000	2520	3200	5040	6400	8000
	10000	10000	10000	10000	10000	8000	8000	5000
	1000/200	1000/200	1000/200	1000/200	1000/200	1000/200	500/100	500/100
	50/95	95/240	95/240	185/240	185/240	2 x 150 / 2 x 300	2 x 185 / 2 x 300	- / 4 x 185
	20	32	32	45	45	63	63	80
	12	25	25	25	25	44	44	44

References:
pages B5/6 and B5/7
Dimensions:
pages B5/25 to B5/29
Schemes:
page B5/33

UL, CSA, IEC - For CC and J fuses - From 32 to 800 A

Switch-disconnector-fuse characteristics

Type				GS1DDU3	GS1DU3	GS2EEU3	GS2EU3N
Environment							
Conforming to standards	Switch-disconnector fuses			UL 489, CSA 22.2 n°5, IEC 60947-3		UL 98, UL 248, CSA 22.2 n°4, IEC 60947-3	
	Fuses			UL 248			
Degree of protection conforming to IEC 60529	With terminal covers			IP 20			
Ambient air temperature around the device	Storage		°C	-40…+80			
	Operation		°C	-20…+70			
Flame resistance conforming to IEC 60695-2-1	Body		°C	960	960	960	
	Fuse cover		°C	–	–	850	
Pole characteristics							
Conventional thermal current (Ith) for ambient temperature ≤ 40 °C			A	30	30	30	30
Fuse size				CC	J	CC	J
Rated insulation voltage (Ui)			V	800	800	750	750
Rated impulse withstand voltage (Uimp)			kV	8	8	8	8
Rated operational current (Ie)	Cat. AC-23A/B (1)	∼ 400 V	A	32	32	32	32
		∼ 500 V	A	32	32	32	32
		∼ 690 V	A	32	32	32	32
Rated operational power	Cat. AC-23A/B (1)	∼ 400 V	kW	15	15	15	15
		∼ 500 V	kW	18.5	18.5	18.5	18.5
		∼ 690 V	kW	25	25	25	25
Prospective short-circuit current withstand	Conforming to UL 98 / UL 489	∼ 600 V	kA	100	100	200	200
Peak value of permissible current (dynamic short-circuit withstand)	Conforming to IEC 60269-1	∼ 400 V	kA	5.5	5.5	7.6	17.6
Rated making capacity	I rms at 400 V Cat. AC-23B		A	300	300	300	300
Rated breaking capacity	I rms at 400 V Cat. AC-23B		A	240	240	240	240
Mechanical durability	Number of operating cycles			10000	10000	10000	10000
Electrical durability	Number of operating cycles Cat. AC/DC-23A/B (1)			1500/300	1500/300	1500/300	1500/300
Cabling	Cable (c.s.a. min/max)		mm^2	2.5/6	2.5/6	2.5/6	2.5/16
			AWG	#14/#10	#14/#10	#14/#10	#14/#6
	Bars (max width)		mm	-	-	-	-
Tightening torque			N.m	3 (for wire)	4 (for wire)	5.5 (for wire)	3.5 (for wire)
			lb-in	27	27	48	31

(1) Category "A": frequent operating cycles, category "B": infrequent operating cycles.

Ref.
Switch-disconnector fuses

	GS2GU3N	GS2JU3N	GS2MU3N	GS2QU3N	GS2SU3	GS2TU3
	UL 98, CSA 22.2 n°4, IEC 60947-3					
	UL 248					
	IP 20					
	-40…+80					
	-20…+70					
	960					
	850					
	60	100	200	400	600	800
	J	J	J	J	J	L
	750	750	750	800	1000	1000
	8	8	8	8	12	12
	63	100	200	400	630	800
	63	100	200	315	630	630
	63	100	200	250	630	630
	30	51	100	220	355	450
	40	63	140	220	450	560
	55	90	185	220	600	600
	100	200	200	200	200	200
	17.6	22	32	36	80	80
	600	1000	2000	4000	6000	8000
	480	800	1600	3200	4800	6400
	10000	10000	8000	6000	5000	5000
	1500/300	1500/300	1000/200	1000/200	1000/200	500/100
	2.5/16	4/50	16/150	25/300	2 x 150	–
	#14/#6	#12/#1	#6/300 Kcmil	#4/600 Kcmil	#2/600 Kcmil	–
	-	20	32	45	100	100
	3.5 (for wire)	4 (for wire)	18 (for lug)	35 (for lug)	35 (for lug)	35 (for lug)
	31	35.4	160	310	310	310

References:
pages B5/8 and B5/9
Dimensions:
pages B5/30 to B5/32
Schemes:
page B5/33

Auxiliary contacts

GS1AM●11, GS1AM1 and GS1AM2 early break and signalling contact characteristics			
Conventional thermal current (Ith) for ambient temperature ≤ 40 °C		**A**	16
Rated operational current (Ie)	Cat. AC-15	**A**	127 V: 5 - 230 V: 4 - 400 /415 V: 3 - 440 V: 2
	Cat. DC-13	**A**	24 V: 12 - 48 V: 2 - 110 V: 0.6 - 220 V: 0.4
Durability	Number of operating cycles		Mechanical: 1000000 Electrical: cat. AC-15: 30000
Fuse protection	gG	**A**	6 max
Cabling		**mm**	Faston connectors: 1 x 6.35 or 2 x 2.8

GS1AN and GS1ANT signalling contact characteristics			
Conventional thermal current (Ith) for ambient temperature ≤ 40 °C		**A**	20
Rated operational current (Ie)	Cat. AC-15	**A**	127 V: 12 - 230 V: 10 - 400/415 V: 8 - 440 V: 6
	Cat. DC-13	**A**	48 V: 4 - 110 V: 1.2 - 220 V: 1
Durability	Number of operating cycles		Mechanical: 30000 Electrical: cat. AC-15: 30000
Fuse protection	gG	**A**	16 max
Cabling	Cable (c.s.a. min/max)	**mm²**	Min: 1.5 - max: 10

GS1AM110 and GS1AM101 early break and signalling contact characteristics			
Conventional thermal current (Ith) for ambient temperature ≤ 40 °C		**A**	10
Rated operational current (Ie)	Cat. AC-15	**A**	120 V: 6 - 240 V: 3 - 400 V: 1.8 - 480 V: 1.5
	Cat. DC-13	**A**	24 V: 2.8 - 48 V: 1.4 - 125 V: 0.55 - 250 V: 0.27 - 400 V: 0.15
Durability	Number of operating cycles		Mechanical: 5000000 Electrical: cat. AC-15: 1000000
Cabling	Cable (c.s.a. min/max)	**mm²**	Min: 1 x 0.22 - max: 2 x 2.5

GS●AF "blown fuse" signalling contact characteristics			
Conventional thermal current (Ith) for ambient temperature ≤ 40 °C		**A**	16
Rated operational current (Ie)	Cat. AC-15	**A**	230 V: 4 - 400 V: 3
	Cat. DC-13	**A**	24 V: 12 - 48 V: 2 - 110 V: 0.6 - 220 V: 0.4
Durability	Number of operating cycles		Mechanical: 30000 Electrical: cat. AC-15: 30000
Cabling		**mm**	Faston connectors: 1 x 6.35

References:
page B5/12
Dimensions:
page B5/33
Schemes:
page B5/33

Dimensions

IEC - GS1●● (32 A) Switch-disconnector-fuse

Direct front-mounted operator

GS1DD

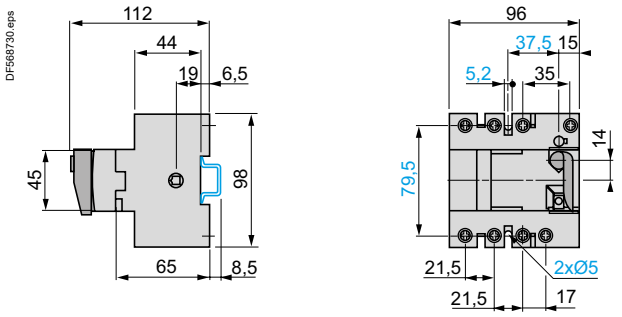

GS1DDB

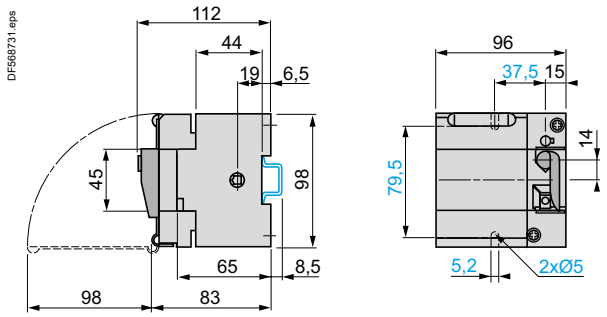

External front-mounted operator

GS1DD

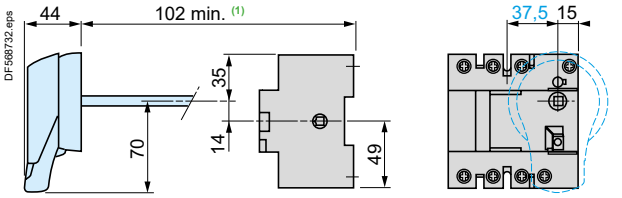

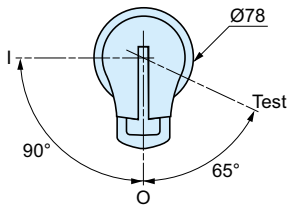

Door cut-out

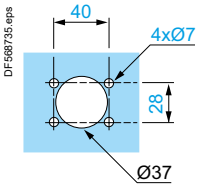

GS1DDB

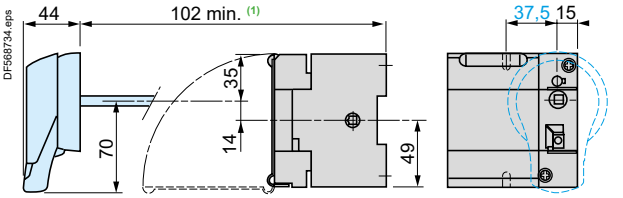

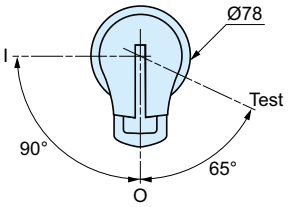

Door cut-out

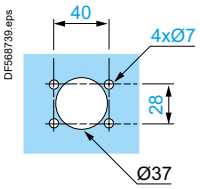

(1) With 1 or 2 auxiliary contacts GS1AM1●●: 130 mm.
(2) With 3 or 2 auxiliary contacts GS1AM1●●: 155 mm.

External right-hand side-mounted operator

GS1DD

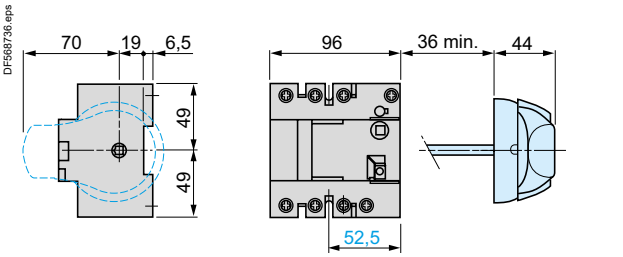

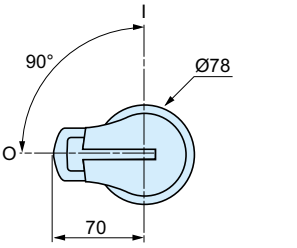

Door cut-out

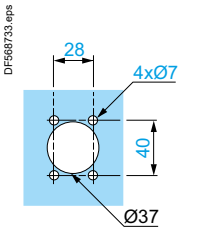

GS1DDB

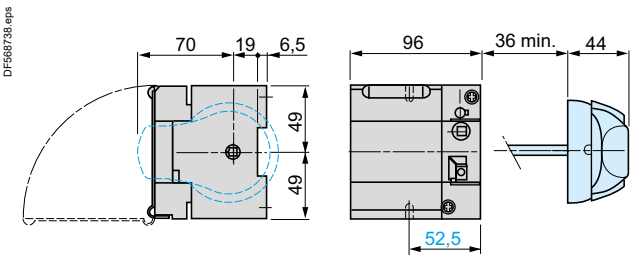

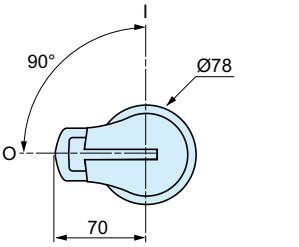

Door cut-out

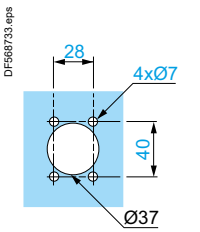

References:
pages B5/4 and B5/5

Characteristics:
pages B5/18 and B5/19

Schemes:
page B5/33

Dimensions

IEC - GS1●● (50...400 A) Switch-disconnector-fuse

Direct right-hand side-mounted operator

GS1FD (50 A), GD (63 A), JD (100 A), KD, KKD (125 A), LD, LLD (160 A), ND (250 A) and QQD (400 A)

DF538732.eps

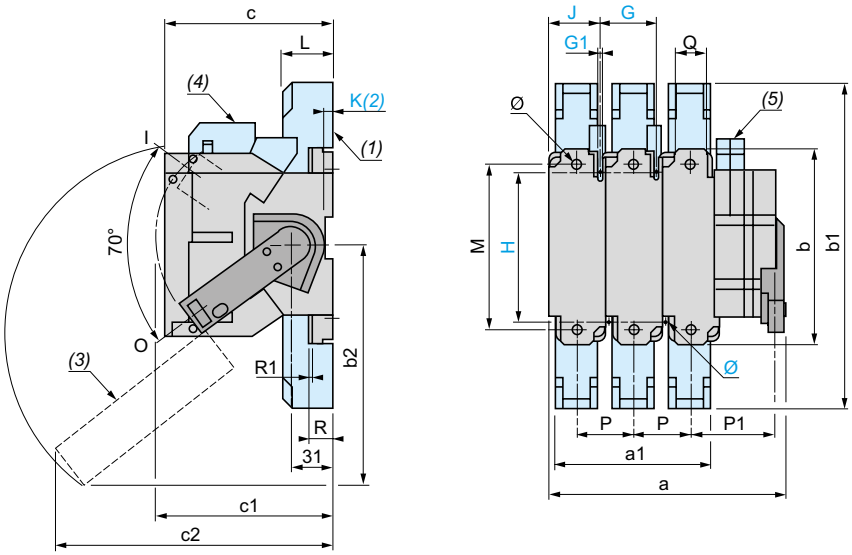

GS1		a	a1	b	b1	b2	c	c1	c2	G	G1	H	J	K	Ø	L	M	P	P1	Q	R	R1	Ø
FD	**3P**	118	–	118	–	–	87	134	–	27	5.4	106	31	6.5	5	–	–	27	33.5	–	–	–	–
	4P	145	–	118	–	–	87	134	–	27	5.4	106	31	6.5	5	–	–	27	33.5	–	–	–	–
GD	**3P**	133	–	118	–	159	116.5	134	145	32	5.4	106	36	6.5	5	–	–	32	36	–	–	–	–
	4P	165	–	118	–	159	116.5	134	145	32	5.4	106	36	6.5	5	–	–	32	36	–	–	–	–
JD, KD	**3P**	150	108	162	268	–	116	173	–	36	5.4	127	40	–	5	44	141	36	38	20	19.5	2.5	8.5
	4P	186	144	162	268	–	116	173	–	36	5.4	127	40	–	5	44	141	36	38	20	19.5	2.5	8.5
KKD, LLD	**3P**	150	108	162	268	141	126.5	173	193	36	5.4	127	40	–	5	44	141	36	38	20	19.5	2.5	8.5
	4P	186	144	162	268	141	126.5	173	193	36	5.4	127	40	–	5	44	141	36	38	20	19.5	2.5	8.5
LD	**3P**	192	136	162	268	174	136.5	173	229	50	5.4	140	54	–	5	44	141	50	45	20	19.5	2.5	8.5
	4P	242	172	162	268	174	136.5	173	229	50	5.4	140	54	–	5	44	141	50	45	20	19.5	2.5	8.5
ND	**3P**	253	180	195	345	185	146	173	251	60	6.4	162	64	–	6	65	166	60	81	32	19.5	2.5	11
	4P	313	240	195	345	185	146	173	251	60	6.4	162	64	–	6	65	166	60	81	32	19.5	2.5	11
QQD	**3P**	271	192	205	355	200	149	173	260	66	6.4	172	70	–	6	65	175	66	86	50	20	3	11
	4P	337	258	205	355	200	149	173	260	66	6.4	172	70	–	6	65	175	66	86	50	20	3	11

(1) Terminal cover.
(2) Mounting on ⊥ rail only for GS1FD and GS1GD (50 and 63 A).
(3) Protective screen, lockable in I position.
(4) 1 or 2 auxiliary contacts GS1AF●●.
(5) 1 or 2 auxiliary contacts GS1AM●.

Ref.
Switch-disconnector fuses

Dimensions

IEC - GS2●● (32...400 A) Switch-disconnector-fuse

External front and right-hand side-mounted operator

GS2DB (32 A), F (50 A), G, GB, JB (63 A), J (100 A), K, KK (125 A), L, LL, LB, LLB (160 A), MMB (200 A), N, NB (250 A), PPB (315 A), QQ and QQB (400 A)

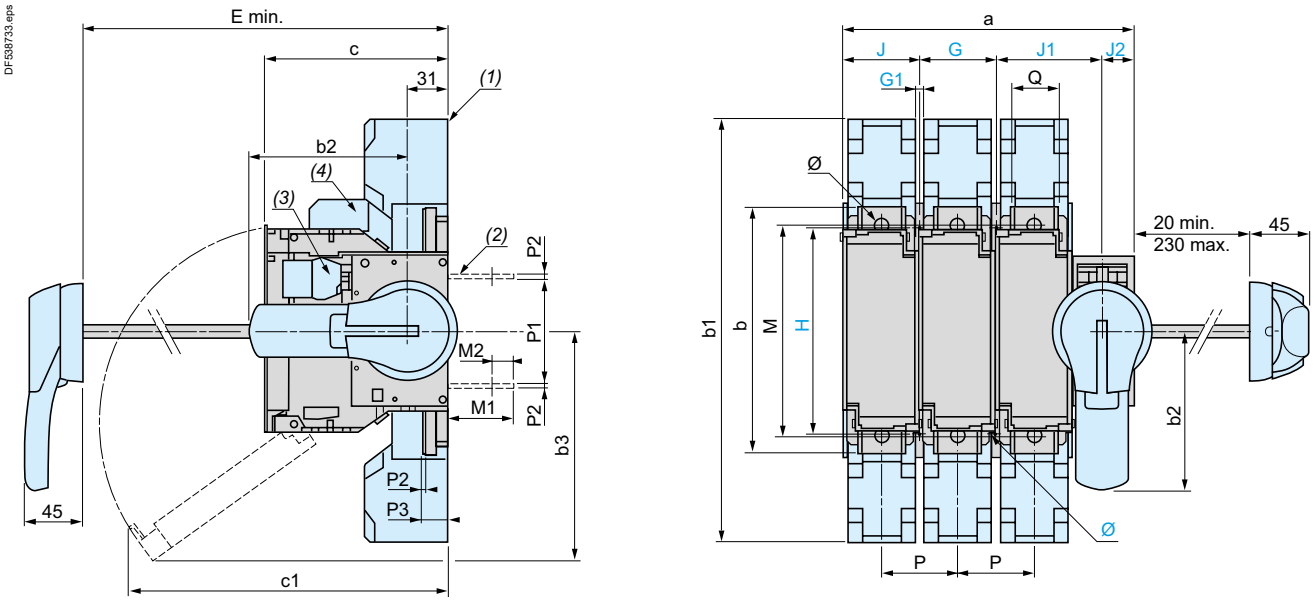

GS2		a	b	b1	b2	b3	c	c1	E min.	G	G1	H	J	J1	J2	Ø	M	M1	M2	P	P1	P2	P3	Q	Ø
F, DB	3P	121	118	–	70	85	87 (5)	153	100 (5)	27	5.4	106	31	45	18	5	–	15	6	27	59	2	–	12	–
	4P	148	118	–	70	85	87 (5)	153	100 (5)	27	5.4	106	31	45	18	5	–	15	6	27	59	2	–	12	–
G, GB	3P	136	118	–	70	159	116.5 (6)	145	125	32	5.4	106	36	50	18	5	–	15	6	32	59	2	–	12	–
	4P	168	118	–	70	159	116.5 (6)	145	125	32	5.4	106	36	50	18	5	–	15	6	32	59	2	–	12	–
J, JB, K	3P	148	162	268	125	141	116 (6)	187	135	36	5.4	127	40	54	18	5	141	41	8	36	62	2.5	19.5	20	8.5
	4P	184	162	268	125	141	116 (6)	187	135	36	5.4	127	40	54	18	5	141	41	8	36	62	2.5	19.5	20	8.5
KK, LL	3P	148	162	268	125	141	126.5 (6)	193	135	36	5.4	127	40	54	18	5	141	41	8	36	62	2.5	19.5	20	8.5
	4P	184	162	268	125	141	126.5 (6)	193	135	36	5.4	127	40	54	18	5	141	41	8	36	62	2.5	19.5	20	8.5
L, LB, LLB	3P	190	162	268	125	174	136.5	229	145	50	5.4	140	54	64	18	5	141	41	8	50	62	2.5	19.5	20	8.5
	4P	240	162	268	125	174	136.5	229	145	50	5.4	140	54	64	18	5	141	41	8	50	62	2.5	19.5	20	8.5
MMB, NB, N	3P	234	195	345	125	185	146	251	154	60	6.4	162	64	86	25	6	166	52	17	60	84	2.5	19.5	32	11
	4P	294	195	345	125	185	146	251	154	60	6.4	162	64	86	25	6	166	52	17	60	84	2.5	19.5	32	11
PPB, QQB, QQ	3P	252	205	355	125	200	149	260	157	66	6.4	172	70	91	25	6	175	54	14.5	66	84	3	20	50	11
	4P	318	205	355	125	200	149	260	157	66	6.4	172	70	91	25	6	175	54	14.5	66	84	3	20	50	11

(1) Terminal cover.
(2) Rear access connector plates (option).
(3) 1 to 8 auxiliary contacts GS1AM1●●.
(4) 1 or 2 auxiliary contacts GS1AF●●.
(5) 1 auxiliary contact GS1AM1●●: + 23.5 mm, 2 auxiliary contacts GS1AM1●●: + 47 mm.
(6) 132 mm with 2 auxiliary contacts GS1AM1●●.

Door cut-out

For external front-mounted operator

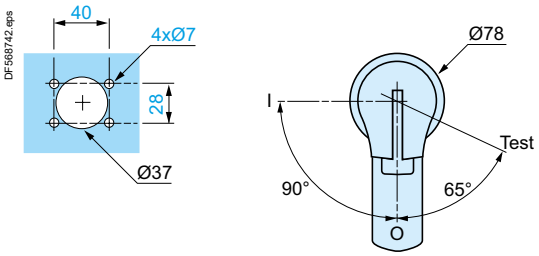

For external right-hand side-mounted operator

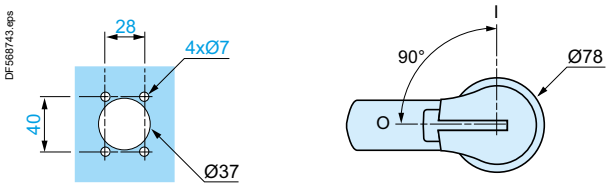

References:
pages B5/6 and B5/7

Characteristics:
pages B5/20 and B5/21

Schemes:
page B5/33

Dimensions

IEC - GS2●● (630...1250 A) Switch-disconnector-fuse

Direct front-mounted operator

GS2S, SB (630 A), TB (800 A), V and VB (1250 A)

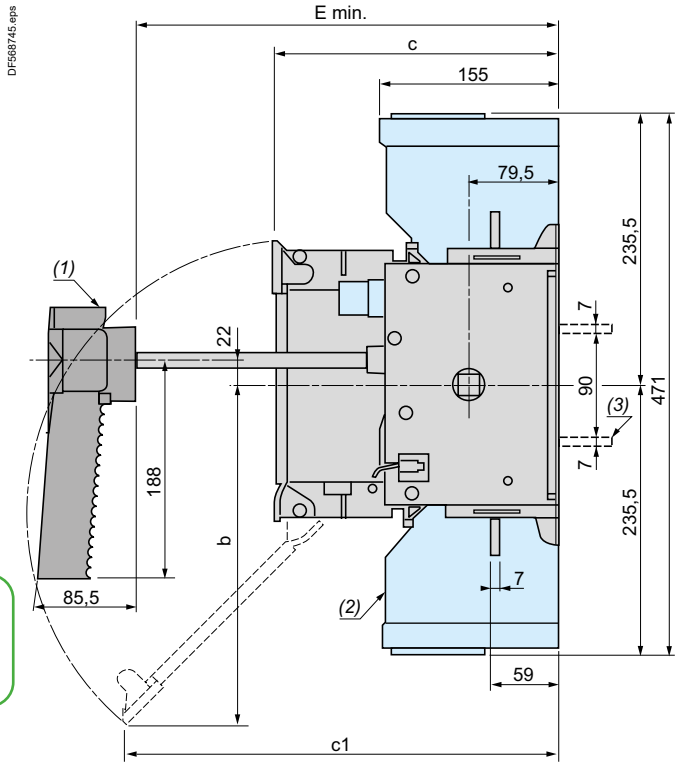

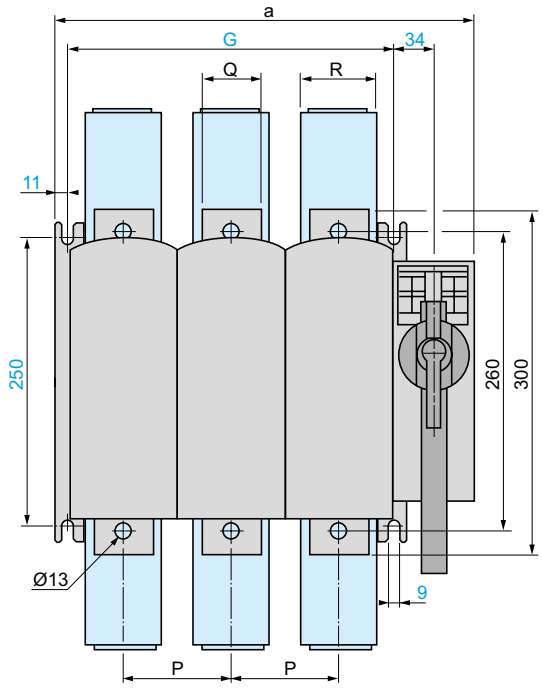

GS2		a	b	c	c1	E min.	G	P	Q	R
S, SB, TB	3P	364	300	250	380	265	284	94	51	65
	4P	458	300	250	380	265	378	94	51	65
V, VB	3P	442	355	289	295	304	362	120	77	88
	4P	562	355	289	295	304	482	120	77	88

(1) Handle GS2AH104 for GS2S, GS2SB and GS2TB.
(2) Terminal cover.
(3) Rear access connector plates (GS2V and GS2VB).

Handle GS2AH105 for GS2V and GS2VB (direct front-mounted operator)

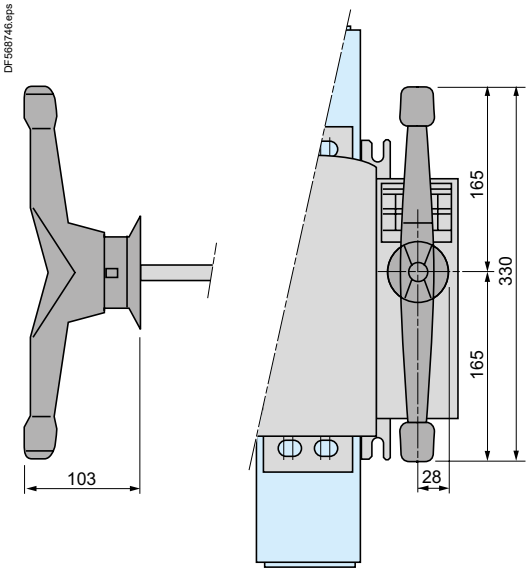

Connector plates for GS2V and GS2VB

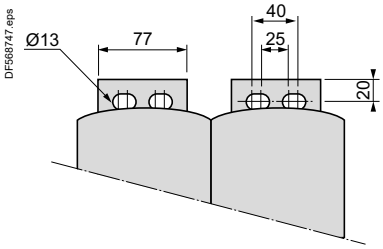

References:
page B5/5
Characteristics:
pages B5/19 to B5/21
Schemes:
page B5/33

Dimensions

IEC - GS2●● (630...1250 A) Switch-disconnector-fuse

External front and right-hand side-mounted operator

GS2S, SB (630 A), TB (800 A), V and VB (1250 A)

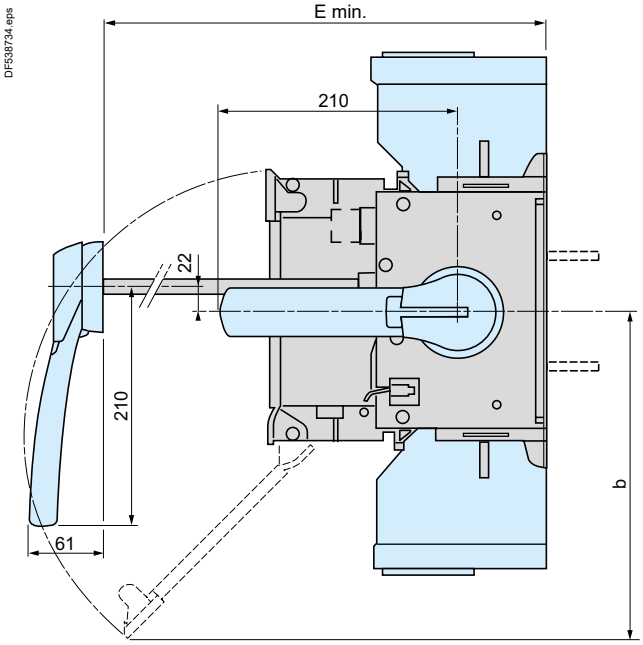

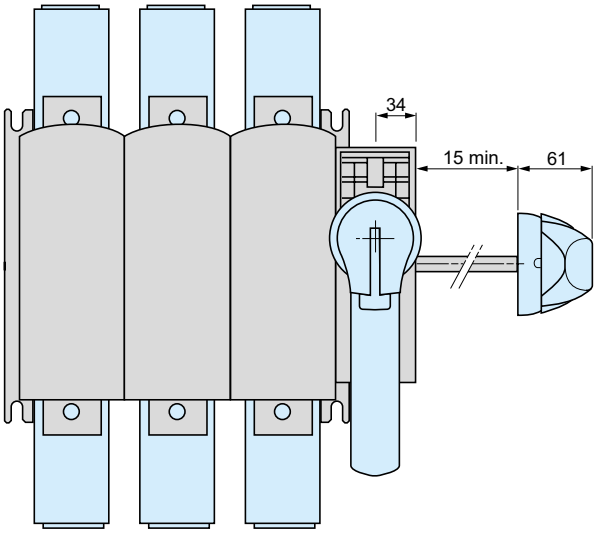

GS2		b	E min.
S, SB, TB	3P	297	265
	4P	297	265
V, VB	3P	350	304
	4P	350	304

Handle GS2AH570 or GS2AH580 for GS2V and GS2VB (external front-mounted operator)

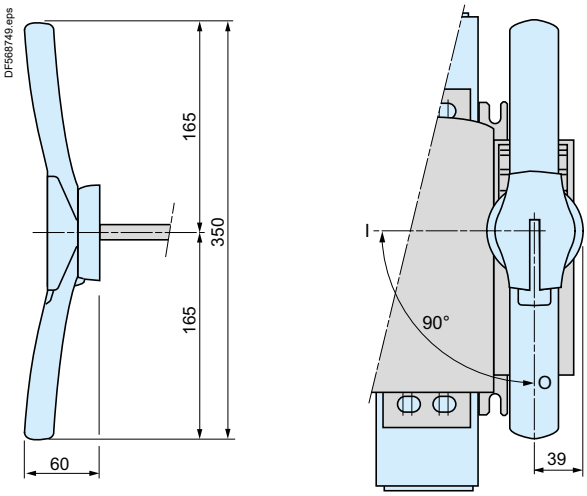

Door cut-out

For external front-mounted operator

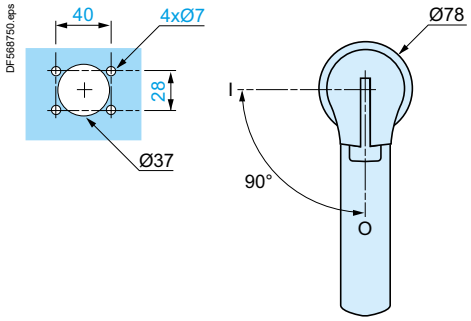

For external right-hand side-mounted operator

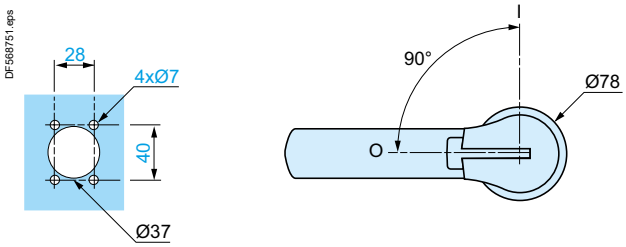

References:
page B5/5

Characteristics:
pages B5/19 to B5/21

Schemes:
page B5/33

Dimensions

UL, CSA, IEC - GS1●● GS2●● Switch-disconnector fuses (30 and 60 A)

GS1DU3 (30 A) class CC fuses, GS1DDU3 (30 A) class J fuses

DB417416.eps

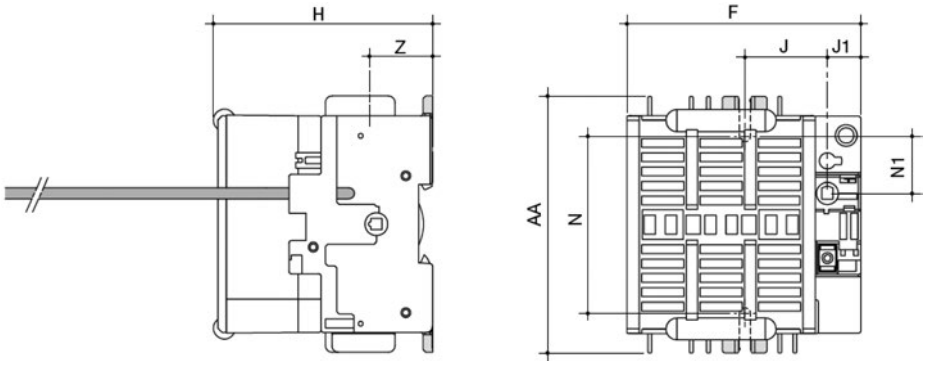

Rating	F	H	J	J1	N	N1	AA	Z
30 / CC	96	83.5	37.5	15	79.5	25.5	116	28.5
30 / J	105	99	37.5	15	79.5	25.5	116	28.5

GS2EEU3 (30 A) class CC fuses

DB417417.eps

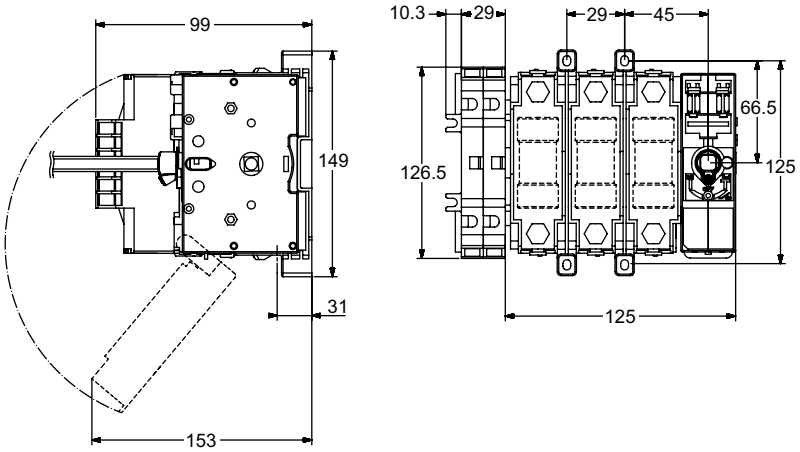

GS2EU3N, GS2GU3N (60 A) class J fuses

DB417418.eps

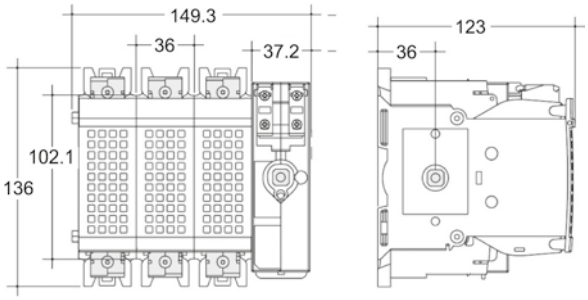

Accessories

Handle for 30 and 60 A switch-disconnector fuses

External front handle | **Door cut-out** | **External side handle** | **Door cut-out**

DF568732.eps

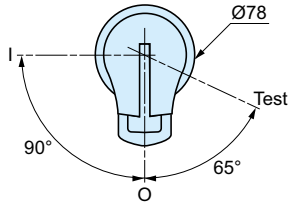

DF568735.eps

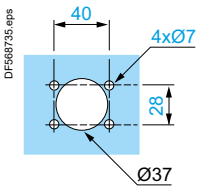

DF568736.eps

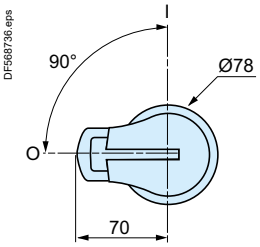

DF568733.eps

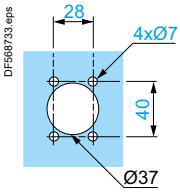

References:
pages B5/8 and B5/9

Characteristics:
pages B5/22 and B5/23

Schemes:
page B5/33

Life Is On Schneider Electric

Dimensions

UL, CSA, IEC - GS2●● Switch-disconnector fuses (100 and 400 A)

GS2JU3N (100 A) class J fuses

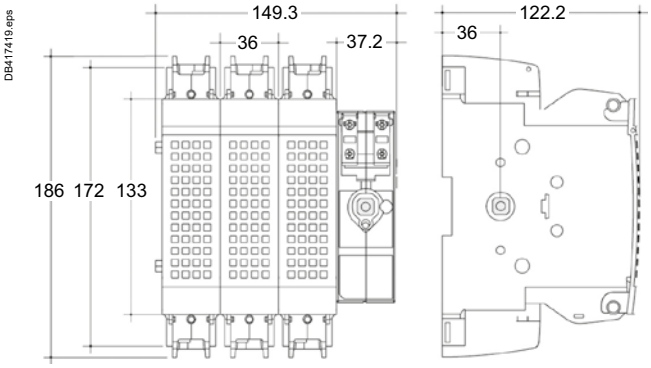

GS2MU3N (200 A) class J fuses

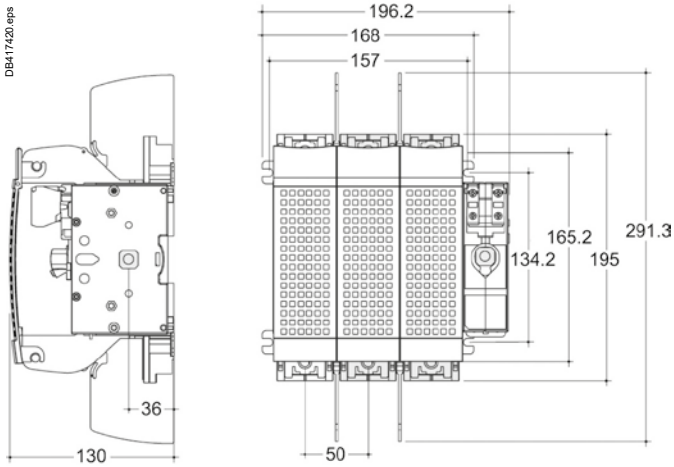

GS2QU3N (400 A) class CC fuses

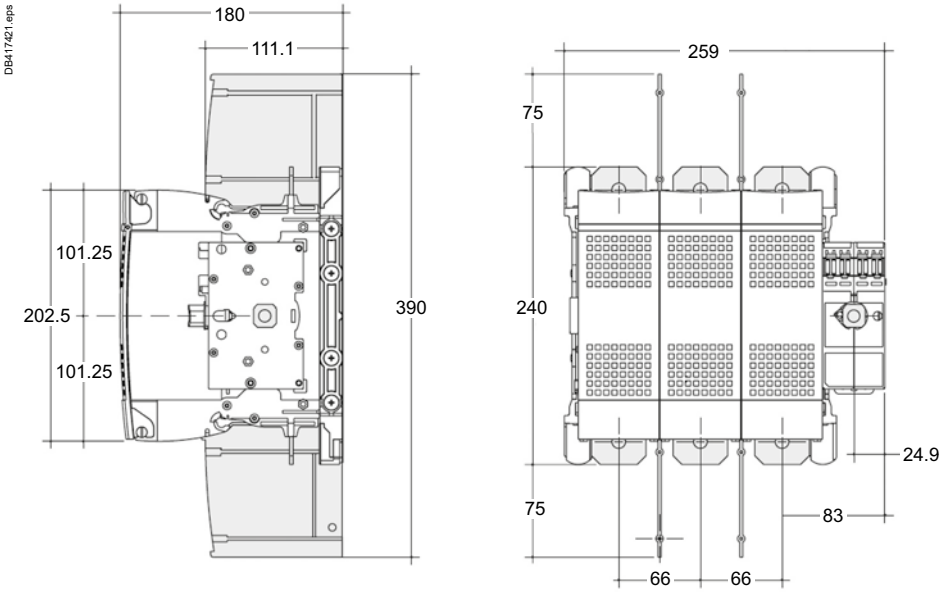

Accessories

Handle for 100, 200 and 400 A switch-disconnector fuses

For external front-mounted operator

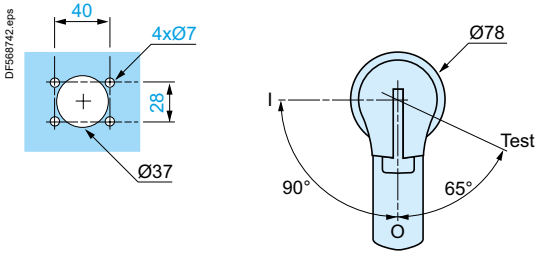

For external right-hand side-mounted operator

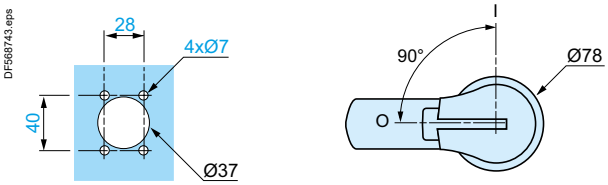

Ref.
Switch-disconnector fuses

References:
pages B5/8 and B5/9

Characteristics:
pages B5/22 and B5/23

Schemes:
page B5/33

UL, CSA, IEC - GS2●● Switch-disconnector fuses (600 and 800 A)

GS2SU3 (600 A), GS2TU3 (800 A) class J fuses

DB417422.eps

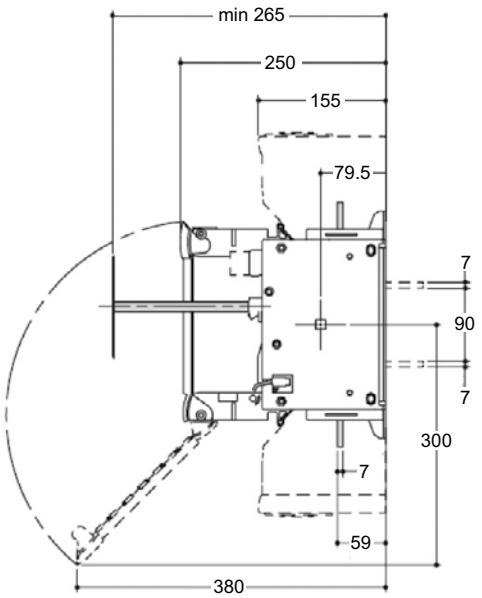

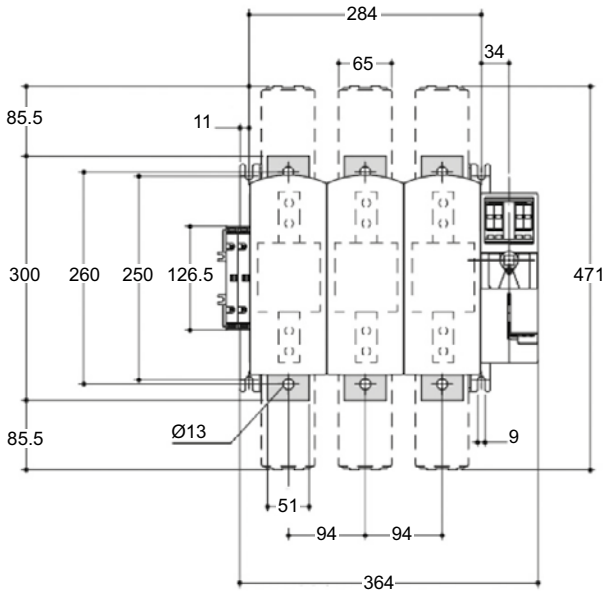

Accessories

Handle for 600 and 800 A switch-disconnector fuses

For external front-mounted operator

DF568750.eps

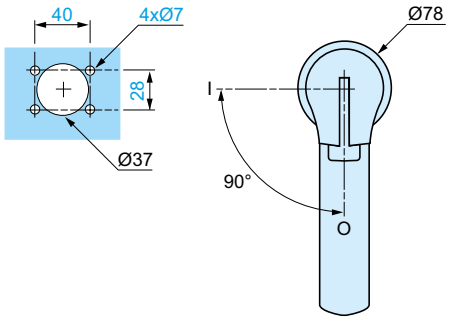

For external right-hand side-mounted operator

DF568751.eps

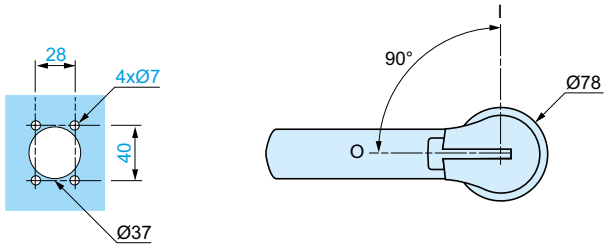

Dimensions, schemes

Auxiliary contacts

GS1AM111, GS1AM211

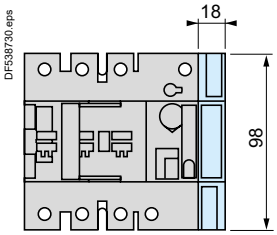

GS1AM110, GS1AM101

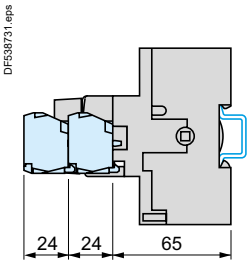

Schemes

3-pole GS

32 to 1250 A

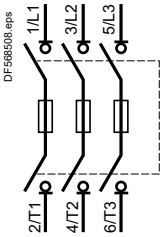

4-pole GS

32 A

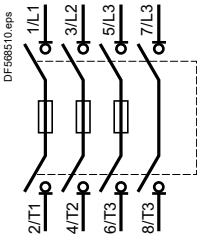

50 to 1250 A

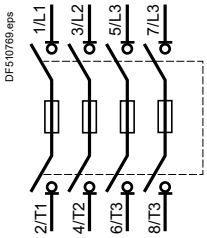

Auxiliary contacts

GS1AM110

1 N/O

GS1AM101

1 N/C

GS1AM111 and GS1AM1

1 C/O

GS1AM211 and GS1AM2

2 C/O

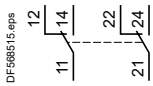

GS1AN●●

1 N/C + 1 N/O

2 N/C + 2 N/O

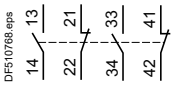

GS1AF●

1 C/O

2 C/O

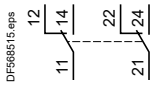

Ref.
Switch-disconnector fuses

References:
page B5/12

Characteristics:
page B5/24

TeSys Power
Deca, Giga and Modular
Motor circuit breakers

TeSys Power - Deca, Giga Motor circuit breakers

Type of product	Range (400/415 V AC)		Pages
Introduction			B6/3
TeSys Deca Frame 2 - Motor circuit breakers Magnetic, Thermal-magnetic (Product ref. GV2L, GV2LE, GV2P, GV2ME)	0.06 or 15 kW		B6/11
TeSys Deca Frame 2 - Motor circuit breakers Thermal-magnetic - delayed tripping - For high current peak motors or 3-phase transformers (Product ref. GV2RT) Add-on blocks, accessories (for TeSys Deca Frame 2 circuit breakers)	0.09 or 11 kW		B6/18
TeSys Deca Frame 3 - Motor circuit breakers Magnetic, Thermal-magnetic (Product ref. GV3L, GV3P) Add-on blocks, accessories (for TeSys Deca Frame 3 circuit breakers)	5.5 to 45 kW		B6/25
TeSys Deca Frame 4 - Motor circuit breakers Magnetic, Thermal-magnetic (Product ref. GV4L, GV4LE, GV4P, GV4PE, GV4PEM, GV4PB) Add-on blocks, accessories (for TeSys Deca Frame 4 circuit breakers)	0.25 to 55 kW 1/2 to 60 HP	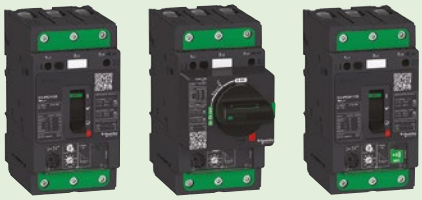	B6/31
TeSys Giga Frame 5, 6 - Motor circuit breakers Thermal-magnetic (Product ref. GV5P, GV6P) Add-on blocks, accessories (for TeSys Giga Frame 5, 6 circuit breakers)	55 to 250 kW		B6/49

PowerLogic™ Energy measurement solutions

PowerTag Energy sensors can be used with TeSys Deca, Giga motor circuit breakers			B6/58
PowerTag Energy Link Modbus TCP/IP concentrator for PowerTag Energy sensors			B6/62

TeSys Power - Modular circuit breakers for auxiliary circuits

Modular circuit breakers Thermal-magnetic (Product ref. GB)	0.5 to 20 A		B6/63

Technical Data for Designers B6/69

Circuit breakers for motor protection and control

Deca, Giga motor circuit breakers provide compact, reliable and efficient solutions for:
- isolation,
- protection against short circuits and overloads,
- On-Off manual control of motors from 0.06 to 250 kW.

They are conforming to, depending of the versions, IEC/EN 60947-1, IEC/EN 60947-2, IEC/EN 60947-4-1 and UL 60947-4-1, CSA 22.2 n° 60947-4-1.

Deca, Giga protection technologies

Deca, Giga circuit breakers are carried with 3 variants:
- Magnetic detection: product references GV2LE, GV2L, GV3L, GV4L, GV4LE for protection against short-circuit.
- Thermal-magnetic: product references GV2ME [(1)], GV2P, GV3P, GV4P, GV4PE, GV5, GV6 for protection against short-circuits, overload, phase loss and phase unbalance.
- Advanced: product references GV4PEM combines GV4P protections and motor jam, long start, ground-fault protections.

With a magnetic circuit breaker, a thermal relay is frequently associated in order to have a short circuit protection and an overload protection.

PB111879_21.eps
GV2LE

PB121672.eps
GV2P

PB121673.tif
GV2ME

TeSys Deca - Frame 2 circuit breakers: 45 mm width, for motors up to 15 kW

The most commonly used circuit breaker. with a choice of about 100 auxiliaries and accessories. TeSys Deca Frame 2 circuit breakers and TeSys K, Deca contactors can be easily assembled as a single block with one accessory.
The high Frame 2 electrical endurance (up to 100 000 operating cycles) makes it very suitable for direct manual motor control, especially ref. GV2ME [(1)] (thermal-magnetic c.b., Ith up to 32 A).

Enclosure mounting is well adapted to ref. GV2L and GV2P, with their possible extended rotary handle and visible trip indication.

PB121697.tif
GV3L

PB121680.tif
GV3P80

TeSys Deca - Frame 3 circuit breakers: 55 mm width, for motors up to 45 kW

High performance breakers, high breaking capacity (Ics 100 kA /400 V for ratings up to 32 A, 50 kA up to 80 A).
Wide choice of auxiliaries / accessories, possible extended rotary handle. Visible tri indication.
Patented Everlink connectors provide everlasting connection (no re-tightening required).

Direct monoblock starter assembly with TeSys Deca contactors. No accessory required.

PB114913.eps
GV4●E●●●

PB114814.eps
GV4●●●●

TeSys Deca - Frame 4 circuit breakers: 81 mm width, for motors up to 55 kW

State-of-the-art technology, TeSys Deca Frame 4 is compact and robust. Electronic core of ref. GV4P gives a great detection accuracy, with alarming and advanced protections for ref. GV4PEM, GV4PB.
Magnetic, electronic thermal-magnetic, or electronic thermal-magnetic with advanced protections versions.
Ratings up to 115 A with breaking capacity Ics of 25 kA/400 V (B series), 50 kA/400 V (N series) or 100 kA/400 V (S series).

PB120632.eps
GV5P150F

PB120633.eps
GV6P500F

TeSys Giga - Frame 5: 105 mm width, for motors up to 110 kW / Frame 6: 140 mm width, for motors up to 250 kW

TeSys Giga - Frame 5 and 6 with advanced thermal-magnetic trip unit provide more effective protection to high power motors in the most demanding appliances.
They provide protection to motors against overloads with selection of a trip class (5, 10 or 20), short-circuits, phase unbalance or phase loss.
Adjustable over-load and short circuit current settings provide flexibility.
Wide choice of auxiliaries/accessories are available for indication, control and operation.

*(1) Ref. **GV2ME●●AP** are specific **GV2ME** references for CEE zone.*

GV2L

GV2LE

GV2P

GV2ME

GV2RT

GV3L

GV3P

GV4L

GV4P

GV4PEM

GV5P150F

GV6P500F

TeSys Deca, Giga circuit breakers - Range overview

Molded case circuit breakers for motor protection and control

Product reference	Protection against: Short-circuits	Protection against: Overload	Protection against: Jam, ground-fault, long start... (Multifunction - see page B6/6)	Range (kW / 415 V AC)	Control	Terminals	Dimensions (W x H x D)
Deca - Frame 2							
GV2L	●			0.09 to 15	Rotary handle	Screw clamp	44.5 x 89 x 97 (with rotary handle)
GV2LE	●			0.06 to 15	Toggle	Screw clamp	44.5 x 89 x 78.5 (with toggle)
GV2P	●	●		0.06 to 15	Rotary handle	Screw clamp	44.5 x 89 x 97 (with rotary handle)
GV2ME (1)	●	●		0.06 to 15	Push button	Screw clamp, lug or spring	44.5 x 89 x 78.2 (with push button) (2)
GV2RT	●	●		0.09 to 11	Toggle	Screw clamp	44.5 x 89 x 78.5 (with toggle)
Deca - Frame 3							
GV3L	●			11 to 45	Rotary handle	Lug, EverLink (BTR screw)	55 x 132 x 136 (with rotary handle)
GV3P	●	●		5.5 to 45			
Deca - Frame 4							
GV4L	●			0.25 to 55 kW	Rotary handle	Lug, EverLink (BTR screw)	81 x 156 x 116 (with toggle) 81 X 156 x 165 (with rotary handle)
GV4LE	●				Toggle		
GV4P	●	●			Rotary handle		
GV4PE	●	●			Toggle		
GV4PEM	●	●	●		Toggle		
GV4PB	●	●	●	½ to 60 HP	Toggle		
Giga - Frame 5							
GV5P150●	●	●		55 to 110	Direct rotary handle	Lug, screw clamp	105 x 161 x 155 (3) (with direct rotary handle)
GV5P220●	●	●					
Giga - Frame 6							
GV6P320●	●	●		132 to 250	Direct rotary handle	Lug, screw clamp	140 x 255x 179 (3) (with direct rotary handle)
GV6P500●	●	●					

*(1) Ref. **GV2ME●●AP** are specific **GV2ME** references for CEE zone.*
*(2) 44.5 x 101 x 78.2 mm for **GV2ME●●3**.*
(3) Depth without keylock.

Life Is On Schneider Electric

Introduction

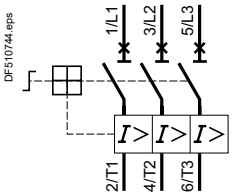

Thermal protection circuit breaker (with rotary control)

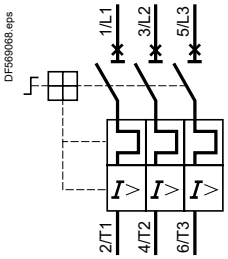

Thermal-magnetic protection circuit breaker (with rotary control)

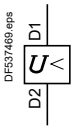

Voltage trip

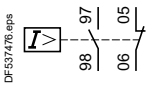

Fault signalling

Basic functions

Short circuit protection (magnetic / thermal-magnetic circuit breakers)
It provides a protection of the installation against short-circuit by an instantaneous trip of the circuit breaker. The tripping is obtained by means of a magnetic element incorporated in the motor circuit breaker or by an electronic detection (ref. GV4P, GV5 and GV6).
The magnetic tripping threshold is not adjustable, except on ref. GV4L, and is a fixed ratio of the maximum setting current In.

Overload protection (thermal-magnetic circuit breakers)
It provides a protection of the motor against overload. When current drawn by the motor is above its rated current, this continuous overcurrent lead to increase of motor internal temperature and reduce motor life time. Use of suitable protective device shall avoid this damage to the motor. This is obtained by means of a thermal element incorporated in the motor circuit breaker, or by sensors for electronic products (ref. GV4P, GV5 and GV6).
An automatic compensation for ambient temperature variations is also provided.
The rated operational current of the motor is displayed by turning a graduated knob.

Motor ON/OFF control
The circuit breaker provides a local manual control of the motor when used on its own (without contactor). The operation is possible by push buttons, toggle, or a single rotary handle.

Contacts position indication
Because they are suitable for isolation, the circuit breakers, in the open position, provide an adequate isolation distance and indicate the accurate position of the moving contacts by the position of the operators.

Additional functions

They are provided by additional modules.

Under voltage protection
Trips the circuit breaker in case of under voltage. The user is therefore protected against sudden starting of the machine when normal voltage is restored. Circuit breaker reset and/or start button “I” has to be pressed to restart the motor.

Remote off-power
Circuit breaker can be remotely tripped with the addition of a shunt trip.

Off-power locking
The operators on both open-mounted and enclosed motor circuit breakers can be locked in the off position “O” by up to 3 padlocks.

Motor circuit breakers versus fuse protection ?

Circuit breakers are a common solution for Powering motor against short circuits and overloads.
As a comparison, a fuse based solution can only provide a partial protection depending on the choice of the fuse type and rating. The thermal-magnetic circuit breaker is adjustable and can be fine-tuned to the practical motor load.
The fuse based solution offers a very fast protection.

Advanced protections embedded on Deca - Frame 4 ref. GV4PEM, GV4PB (multifunction)

In addition to basic protections, ref. GV4PEM, GV4PB embed protections against:
- Long start (high inertia, resistive torque machines)
- Jam (overtorque, machine failure)
- Ground-fault (reduced isolation)
- Unbalanced (phase currents are not equal)
- Phase loss (1 or 2 phases missing).

Fully configurable-advanced protections:
- wireless with 'EcoStruxure Power Device App' application for Android smartphone through NFC (near field communication).

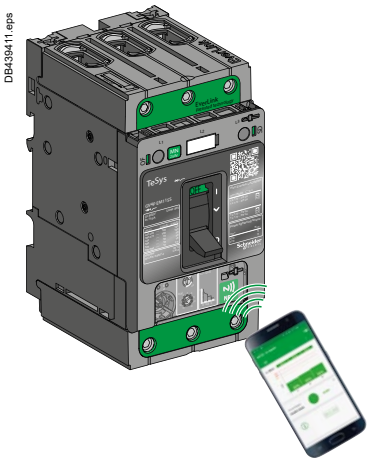

- with EcoStruxure Power Commission software on a computer connected to the test socket through a configuration and maintenance module.

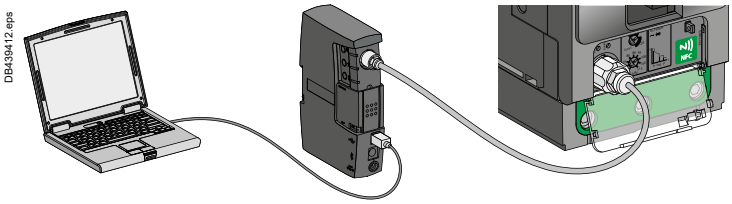

Remote indications:
Ref. GV4PEM, GV4PB circuit breaker may be equipped with an SDx alarming / fault differentiation module to prevent to trip or to identify the type of fault after a trip (see page B6/44).

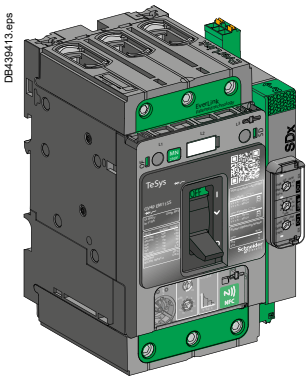

EverLink technology for Frame 3 and 4

Frame 3 and 4 features a cable connection method with patented creep-compensating technology built directly into the terminal — EverLink:
- With EverLink connectors, save space and time during panel assembly.
- Bare cable connections are as safe as compression lug ones.

PB121680.tif

PB114914_24.eps

DF526139.eps

EverLink terminals, with BTR screws

No overheating connections - EverLink creep-compensated terminals for Frame 3, 4

The EverLink patented technology for terminals dramatically reduces the risk of loose bare cables due to copper creeping. Vibration withstand is improved and periodic re-tightening is no longer needed.

EverLink® Long lasting connection quality

The clamp connectors which don't need re-tightening.

Creeping phenomena

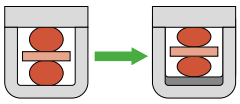

Copper conductors are subject to creep with the time, reducing the contact pressure in conventional clamps

During the tightening a force is applied on the conductors and on a spring.

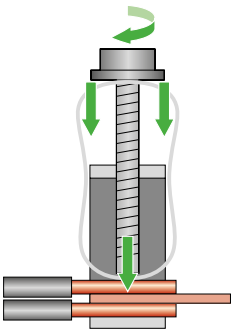

Maintaining of cables assured by pressure of spring and crimping of conductor on the contact plate.

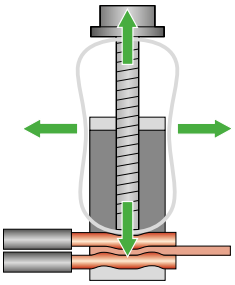

The spring compensates for cable conductor creep. Tightening force is assured.

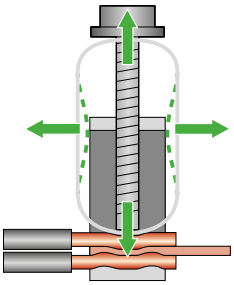

Auxiliary functions provided by add-on blocks

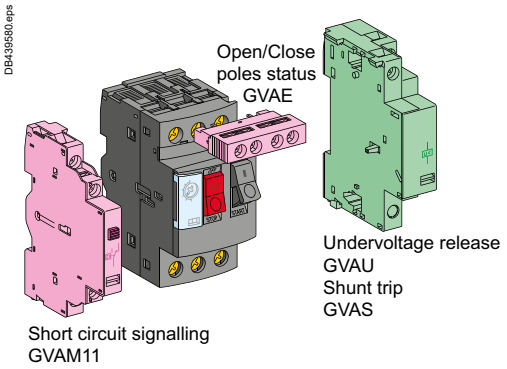

TeSys Deca - Frame 2

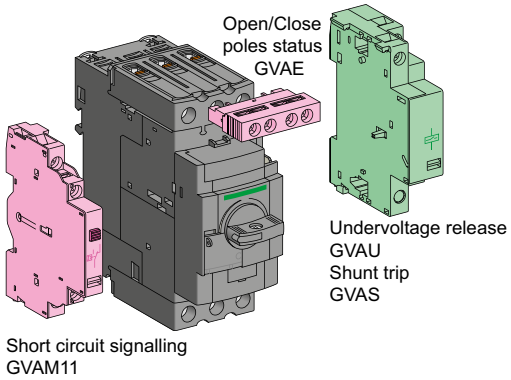

TeSys Deca - Frame 3

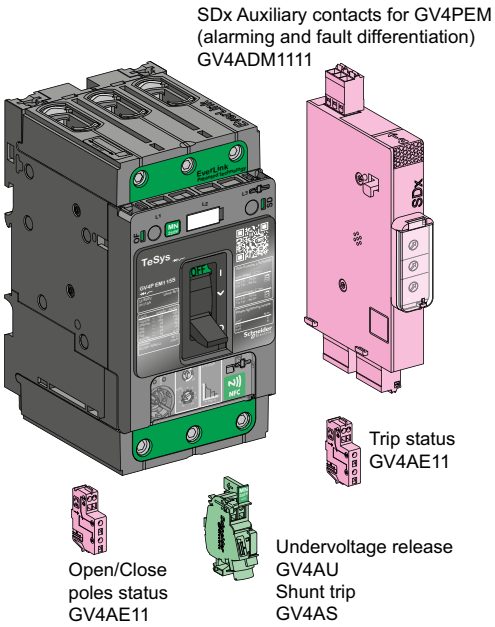

TeSys Deca - Frame 4

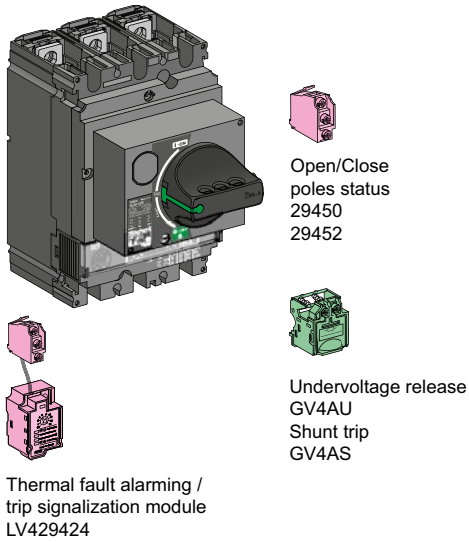

TeSys Giga - Frame 5, 6

Auxiliary contacts add-on blocks
For control, alarms, automatic actions:
- **Instantaneous** indication of the position of the circuit breaker contacts
- **Trip indication**,
- **Alarming.**

Trip units
For remote tripping of circuit breaker:
- **Shunt trip / MX**, trips the circuit breaker when powered
- **Undervoltage release / MN**, trips the circuit breaker when voltage is loss.

Compact power circuits wiring with TeSys Deca circuit breakers (Frame 2) and Deca contactors [1]

Busbars and combination blocks
Power busbars and combinations blocks provide a compact solution for assembling a group of motor starters.
They save wiring time and provide a clear finish aspect.
These solutions are available for Deca - Frame 2 circuit breakers + Deca contactors.

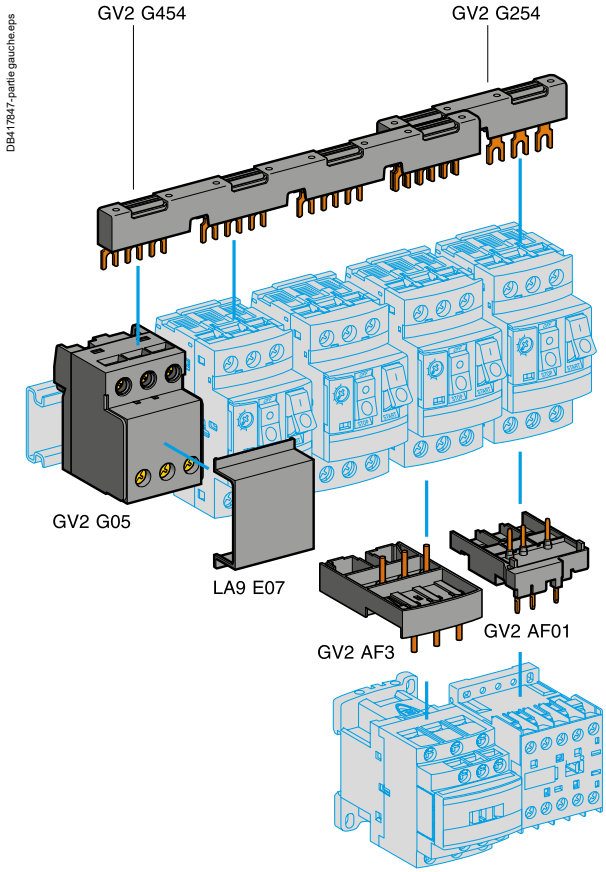

(1) Details on this solution in chapter B2 of this catalog.

TeSys Deca - Frame 2

0.06 to 15 kW

Product references

PB121671.tif

GV2L16

Motor circuit breakers from 0.09 to 15 kW / 400 V

Deca - Frame 2 (ref. GV2L): Control by rotary knob, connection by screw clamp terminals

Standard power ratings of 3-phase motors 50/60 Hz in category AC-3/AC-3e									Magnetic protection rating	Tripping current Id ± 20 %	Use in association with thermal overload relay (class 10 A)	Reference
400/415 V			500 V			690 V						
P	Icu	Ics (1)	P	Icu	Ics (1)	P	Icu	Ics (1)				
kW	kA		kW	kA		kW	kA		A	A		
0.09	★	★	**–**	–	–	**–**	–	–	0.4	5.8	LRD03	**GV2L03**
0.12	★	★	**–**	–	–	**0.37**	★	★	0.63	9.3	LRD04	**GV2L04**
0.18	★	★	**–**	–	–	**–**	–	–	0.63	9.3	LRD04	**GV2L04**
–	–	–	**–**	–	–	**0.55**	★	★	1	15.1	LRD05	**GV2L05**
0.25	★	★	**–**	–	–	**–**	–	–	1	15.1	LRD05	**GV2L05**
–	–	–	**–**	–	–	**0.75**	★	★	1	15.1	LRD06	**GV2L05**
0.37	★	★	**0.37**	★	★	**–**	–	–	1	15.1	LRD05	**GV2L05**
0.55	★	★	**0.55**	★	★	**1.1**	★	★	1.6	26.2	LRD06	**GV2L06**
–	–	–	**0.75**	★	★	**–**	–	–	1.6	26.2	LRD06	**GV2L06**
0.75	★	★	**1.1**	★	★	**1.5**	4	100	2.5	39	LRD07	**GV2L07**
1.1	–	–	**–**	–	–	**–**	–	–			LRD08	**GV2L08**
1.5	★	★	**1.5**	★	★	**3**	4	100	4	74	LRD08	**GV2L08**
–	–	–	**–**	–	–	**–**	–	–			LRD08	**GV2L08**
2.2	★	★	**3**	★	★	**4**	4	100	6.3	91	LRD10	**GV2L10**
3	★	★	**4**	10	100	**5.5**	4	100	10	149	LRD12	**GV2L14**
4	–	–	**–**	–	–	**–**	–	–			LRD14	**GV2L14**
–	–	–	**–**	–	–	**7.5**	4	100	10	149	LRD14	**GV2L14**
–	–	–	**–**	–	–	**9**	4	100	14	253.4	LRD16	**GV2L16**
5.5	50	50	**7.5**	10	75	**11**	4	100	14	253.4	LRD16	**GV2L16**
7.5	50	50	**9**	10	75	**15**	4	100	18	341	LRD21	**GV2L20**
9	50	50	**11**	10	75	**18.5**	4	100	25	388.3	LRD22	**GV2L22**
11	50	50	**15**	10	75	**–**	–	–	25	388.3	LRD22	**GV2L22**
15	50	50	**18.5**	10	75	**22**	4	100	32	537.6	LRD32	**GV2L32**

(1) As % of Icu. Associated current limiter or fuses, where required.
★ > 100 kA.

Characteristics:
pages B6/72 to B6/74

Curves:
pages B6/77 to B6/82

Dimensions, schemes:
pages B6/90 to B6/92, B6/99

Life Is On Schneider Electric

Product references

PB111879.eps

GV2LE

Magnetic motor circuit breakers from 0.06 to 15 kW / 400 V

Deca - Frame 2 (ref. GV2LE): control by rocker lever, connection by screw clamp terminals

Standard power ratings of 3-phase motors 50/60 Hz in category AC-3/AC-3e									Magnetic protection rating	Tripping current Id ± 20 %	Use in association with thermal overload relay	Reference
400/415 V			500 V			690 V						
P	Icu	Ics (1)	P	Icu	Ics (1)	P	Icu	Ics (1)				
kW	kA		kW	kA		kW	kA		A	A		
0.06	★	★	**–**	–	–	**–**	–	–	0.4	5.8	LR2K0302	**GV2LE03**
0.09	★	★	**–**	–	–	**–**	–	–	0.4	5.8	LR2K0304	**GV2LE03**
0.12	★	★	**–**	–	–	**0.37**	★	★	0.63	9.3	LR2K0304	**GV2LE04**
0.18	★	★	**–**	–	–	**–**	–	–	0.63	9.3	LR2K0305	**GV2LE04**
–	–	–	**–**	–	–	**0.55**	★	★	1	15.1	LR2K0305	**GV2LE05**
0.25	★	★	**–**	–	–	**–**	–	–	1	15.1	LR2K0306	**GV2LE05**
–	–	–	**–**	–	–	**0.75**	★	★	1	15.1	LR2K0306	**GV2LE05**
0.37	★	★	**0.37**	★	★	**–**	–	–	1	15.1	LR2K0306	**GV2LE05**
0.55	★	★	**0.55**	★	★	**1.1**	★	★	1.6	26.2	LR2K0307	**GV2LE06**
–	–	–	**0.75**	★	★	**–**	–	–	1.6	26.2	LR2K0307	**GV2LE06**
0.75	★	★	**1.1**	★	★	**1.5**	3	75	2.5	39	LR2K0308	**GV2LE07**
1.1	★	★	**–**	–	–	**–**	–	–	2.5	39	LR2K0308	**GV2LE07**
1.5	★	★	**1.5**	★	★	**3**	3	75	4	74	LR2K0310	**GV2LE08**
–	–	–	**2.2**	★	★	**–**	–	–	4	74	LR2K0312	**GV2LE08**
2.2	★	★	**3**	50	100	**4**	3	75	6.3	91	LR2K0312	**GV2LE10**
3	★	★	**4**	10	100	**5.5**	3	75	10	149	LR2K0314	**GV2LE14**
4	★	★	**5.5**	10	100	**–**	–	–	10	149	LR2K0316	**GV2LE14**
–	–	–	**–**	–	–	**7.5**	3	75	10	149	LRD14	**GV2LE14**
–	–	–	**–**	–	–	**9**	3	75	14	253.4	LRD16	**GV2LE16**
5.5	15	50	**7.5**	6	75	**11**	3	75	14	253.4	LR2K0321	**GV2LE16**
7.5	15	50	**9**	6	75	**15**	3	75	18	341	LRD21	**GV2LE20**
9	15	40	**11**	4	75	**18.5**	3	75	25	388.3	LRD22	**GV2LE22**
11	15	40	**15**	4	75	**–**	–	–	25	388.3	LRD22	**GV2LE22**
15	10	50	**18.5**	4	75	**22**	3	75	32	537.6	LRD32	**GV2LE32**

(1) As % of Icu.
★ > 100 kA.

Characteristics:
pages B6/72 to B6/74

Curves:
pages B6/77 to B6/82

Dimensions, schemes:
pages B6/90 to B6/92, B6/99

PB121673.tif

GV2ME

Motor circuit breakers from 0.06 to 15 kW / 400 V

Deca - Frame 2 (ref. GV2ME): control by push button, connection by screw clamp terminals

Standard power ratings of 3-phase motors 50/60 Hz in category AC-3/AC-3e									Setting range of thermal trips (2)	Magnetic tripping current Id ± 20 %	Reference
400/415 V			500 V			690 V					
P	Icu	Ics (1)	P	Icu	Ics (1)	P	Icu	Ics (1)			
kW	kA	%	kW	kA	%	kW	kA	%	A	A	
–	–	–	–	–	–	–	–	–	0.1…0.16	1.93	**GV2ME01**
0.06	★	★	–	–	–	–	–	–	0.16…0.25	3.08	**GV2ME02**
0.09	★	★	–	–	–	–	–	–	0.25…0.40	5.8	**GV2ME03**
0.12	★	★	–	–	–	**0.37**	★	★	0.40…0.63	9.3	**GV2ME04**
0.18	★	★	–	–	–	**–**	–	–			
0.25	★	★	–	–	–	**0.55**	★	★	0.63…1	15.1	**GV2ME05**
0.37	★	★	**0.37**	★	★	**–**	–	–	1…1.6	26.2	**GV2ME06**
0.55	★	★	**0.55**	★	★	**0.75**	★	★			
–	–	–	**0.75**	★	★	**1.1**	★	★			
0.75	★	★	**1.1**	★	★	**1.5**	3	75	1.6…2.5	39	**GV2ME07**
1.1	★	★	**1.5**	★	★	**2.2**	3	75	2.5…4	74	**GV2ME08**
1.5	★	★	**2.2**	★	★	**3**	3	75			
2.2	★	★	**3**	50	100	**4**	3	75	4…6.3	91	**GV2ME10**
3	★	★	**4**	10	100	**5.5**	3	75	6…10	149	**GV2ME14**
4	★	★	**5.5**	10	100	**7.5**	3	75			
5.5	15	50	**7.5**	6	75	**9**	3	75	9…14	253.4	**GV2ME16**
–	–	–	**–**	–	–	**11**	3	75			
7.5	15	50	**9**	6	75	**15**	3	75	13…18	341	**GV2ME20**
9	15	40	**11**	4	75	**18.5**	3	75	17…23	341	**GV2ME21**
11	15	40	**15**	4	75	**–**	–	–	20…25	388.3	**GV2ME22** (3)
15	10	50	**18.5**	4	75	**22**	3	75	24…32	537.6	**GV2ME32**

Connection by lugs

To order thermal-magnetic circuit breakers with connection by lugs, add the digit **6** to the end of reference selected above.
Example: ref. **GV2ME08** becomes **GV2ME086**.

Thermal-magnetic circuit breakers GV2ME with built-in auxiliary contact block

With instantaneous auxiliary contact block (composition, see page B6/21):

■ GVAE1, add suffix **AE1TQ** to the motor circuit breaker reference selected above.
Example: **GV2ME01AE1TQ**.
■ GVAE11, add suffix **AE11TQ** to the motor circuit breaker reference selected above.
Example: **GV2ME01AE11TQ**.
■ GVAN11, add suffix **AN11TQ** to the motor circuit breaker reference selected above.
Example: **GV2ME01AN11TQ**.

These circuit breakers with built-in contact block are sold in lots of 20 units in a single pack.

(1) As % of Icu.
(2) The thermal trip setting must be within the range marked on the graduated knob.
*(3) Maximum rating which can be mounted in enclosures **GV2MC** or **MP**, please consult your Regional Sales Office.*
★ > 100 kA.

Characteristics: pages B6/72 to B6/76
Curves: pages B6/83 to B6/85
Dimensions, schemes: pages B6/93 to B6/97, B6/99

Product references - UL applications

PB121673.tif

GV2ME

Motor circuit breakers from 3/4 to 20 HP / 460 V

Deca - Frame 2 (ref. GV2ME): control by push button, connection by screw clamp terminals

Thermal setting (A)	Maximum Horsepower ratings								Group Motor applications	Reference
	Single-Phase			Three-Phase						
	115 V	200 V	230 V	115 V	200 V	230 V	460 V	575 V	Max. Fuse or Circuit breaker (A)	
0.1…0.16	–	–	–	–	–	–	–	–	450	**GV2ME01**
0.16…0.25	–	–	–	–	–	–	–	–	450	**GV2ME02**
0.25…0.40	–	–	–	–	–	–	–	–	450	**GV2ME03**
0.40…0.63	–	–	–	–	–	–	–	–	450	**GV2ME04**
0.63…1	–	–	–	–	–	–	–	1/2	450	**GV2ME05**
1…1.6	–	–	1/10	–	–	–	3/4	3/4	450	**GV2ME06**
1.6…2.5	–	1/6	1/6	–	1/2	1/2	1	1.5	450	**GV2ME07**
2.5…4	1/8	1/4	1/3	–	3/4	3/4	2	3	450	**GV2ME08**
4…6.3	1/4	1/2	1/2	3/4	1	1.5	3	5	450	**GV2ME10**
6…10	1/2	1	1.5	1	2	3	5	7.5	450	**GV2ME14**
9…14	3/4	2	2	2	3	3	10	10	450	**GV2ME16**
13…18	1	2	3	2	5	5	10	15	450	**GV2ME20**
17…23	1.5	3	3	3	5	7.5	15	20	450	**GV2ME21**
20…25	2	–	–	–	7.5	7.5	15	20	450	**GV2ME22**
24…32	2	5	5	5	7.5	10	20	25	450	**GV2ME32**

Characteristics:
pages B6/72 to B6/76

Curves:
pages B6/83 to B6/85

Dimensions, schemes:
pages B6/93 to B6/97, B6/99

GV2ME●●3

Motor circuit breakers from 0.06 to 11 kW / 400 V

Deca - Frame 2 (ref. GV2ME) (1): control by push button, connection by spring terminals

Standard power ratings of 3-phase motors 50/60 Hz in category AC-3/AC-3e						Setting range of thermal trips (3)	Magnetic tripping current Id ± 20 %	Reference
400/415 V			500 V					
P	Icu	Ics (2)	P	Icu	Ics (2)			
kW	kA	%	kW	kA	%	A	A	
–	–	–	–	–	–	0.1…0.16	1.93	**GV2ME013**
0.06	★	★	–	–	–	0.16…0.25	3.08	**GV2ME023**
0.09	★	★	–	–	–	0.25…0.40	5.8	**GV2ME033**
0.12 **0.18**	★ ★	★ ★	–	–	–	0.40…0.63	9.3	**GV2ME043**
0.25 **0.37**	★ ★	★ ★	**0.37**	★	★	0.63…1	15.1	**GV2ME053**
0.37 **0.55**	★ ★	★ ★	**0.37** **0.55** **0.75**	★ ★ ★	★ ★ ★	1…1.6	26.2	**GV2ME063**
0.75	★	★	**1.1**	★	★	1.6…2.5	39	**GV2ME073**
1.1 **1.5**	★ ★	★ ★	**1.5** **2.2**	★ ★	★ ★	2.5…4	74	**GV2ME083**
2.2	★	★	**3**	50	100	4…6.3	91	**GV2ME103**
3 **4**	★ ★	★ ★	**4** **5.5**	10 10	100 100	6…10	149	**GV2ME143**
5.5	15	50	**7.5**	6	75	9…14	253.4	**GV2ME163**
7.5	15	50	**9**	6	75	13…18	341	**GV2ME203**
9 **11**	15 15	40 40	**11**	4	75	17…23	341	**GV2ME213**
11	15	40	**15**	4	75	20…25	388.3	**GV2ME223**

Contact blocks

Description	Mounting	Maximum number	Type of contacts	Sold in lots of	Unit reference
Instantaneous auxiliary contacts	Front	1	N/O + N/C	10	**GVAE113**
			N/O + N/O	10	**GVAE203**
	LH side	2	N/O + N/C	1	**GVAN113**
			N/O + N/O	1	**GVAN203**

Accessory

Description	Application	Sold in lots of	Unit reference
Cable end reducer	For connection of conductors from 1 to 1.5 mm²	20	**LA9D99**

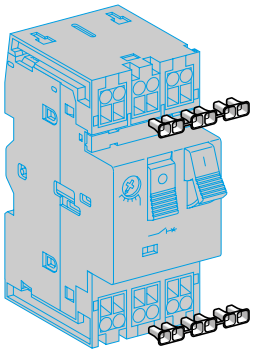

LA9D99

*(1) For connection of conductors from 1 to 1.5 mm², the use of an **LA9D99** cable end reducer is recommended.*
*(2) Maximum rating which can be mounted in enclosures **GV2MC** or **MP**, please consult your Regional Sales Office*
(3) The thermal trip setting must be within the range marked on the graduated knob.
★ > 100 kA.

Characteristics:
pages B6/72 to B6/76

Curves:
pages B6/83 to B6/85

Dimensions, schemes:
pages B6/93 to B6/97, B6/99

Life Is On Schneider Electric

Product references

GV2P08

Motor circuit breakers from 0.06 to 15 kW / 400 V

Deca - Frame 2 (ref. GV2P): control by rotary knob, connection by screw clamp terminals

Standard power ratings of 3-phase motors 50/60 Hz in category AC-3/AC-3e									Setting range of thermal trips (2)	Magnetic tripping current Id ± 20 %	Reference
400/415 V			500 V			690 V					
P	Icu	Ics (1)	P	Icu	Ics (1)	P	Icu	Ics (1)			
kW	kA	%	kW	kA	%	kW	kA	%	A	A	
–	–	–	–	–	–	–	–	–	0.1…0.16	1.93	**GV2P01**
0.06	★	★	–	–	–	–	–	–	0.16…0.25	3.08	**GV2P02**
0.09	★	★	–	–	–	–	–	–	0.25…0.40	5.8	**GV2P03**
0.12	★	★	–	–	–	**0.37**	★	★	0.40…0.63	9.3	**GV2P04**
0.18	★	★	–	–	–	**–**	–	–			
0.25	★	★	–	–	–	**0.55**	★	★	0.63…1	15.1	**GV2P05**
0.37	★	★	**0.37**	★	★	**–**	–	–	1…1.6	26.2	**GV2P06**
0.55	★	★	**0.55**	★	★	**0.75**	★	★			
0.75	★	★	**1.1**	★	★	**1.5**	8	100	1.6…2.5	39	**GV2P07**
1.1	★	★	**1.5**	★	★	**2.2**	8	100	2.5…4	74	**GV2P08**
2.2	★	★	**3**	★	★	**4**	6	100	4…6.3	91	**GV2P10**
3	★	★	**5**	50	100	**5.5**	6	100	6…10	149	**GV2P14**
5.5	★	★	**7.5**	42	75	**9**	6	100	9…14	253.4	**GV2P16**
–	–	–	**–**	–	–	**11**	6	100			
7.5	50	50	**9**	10	75	**15**	4	100	13…18	341	**GV2P20**
9	50	50	**11**	10	75	**18.5**	4	100	17…23	341	**GV2P21**
11	50	50	**15**	10	75	**–**	–	–	20…25	388.3	**GV2P22**
15	50	50	**18.5**	10	75	**22**	4	100	24…32	537.6	**GV2P32**

How to use the table : select your load operating voltage, then select its standard power value (below, in the same column). The appropriate circuit breaker is in the extreme right column, in the corresponding row.
Example: GV2P04 can protect 0.12 and 0.18 kW under 400/415 V, and 0.18 kW under 440 V, and 0.37 kW under 690 V. No 500 V standard power value can fit GV2P04.

Motor circuit breakers up to 50 HP / 600 V, UL 60947-4-1 type E

Deca - Frame 2 (ref. GV2P): control by rotary knob, connection by screw clamp terminals

To obtain a GV2P motor circuit breaker, UL 60947-4-1 type E, use the following with the circuit breaker:
■ a “Large Spacing” adapter **GV2GH7.**

Motor circuit breakers from 3/4 to 20 HP / 460 V

Deca - Frame 2 (ref. GV2P): control by rotary handle, connection by screw clamp terminals

Thermal setting (A)	Maximum Horsepower ratings (3)								Group Motor applications	Reference
	Single-Phase			Three-Phase						
	115 V	200 V	230 V	115 V	200 V	230 V	460 V	575 V	Max. Fuse or Circuit breaker (A)	
0.1…0.16	–	–	–	–	–	–	–	–	450	**GV2P01**
0.16…0.25	–	–	–	–	–	–	–	–	450	**GV2P02**
0.25…0.40	–	–	–	–	–	–	–	–	450	**GV2P03**
0.40…0.63	–	–	–	–	–	–	–	–	450	**GV2P04**
0.63…1	–	–	–	–	–	–	–	1/2	450	**GV2P05**
1…1.6	–	–	1/10	–	–	–	3/4	3/4	450	**GV2P06**
1.6…2.5	–	1/6	1/6	–	1/2	1/2	1	1.5	450	**GV2P07**
2.5…4	1/8	1/4	1/3	–	3/4	3/4	2	3	450	**GV2P08**
4…6.3	1/4	1/2	1/2	3/4	1	1.5	3	5	450	**GV2P10**
6…10	1/2	1	1.5	1	2	3	5	7.5	450	**GV2P14**
9…14	3/4	2	2	2	3	3	10	10	450	**GV2P16**
13…18	1	2	3	2	5	5	10	15	450	**GV2P20**
17…23	1.5	3	3	3	5	7.5	15	20	450	**GV2P21**
20…25	2	–	–	–	7.5	7.5	15	20	450	**GV2P22**
24…32	2	5	5	5	7.5	10	20	25	450	**GV2P32**

(1) As % of Icu.
(2) The thermal trip setting must be within the range marked on the graduated knob.
(3) 3P FLA corresponding values: see page A5/130.
★ > 100 kA.

Characteristics:
pages B6/72 to B6/76
Curves:
pages B6/83 to B6/86
Dimensions, schemes:
pages B6/93 to B6/97, B6/99

PB121514.eps

GV2RT

For motors with high current peak on starting

Deca - Frame 2 (ref. GV2RT): control by toggle, connection by screw clamp terminals

Standard power ratings of 3-phase motors 50/60 Hz in category AC-3/AC-3e					Setting range of thermal trips (1)	Magnetic tripping current Id ± 20 %	Reference
220/ 230 V	400/ 415 V	440 V	500 V	690 V			
kW	kW	kW	kW	kW	A	A	
0.06	0.09	0.09 0.12	–	–	0.25…0.40	8	**GV2RT03**
–	0.12 0.18	0.18	–	0.37	0.40…0.63	13	**GV2RT04**
0.09 0.12	0.25 0.37	0.25 0.37	0.37	0.55	0.63…1	22	**GV2RT05**
0.18 0.25	0.37 0.55	0.37 0.55	0.37 0.55 0.75	0.75 1.1	1…1.6	33	**GV2RT06**
0.37	0.75	0.75 1.1	1.1	1.5	1.6…2.5	51	**GV2RT07**
0.55 0.75	1.1 1.5	1.5	1.5 2.2	2.2 3	2.5…4	78	**GV2RT08**
1.1	2.2	2.2 3	3	4	4…6.3	138	**GV2RT10**
1.5 2.2	3 4	4	4 5.5	5.5 7.5	6…10	200	**GV2RT14**
2.2 3	5.5	5.5 7.5	7.5	9 11	9…14	280	**GV2RT16**
4	7.5	7.5 9	9	15	13…18	400	**GV2RT20**
5.5	9 11	11	11	18.5	17…23	400	**GV2RT21**

For primaries of 3-phase transformers

Deca - Frame 2 (ref. GV2RT): control by toggle, connection by screw clamp terminals

Standard power ratings					Setting range of thermal trips (1)	Magnetic tripping current Id ± 20 %	Reference
230/240 V	400/415 V	440 V	500 V	690 V			
kVA	kVA	kVA	kVA	kVA	A	A	
–	–	–	–	–	0.25…0.40	8	**GV2RT03**
–	–	–	–	–	0.40…0.63	13	**GV2RT04**
–	–	0.63	0.63	1	0.63…1	22	**GV2RT05**
0.4	0.63	1	1	–	1…1.6	33	**GV2RT06**
0.63	1	–	1.6	1.6 2	1.6…2.5	51	**GV2RT07**
1	1.6 2	1.6 2	2 2.5	2.5	2.5…4	78	**GV2RT08**
1.6 2	2.5	2.5 4	4	4 5 6.3	4…6.3	138	**GV2RT10**
2.5	4 5	5	5 6.3	–	6…10	200	**GV2RT14**
4	6.3	6.3	–	10 12.5	9…14	280	**GV2RT16**
5 6.3	10	10	10 12.5	10	13…18	400	**GV2RT20**

Accessory (2)

Description	Reference
Padlockable external operator (IP 54) black handle, blue legend plate	**GV2AP03**

(1) The thermal trip setting must be within the range marked on the graduated knob.
*(2) Other accessories such as mounting, cabling and marking accessories are identical to those used for **GV2ME** motor circuit breakers, see page B6/23.*

Motor circuit breakers

Characteristics:
pages B6/72 to B6/76

Curves:
pages B6/83 to B6/85

Dimensions, schemes:
pages B6/98 to B6/99

Life Is On Schneider Electric

DB439407.eps

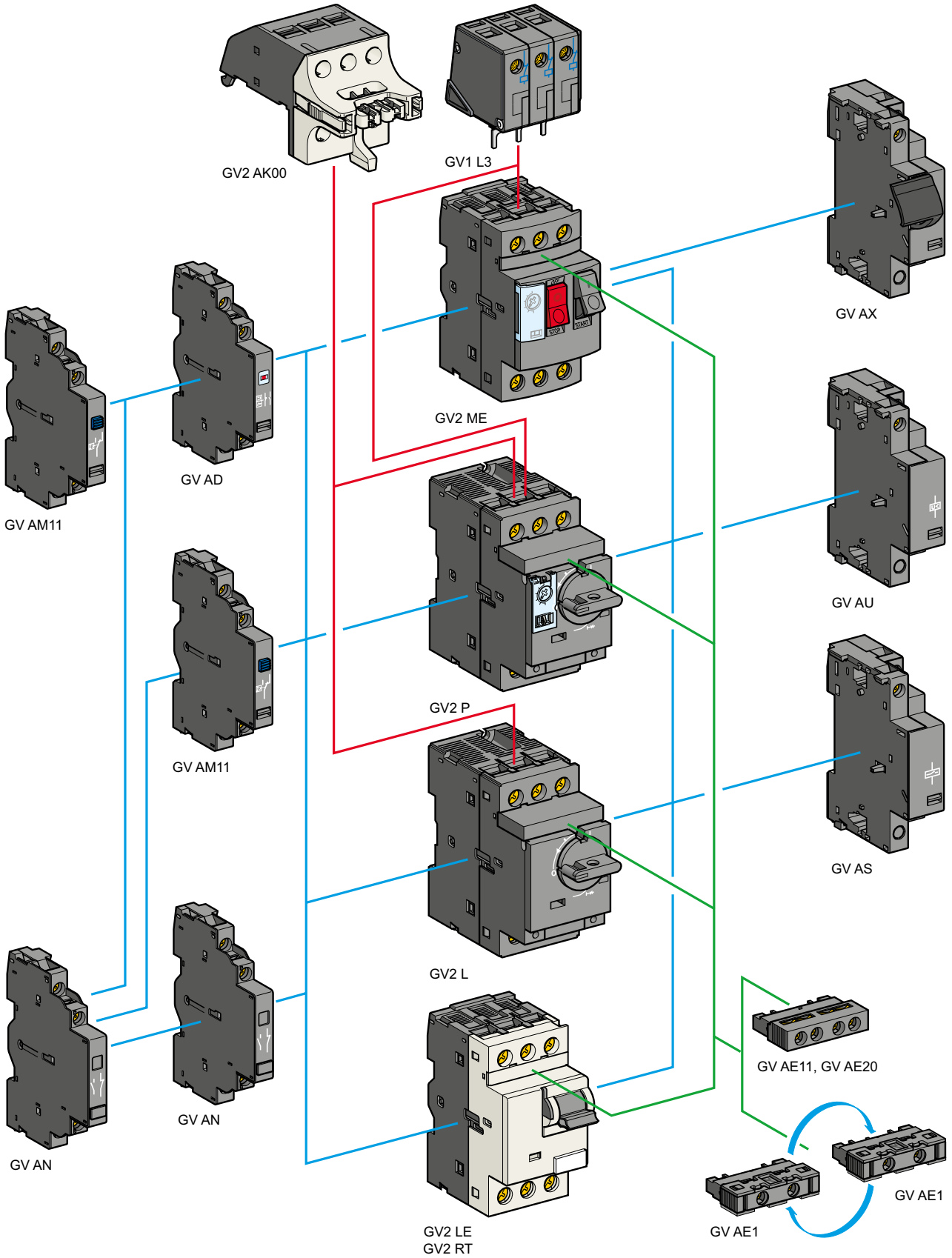

Life Is On Schneider Electric

Product references

Contact blocks

Description	Mounting	Maximum number	Type of contacts		Sold in lots of	Unit reference
Instantaneous auxiliary contacts	Front [1]	1	N/O or N/C [2]		10	**GVAE1**
			N/O + N/C		10	**GVAE11**
			N/O + N/O		10	**GVAE20**
	Side (LH)	2	N/O + N/C		1	**GVAN11**
			N/O + N/O		1	**GVAN20**
Fault signalling contact + instantaneous auxiliary contact	Side [3] (LH)	1	N/O (fault)	+ N/O	1	**GVAD1010**
				+ N/C	1	**GVAD1001**
			N/C (fault)	+ N/O	1	**GVAD0110**
				+ N/C	1	**GVAD0101**
Short-circuit signalling contact	Side (LH)	1	C/O common point		1	**GVAM11**

Electric trips

Mounting	Voltage		Reference
Undervoltage or shunt trips [4]			
Side (1 block on RH side of circuit breaker)	24 V	50 Hz	**GVA●025**
		60 Hz	**GVA●026**
	48 V	50 Hz	**GVA●055**
		60 Hz	**GVA●056**
	100 V	50 Hz	**GVA●107**
	100…110 V	60 Hz	**GVA●107**
	110…115 V	50 Hz	**GVA●115**
		60 Hz	**GVA●116**
	120…127 V	50 Hz	**GVA●125**
	127 V	60 Hz	**GVA●115**
	200 V	50 Hz	**GVA●207**
	200…220 V	60 Hz	**GVA●207**
	220…240 V	50 Hz	**GVA●225**
		60 Hz	**GVA●226**
	380…400 V	50 Hz	**GVA●385**
		60 Hz	**GVA●386**
	415…440 V	50 Hz	**GVA●415**
	415 V	60 Hz	**GVA●416**
	440 V	60 Hz	**GVA●385**
	480 V	60 Hz	**GVA●415**
	500 V	50 Hz	**GVA●505**
	600 V	60 Hz	**GVA●505**
Undervoltage trip, INRS (can only be mounted on GV2ME) Safety device for dangerous machines conforming to INRS and VDE 0113			
Side (1 block on RH side of circuit breaker GV2ME)	110…115 V	50 Hz	**GVAX115**
		60 Hz	**GVAX116**
	127 V	60 Hz	**GVAX115**
	220…240 V	50 Hz	**GVAX225**
		60 Hz	**GVAX226**
	380…400 V	50 Hz	**GVAX385**
		60 Hz	**GVAX386**
	415…440 V	50 Hz	**GVAX415**
	440 V	60 Hz	**GVAX385**

PB111870.eps

GV1L3

PB138227.eps

LA9LB920

Limiter blocks

Description	Mounting	Maximum number	Reference
Visible isolation block [5]	Front [1]	1	**GV2AK00 [6]**
Limiters	At top (GV2ME and GV2P) for circuit breakers with screw clamp connections	1	**GV1L3**
	Independent [7]	1	**LA9LB920**

*(1) Mounting of a **GVAE** contact block or a **GV2AK00** visible isolation block on **GV2P** and **GV2L**.*
(2) Choice of N/C or N/O contact operation, depending on which way round the reversible block is mounted.
*(3) The **GVAD** is always mounted next to the circuit breaker.*
*(4) To order an undervoltage trip: replace the dot (●) in the reference with a **U**, example: **GVAU025**.*
*To order a shunt trip: replace the dot (●) in the reference with an **S**, example: **GVAS025**.*
*(5) Visible isolation of the 3 poles upstream of circuit breaker **GV2P** and **GV2L**.*
(6) Ie Max = 32 A.
*(7) For more information about the current limiter **LA9LB920,** see pages A4/32 and A4/61.*

Characteristics: pages B6/87 to B6/89
Dimensions, schemes: pages B6/90 to B6/99

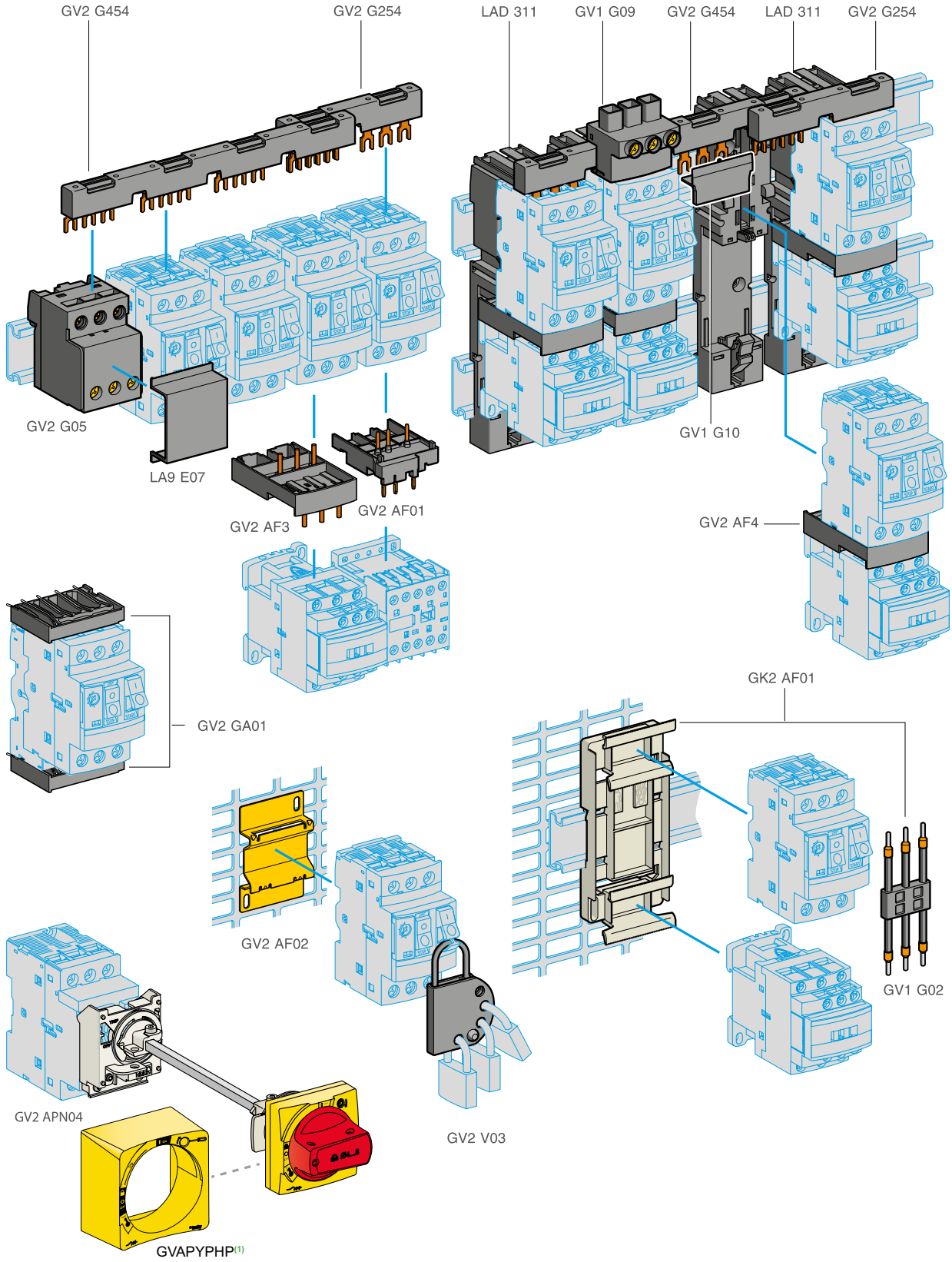

(1) Standard front plate must be removed from the assembly and replaced by Protective front plate (GVAPYPHP).

Life Is On Schneider Electric

Product references

Accessories for circuit breakers with screw clamp connections

Description	Application	Sold in lots of	Unit reference
Adapter plates	For mounting a GV2 by screw fixing	10	**GV2AF02**
	For mounting a GV2ME and contactor LC1D09…D38 with front faces aligned	1	**LAD311**
Height compensation plate	7.5 mm to align GV2ME-GV2LE and GV2P-GV2L and allow the use of a common GV2G●●● busbar	10	**GV1F03**
Combination blocks	Between GV2 and contactor LC1K or LP1K	10	**GV2AF01**
	Between GV2 and contactor LC1D09…D38	10	**GV2AF3**
	Between GV2 mounted on LAD311 and contactor LC1D09…D38	10	**GV2AF4**
Motor starter adapter plate	With 3-pole connection for mounting a GV2 and a contactor LC1D09…D25	1	**GK2AF01**

Description	Application	Pitch	Reference
		mm	
Sets of 3-pole Ie = 63 A busbars	2 tap-offs	45	**GV2G245**
		54	**GV2G254**
		72	**GV2G272**
	3 tap-offs	45	**GV2G345**
		54	**GV2G354**
	4 tap-offs	45	**GV2G445**
		54	**GV2G454**
		72	**GV2G472**
	5 tap-offs	54	**GV2G554**

GV1G09

Description	Ie	Application	Sold in lots of	Unit reference
	A			
Protective end cover	-	For unused busbar outlets	5	**GV1G10**
Terminal block for supply to one or more GV2G busbar sets	63	Connection from the top	1	**GV1G09**
	63	Can be fitted with current limiter GV1L3 (GV2ME and GV2P)	1	**GV2G05**
Cover for terminal block	-	For mounting in modular panels	10	**LA9E07**
Flexible 3-pole connection for connecting a GV2 to a contactor LC1D09…D25	25	Centre distance between mounting rails: 100…120 mm	10	**GV1G02**
"Large Spacing" adapter UL 60947-4-1 type E	-	For GV2P●● (except 32 A)	1	**GV2GH7**
Clip-in marker holders (supplied with each circuit breaker)	-	For GV2P, GV2L, GV2LE and GV2RT (8 x 22 mm)	100	**LA9D92**

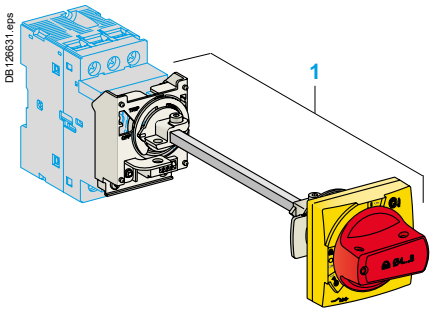

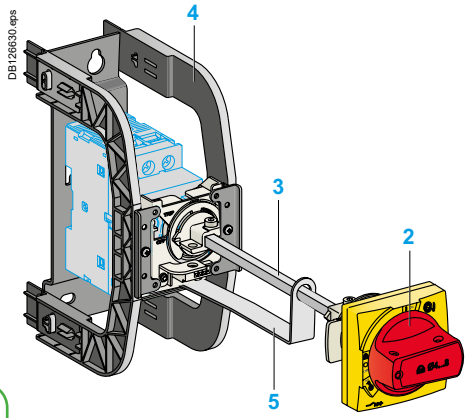

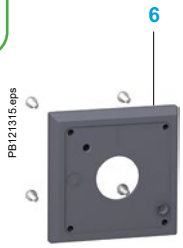

GVAPYPHP

Extended Rotary Handle

Allows a circuit breaker or a starter-controller installed in back of an enclosure to be operated from the front of the enclosure.
A rotary handle can be black or red/yellow, IP54 or IP65. It includes a function for locking the circuit breaker or the starter in the O (Off) for red/yellow handle, in the O (Off) or I (On) for black handle, by means of up to 3 padlocks with a shank diameter of 4 to 8 mm. The extended shaft must be adjusted to use in different size enclosures. The IP54 rotary handle is fixed with a nut (Ø22) to make easier the assembling. The new Laser Square tool brings the accuracy to align the circuit breaker and the rotary handle.

Padlockable external operators for ref. GV2P and GV2L

Description

1 Kit handle + mounting system
2 Universal handle
3 Shaft
4 Bracket
5 Shaft support plate for deep enclosure
6 Retrofit accessory
7 Laser Square accessory

Kit handle + mounting system				
Description			**Item**	**Reference**
For GV2P/L	Black handle, front plate, with trip status, IP 54		1	**GV2APN01**
	Red handle, front plate, with trip status, IP 54		1	**GV2APN02**
	Black handle, front plate, without trip status, IP 65		1	**GV2APN03**
	Red handle, front plate, without trip status, IP 65		1	**GV2APN04**
For GV2LE	Padlocking in “On” and “Off” position Black handle, blue front plate, IP 54		-	**GV2AP03**
Universal handle				
For GV2P/L	Black handle, with trip status, IP54		2	**GVAPB54**
	Red handle, with trip status, IP54 Red handle, without trip status, IP65		2 2	**GVAPR54** **GVAPR65**
External handle protection frame				
For GV2P/L	Yellow frame		1	**GVAPYPHP**
	Black frame		1	**GVAPBPHP**
Shaft				
For GV2P/L	L = 315 mm		3	**GVAPA1**
Bracket				
For GV2P/L			4	**GVAPH02**
Shaft support plate for deep enclosure				
For GV2P/L	Depth ⩾ 250 mm		5	**GVAPK11**
Retrofit accessory				
For GV2P/L			6	**GVAPP1**
Laser Square accessory				
For GV2P/L			7	**GVAPL01**
Sticker		**Sold in lots of**		
	For German	10	-	**GVAPSDE**
	For Chinese	10	-	**GVAPSCN**
	For Portuguese	10	-	**GVAPSPT**
	For Italian	10	-	**GVAPSIT**

Padlocking device

Description		Reference
For all GV2 device	For use with up to 4 padlocks, Ø6 mm shank max. (padlocks not included)	**GV2V03**

Dimensions, schemes:
page B6/91

TeSys Deca - Frame 3

11 to 45 kW

Product references

PB121697.tif

GV3L25

Motor circuit breakers from 11 to 45 kW / 400 V

Deca - Frame 3 (ref. GV3L): control by rotary knob, connection by EverLink® BTR screw connectors

Standard power ratings of 3-phase motors 50/60 Hz in category AC-3									Magnetic protection rating	Tripping current Id ± 20 %	Use in association with thermal overload relay (class 10 A)	Reference
400/415 V			500 V			690 V						
P	Icu	Ics [1]	P	Icu	Ics [1]	P	Icu	Ics [1]				
kW	kA		kW	kA		kW	kA		A	A		
11	100	100	**15**	12	50	**18.5**	6	50	25	350	LRD325	**GV3L25**
15	100	100	**18.5**	12	50	**22**	6	50	32	448	LRD332	**GV3L32**
18.5	50	100	**22**	12	50	**37**	6	50	40	560	LRD340	**GV3L40**
22	50	100	**30**	12	50	**45**	6	50	50	700	LRD350	**GV3L50**
30	50	100	**37**	12	50	**55**	6	50	65	910	LRD365	**GV3L65**
37	50	60	**45**	12	50	**55**	6	50	73	1120	LRD380	**GV3L73**
45	50	60	**45**	12	50	**55**	6	50	80	1120	LRD380	**GV3L80** [2]

Connection by lugs

To order these circuit breakers with connection by lugs, add the digit **6** to the end of reference selected above.
Example: ref. **GV3L32** becomes **GV3L326**.

(1) As % of Icu. Associated current limiter or fuses, where required.
(2) 750 A Lock Rotor Current max.
★ > 100 kA.

Characteristics: pages B6/102 to B6/104
Curves: pages B6/106 to B6/108
Dimensions, schemes: pages B6/115 to B6/117

Product references

PB121630.tif

GV3P80

Motor circuit breakers up to 45 kW / 400 V

Deca - Frame 3 (ref. GV3P): control by rotary knob, connection by EverLink® BTR screw connectors [5]

Standard power ratings of 3-phase motors 50/60 Hz in category AC-3									Setting range of thermal trips [2]	Magnetic tripping current Id ± 20 %	Reference
400/415 V			500 V			690 V					
P	Icu	Ics [1]	P	Icu	Ics [1]	P	Icu	Ics [1]			
kW	kA	%	kW	kA	%	kW	kA	%	A	A	
5.5	100	100	**7.5**	12	50	**11**	6	50	9…13	182	**GV3P13**
7.5	100	100	**9**	12	50	**15**	6	50	12…18	252	**GV3P18**
11	100	100	**15**	12	50	**18.5**	6	50	17…25	350	**GV3P25**
15	100	100	**18.5**	12	50	**22**	6	50	23…32	448	**GV3P32**
18.5	50	100	**22**	12	50	**37**	6	50	30…40	560	**GV3P40**
22	50	100	**30**	12	50	**45**	6	50	37…50	700	**GV3P50**
30	50	100	**45**	12	50	**55**	6	50	48…65	910	**GV3P65**
37	50	60	**45**	12	50	**55**	6	50	62...73	1120	**GV3P73**
45	50	60	**45**	12	50	**55**	6	50	70...80	1120	**GV3P80** [3]

Connection by EverLink® BTR screw connectors, for assembly with a contactor

To assemble a **GV3P32** to **P73** circuit breaker with an **LC1D40A** to **D73A** contactor, it is possible to use the circuit breaker supplied without downstream EverLink® power terminal block. To order this product, add the digit **1** to the end of the references selected above. Example: ref. **GV3P73** becomes **GV3P731**. Do not use direct mounting between **GV3P80** and **LC1D80A** because of potential overheating, use cable link.

Connection by lugs

To order thermal-magnetic circuit breakers with connection by lugs, add the digit **6** to the end of reference selected above. Example: **GV3P25** becomes **GV3P256.**

PB121675.eps

GV3P651

Motor circuit breakers up to 40 HP / 460 V, UL 60947-4-1 type E

Deca - Frame 3 - ref. GV3P13 to GV3P65

To obtain a motor-circuit breaker **GV3P**, UL 60947-4-1 type E, use the following with the circuit breaker:
- a "Large Spacing" cover **GV3G66**,
- a short-circuit signalling contact **GVAM11**.

Motor circuit breakers from 7.5 to 50 HP / 460 V

Deca - Frame 3 (ref. GV3P): control by rotary handle, connection by screw clamp terminals

Maximum Horsepower ratings [4]						Thermal setting (A)	Reference
Single-Phase		Three-Phase					
115 V	230 V	200 V	230 V	460 V	575 V		
1/2	1.5	3	3	7.5	10	9…13	**GV3P13**
3/4	2	3	5	7.5	10	12…18	**GV3P18**
1.5	3	5	7.5	15	20	17…25	**GV3P25**
2	3	7.5	7.5	20	25	23…32	**GV3P32**
3	5	10	10	25	30	30…40	**GV3P40**
3	7.5	10	10	30	40	37…50	**GV3P50**
3	10	15	15	40	50	48…65	**GV3P65**
5	15	20	25	50	60	62…73	**GV3P73**

PB121703.eps

GV3P736

Deca - Frame 3 - ref. GV3P13 to GV3P65 - with connection by lugs

To obtain a motor-circuit breaker ref. **GV3P**, UL 60947-4-1 type E, with connection by lugs, add the digit **6** to the end of reference selected above and use the following with the circuit breaker:
- two IP 20 covers **LAD96570**,
- a short-circuit signalling contact **GVAM11**.

(1) As % of Icu.
(2) The thermal trip setting must be within the range marked on the graduated knob.
(3) For applications with stable full load current with maximum 80 A and Lock Rotor Current maximum 750 A.
(4) 3P FLA corresponding values: see page A5/130.
(5) BTR screws: hexagon socket head. Requires the use of an insulated Allen key, in compliance with local wiring regulations.

Characteristics: pages B6/102 to B6/105
Curves: pages B6/109 to B6/111
Dimensions, schemes: pages B6/115 and B6/117

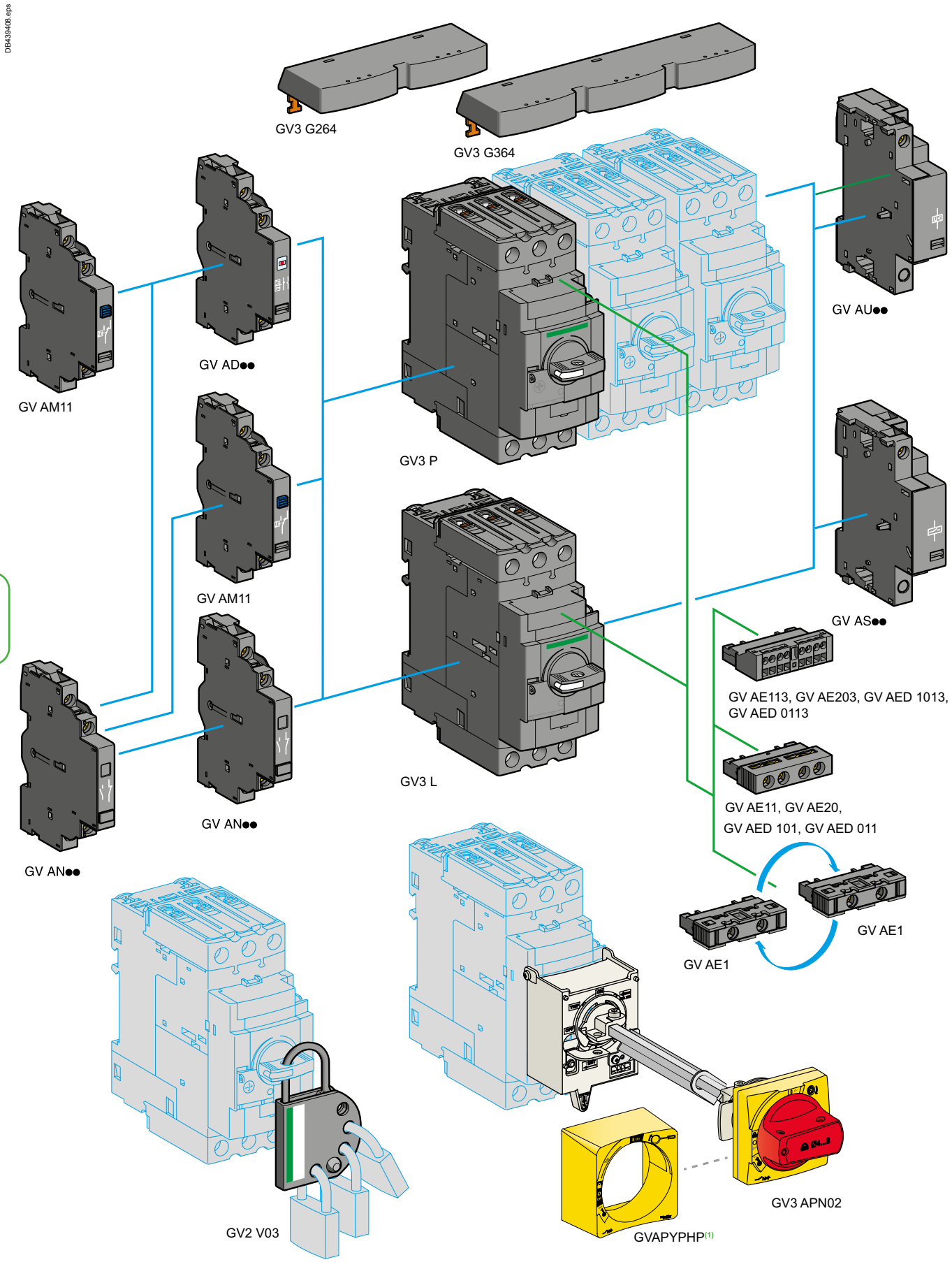

(1) Standard front plate must be removed from the assembly and replaced by Protective front plate (GVAPYPHP).

Life Is On Schneider Electric

Contact blocks

Description	Mounting	Maximum number	Type of contacts		Sold in lots of	Unit reference
Instantaneous auxiliary contacts	Front	1	N/O or N/C [1]		10	**GVAE1**
			N/O + N/C		10	**GVAE11** [2]
			N/O + N/O		10	**GVAE20** [2]
	Side (LH)	2	N/O + N/C		1	**GVAN11** [2]
			N/O + N/O		1	**GVAN20** [2]
Fault signalling contact + instantaneous auxiliary contact	Front	1	N/O (fault)	+ N/O	1	**GVAED101** [2]
			N/O (fault)	+ N/C	1	**GVAED011** [2]
	Side [3] (LH)	1	N/O (fault)	+ N/O	1	**GVAD1010**
				+ N/C	1	**GVAD1001**
			N/C (fault)	+ N/O	1	**GVAD0110**
				+ N/C	1	**GVAD0101**
Short-circuit signalling contact	Side (LH)	1	C/O common point		1	**GVAM11**

Electric trips - undervoltage or shunt [4]

Mounting	Voltage		Reference
Side (1 block on RH side of circuit breaker)	24 V	50 Hz	**GVA●025**
		60 Hz	**GVA●026**
	48 V	50 Hz	**GVA●055**
		60 Hz	**GVA●056**
	100	50 Hz	**GVA●107**
	100…110 V	60 Hz	**GVA●107**
	110…115 V	50 Hz	**GVA●115**
		60 Hz	**GVA●116**
	120…127 V	50 Hz	**GVA●125**
	127 V	60 Hz	**GVA●115**
	200 V	50 Hz	**GVA●207**
	200…220 V	60 Hz	**GVA●207**
	220…240 V	50 Hz	**GVA●225**
		60 Hz	**GVA●226**
	380…400 V	50 Hz	**GVA●385**
		60 Hz	**GVA●386**
	415…440 V	50 Hz	**GVA●415**
	415 V	60 Hz	**GVA●416**
	440 V	60 Hz	**GVA●385**
	480 V	60 Hz	**GVA●415**
	500 V	50 Hz	**GVA●505**
	600 V	60 Hz	**GVA●505**

Accessories

Description			Reference
Set of 3-pole busbars **Ie = 115 A** Pitch: 64 mm	2 tap-off	GV3P●● and GV3L●●	**GV3G264**
	3 tap-off	GV3P●● and GV3L●●	**GV3G364**
Cover "Large Spacing" UL 60947-4-1 type E (Only one cover required on supply side)		GV3P●●	**GV3G66**

PB108356.eps

GV3G66

(1) Choice of N/C or N/O contact operation, depending on which way round the reversible block is mounted.
*(2) Contact blocks available in version with spring terminal connections. Add a figure **3** at the end of the references selected above. Example: **GVAED101** becomes **GVAED1013**.*
*(3) The **GVAD●●** is always mounted next to the circuit breaker.*
*(4) To order an undervoltage trip: replace the dot (●) in the reference with a **U**, example: **GVAU025**.*
*To order a shunt trip: replace the dot (●) in the reference with an **S**, example: **GVAS025**.*

PB121324.eps

LV426992

LV426990

Limited torque throwaway bits

Torque limiting breakaway bits

Description	Sold in lots of	Reference
5 N.m Yellow	6	**LV426992**
9 N.m Green	6	**LV426990**

Characteristics: pages B6/112 to B6/114
Schemes: page B6/117

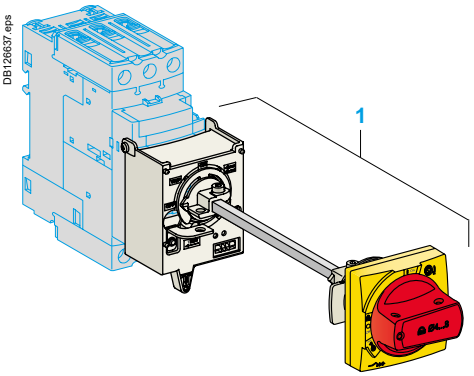

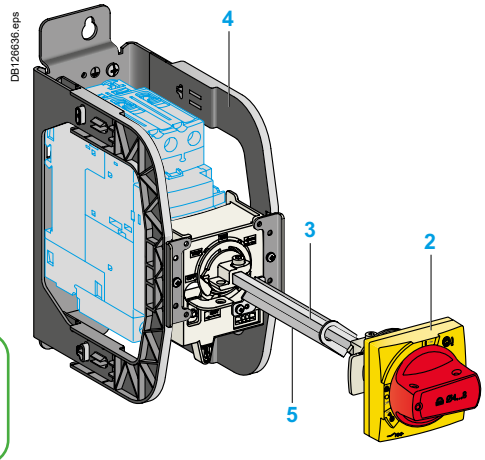

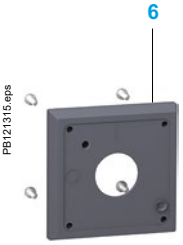

GVAPYPHP

Extended Rotary Handle

Allows a circuit breaker or a starter-controller installed in back of an enclosure to be operated from the front of the enclosure.
A rotary handle can be black or red/yellow, IP54 or IP65. It includes a function for locking the circuit breaker or the starter in the O (Off) or I (On) position (depending of the type of rotary handle) by means of up to 3 padlocks with a shank diameter of 4 to 8 mm. The extended shaft must be adjusted to use in different size enclosures. The IP54 rotary handle is fixed with a nut (Ø22) to make easier the assembling. The new Laser Square tool brings the accuracy to align the circuit breaker and the rotary handle.

Padlockable external operators for Deca - Frame 3

Description

1 Kit handle + mounting system
2 Universal handle
3 Shaft
4 Bracket
5 Shaft support plate for deep enclosure
6 Retrofit accessory
7 Laser Square accessory

Kit handle + mounting system				
Description			**Item**	**Reference**
For GV3P/L	Black handle, front plate, with trip status, IP 54		1	**GV3APN01**
	Red handle, front plate, with trip status, IP 54		1	**GV3APN02**
	Black handle, front plate, without trip status, IP65		1	**GV3APN03**
	Red handle, front plate, without trip status, IP 65		1	**GV3APN04**
Universal handle				
For GV3P/L	Black handle, with trip status, IP54		2	**GVAPB54**
	Red handle, with trip status, IP54		2	**GVAPR54**
	Red handle, without trip status IP65		2	**GVAPR65**
External handle protection frame				
For GV3P/L	Yellow frame		1	**GVAPYPHP**
	Black frame		1	**GVAPBPHP**
Shaft				
For GV3P/L	L = 315 mm		3	**GVAPA1**
Shaft support plate for deep enclosure				
For GV3P/L	Depth ⩾ 300 mm		5	**GVAPK12**
Retrofit accessory				
For GV3P/L			6	**GVAPP1**
Laser Square accessory				
For GV3P/L			7	**GVAPL01**
Sticker		**Sold in lots of**		
Warning label	For German	10	-	**GVAPSDE**
	For Chinese	10	-	**GVAPSCN**
	For Portuguese	10	-	**GVAPSPT**
	For Italian	10	-	**GVAPSIT**

Dimensions, schemes:
pages B6/116

TeSys Deca - Frame 4

0.25 to 55 kW - 1/2 to 60 HP

Protection

TeSys Deca - Frame 4 motor circuit breakers covers motor protection from 0.25 to 55 kW at 415 V AC (from 0.8 to 115 A) in one frame and are available in 3 breaking capacities: 25, 50 and 100 kA at 415 V AC IEC (15, 35, 65 kA at 480 V UL).

TeSys Deca - Frame 4 motor circuit breakers are available with 3 types of protection:
- Magnetic ref. GV4L: to be used with an overload relay or a drive
- Thermal-magnetic ref. GV4P: electronic protection with wide range setting, dual class (10 & 20)
- Multifunction motor protection ref. GV4PEM: ref. GV4P with adjustable advanced protections and possibility to have
a side module SDx for alarming and motor functional fault differentiation.

Power connection

TeSys Deca - Frame 4 motor circuit breaker come in standard with 2-holes EverLink™ power connectors with creep [(1)] compensation for bare copper cables. This Schneider Electric patented technique makes it possible to achieve accurate and durable tightening torque in order to avoid cable creep.
Products may be delivered with connectors for bars or cables with compression lugs (except for the ref. GV4PB).
Whatever, the connectors are field interchangeable and can be removed for the installation of one of both.
And to tight at the right torque power connections particularly in the field, torque limiting breakaway bits may be used.

DB425664.eps

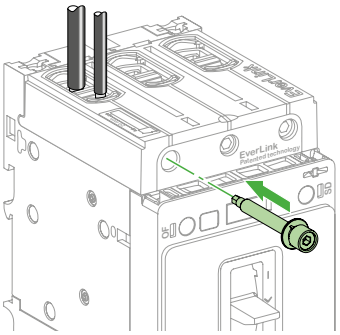

DB425926.eps

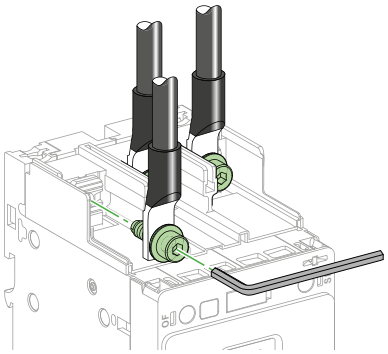

Mounting

TeSys Deca - Frame 4 motor circuit breaker can be mounted on a backplate or on a DIN rail (35 or 75 mm).

Handle

TeSys Deca - Frame 4 motor circuit breaker can be ordered with a toggle or a direct rotary handle (except for ref. GV4P Multifunction).
It is also possible to equip a toggle one with a direct rotary handle, or a front extended one, or a side one.

Auxiliaries

TeSys Deca - Frame 4 circuit breakers can be equipped with an open/close (OF) contact and a trip indication (SD) contact. These contacts are common point changeover type, with a normally open (NO) and a normally closed (NC) contact. TeSys Deca - Frame 4 motor circuit breaker may be equipped too with an MN (undervoltage release) or MX (shunt trip) coil.

Ref. GV4P Multifunction circuit breakers can be equipped with 1 or 2 SDx module(s) in order to have alarming and motor functional fault differentiation (SDx - See page B6/44)

Auxiliaries have spring connections for cables up to 1.5 mm².

DB424978.eps

OF **SD**

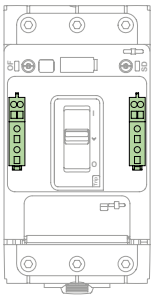

DB424979.eps

MN/MX

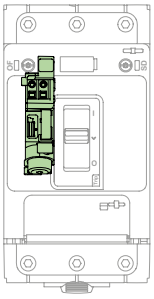

DB425752.eps

SDx

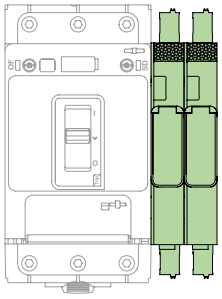

(1) Creep: normal crushing phenomenon of conductors, that is accentuated over time.

Introduction

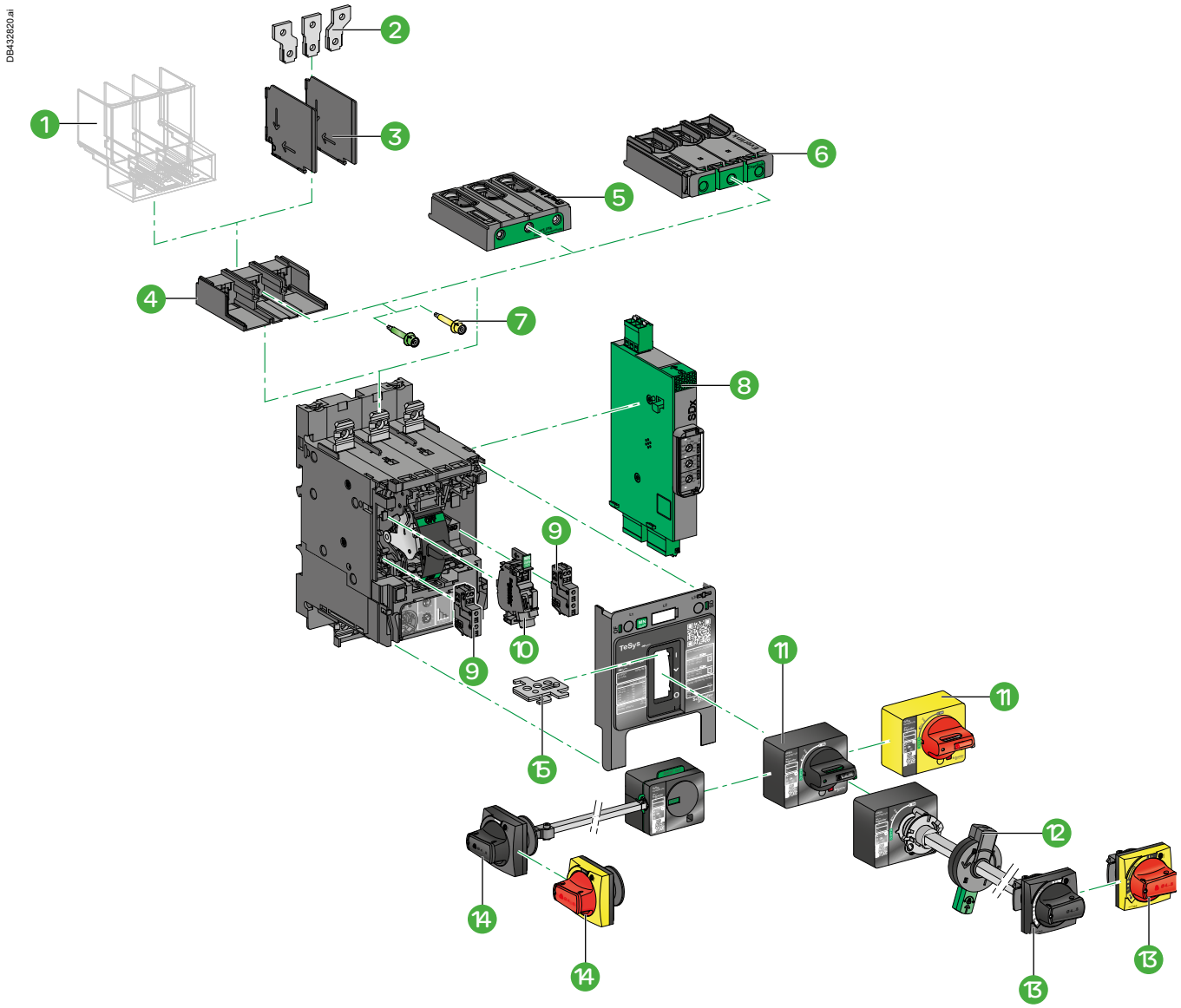

1. Long terminal shield **LAD96590**
2. Terminal spreaders **LV426940**
3. Interphase barriers **LV426920**
4. Crimp lug connector **GV4LUG**
5. EverLink® connector **LAD96595**
6. Everlink® terminals and large spacing cover **GV4G66 + LAD96595**
7. Torque limiting breakaway bits **LV42699●**
8. SDx alarming/fault differentiation module **GV4ADM1111** (only with GV4PEM)
9. Auxiliary contact block for OF or SD function **GV4AE11**
10. - MN undervoltage release **GV4AU●●**
    - MX shunt trip **GV4AS●●**
11. Direct mounting black or red on yellow bezel rotary handle **GV4ADN01/ GV4ADN02**
12. Open door shaft operator (for front extended rotary handle) **LV426937**
13. Front extended rotary handle kit with red handle on yellow bezel or black handle **GV4APN01/ GV4APN02 /GV4APN04**
14. Side rotary handle kit with red handle on yellow bezel or black handle **LV426935/LV426936**.
15. Toggle locking device **29370**

Introduction

PB114910.eps

GV4L

PB114909.eps

GV4LE

Standard version

Protection
Setting is made using dial.

Trip class (class)
Ref. GV4L can be used with class 5, 10 or 20 relay.

Short circuit protection (Ii)
Protection with an adjustable pick-up **Ii = 6 to 14 In**. Settings are made in amperes.

Standards and certifications
IEC/EN 60947-1, IEC/EN 60947-2, CCC, EAC.

References:
page B6/35
Characteristics:
pages B6/120 to B6/122
Curves:
pages B6/124 to B6/128
Dimensions, schemes:
pages B6/134, B6/135, B6/137

Product references

Magnetic motor circuit breakers from 0.25 to 55 kW

Standard power ratings of 3-phase motors - 50 / 60 Hz									In	Magnetic setting range (Ii)	Use in association with overload relay Class 10 or 20	Reference with EverLink terminals	
400/415 V			500 V			690 V							
P	Icu	Ics [1]	P	Icu	Ics [1]	P	Icu	Ics [1]				with toggle	with rotary handle
kW	kA	%	kW	kA	%	kW	kA	%	A	A			
0.25... 0.75	25	100	**0.37… 1.1**	10	100	**0.55… 1.5**	-	-	2	12… 28	LRD05 (0.63… 1A) LRD06 (1… 1.6A) LRD07 (1.6… 2.5A)	-	-
	50	100		25	100		8	25				**GV4LE02N**	**GV4L02N**
	100	100		30	100		10	25				**GV4LE02S**	-
0.55… 1.5	25	100	**0.75… 1.5**	10	100	**1.1… 2.2**	-	-	3,5	21… 49	LRD07 (1.6… 2.5A) LRD08 (2.5… 4A)	-	-
	50	100		25	100		8	25				**GV4LE03N**	**GV4L03N**
	100	100		30	100		10	25				**GV4LE03S**	-
1.5… 3	25	100	**2.2… 4**	10	100	**3… 7.5**	-	-	7	42… 98	LRD08 (2.5… 4A) LRD10 (4…6A)	-	-
	50	100		25	100		8	25				**GV4LE07N**	**GV4L07N**
	100	100		30	100		10	25				**GV4LE07S**	-
3… 5.5	25	100	**3… 7.5**	10	100	**5.5… 11**	-	-	12,5	75… 175	LRD12 (5.5… 8A) LRD14 (7… 10A) LRD313 (9…13A)	-	-
	50	100		25	100		8	25				**GV4LE12N**	**GV4L12N**
	100	100		30	100		10	25				**GV4LE12S**	-
5.5… 11	25	100	**7.5… 15**	10	100	**7.5… 18.5**	-	-	25	150… 350	LRD318 (12… 18A) LRD325 (17… 25A)	**GV4LE25B**	**GV4L25B**
	50	100		25	100		8	25				**GV4LE25N**	**GV4L25N**
	100	100		30	100		10	25				**GV4LE25S**	-
11… 22	25	100	**15… 30**	10	100	**18.5... 45**	-	-	50	300… 700	LRD332 (23… 32A) LRD340 (30… 40A) LRD350 (37… 50A)	**GV4LE50B**	**GV4L50B**
	50	100		25	100		8	25				**GV4LE50N**	**GV4L50N**
	100	100		30	100		10	25				**GV4LE50S**	-
18.5… 37	25	100	**22… 55**	10	100	**30… 55**	-	-	80	480… 1120	LRD365 (48… 65A) LRD3363 (63… 80A)	**GV4LE80B**	**GV4L80B**
	50	100		25	100		8	25				**GV4LE80N**	**GV4L80N**
	100	100		30	100		10	25				**GV4LE80S**	**GV4L80S**
30… 55	25	100	**30… 75**	10	100	**45… 90**	-	-	115	690… 1610	LR9D5567 (60… 100A) LR9F5367 (60… 100A) LR9D5369 (90… 150A) LR9F5369 (90…150A)	**GV4LE115B**	**GV4L115B**
	50	100		25	100		8	25				**GV4LE115N**	**GV4L115N**
	100	100		30	100		10	25				**GV4LE115S**	**GV4L115S**

Connection by lugs

To order circuit breakers with connection by lugs, add the digit **6** to the end of reference selected above. Example: ref. **GV4LE02N** becomes **GV4LE02N6**.

(1) As % of Icu.

Characteristics:
pages B6/120 to B6/122

Curves:
pages B6/124 to B6/128

Dimensions, schemes:
pages B6/134, B6/135, B6/137

GV4P

GV4PE

Standard version

Protection
Settings are made using dials.

Overload or thermal protection (Ir)
Inverse-time thermal protection against overloads with adjustable pick-up Ir.
Wide range setting made in amperes.
The tripping curve for the thermal protection, which indicates the time delay tr before tripping, is defined by the selected trip class.

Trip class (class)
The class is selected as a function of the normal motor starting time.
■ Class 10: starting time less than 10 s.
■ Class 20: starting time less than 20 s.
For a given class, it is necessary to check that all motor-feeder components are sized to carry the 7.2 Ir starting current without excessive temperature rise during the time corresponding to the class.

Short time delay protection (Isd)
Short time delay protection (around 100 ms) to let through motor starting currents, but to protect cables and motor starter devices and allow not to oversize them (particularly useful for wide range settings circuit breakers).
Fixed pick-up **Isd = 13 Ir.**

Short-circuit protection (Ii)
Instantaneous protection with non-adjustable pick-up **Ii=17 In**.

Phase unbalance or phase loss (Iunbal, tunbal)
This function opens the circuit breaker if a phase unbalance occurs:
■ that is greater than the 30 % of Irms (fixed pick-up): **Iunbal**
■ following the non-adjustable time delay (**tunbal**) equal to:
□ 0.7 s during starting
□ 4 s during normal operation.
Phase loss is an extreme case of phase unbalance and leads to tripping under the same conditions.

Ground-fault protection (Ig, tg)
Residual type ground-fault protection:
■ fixed pick-up **Ig = In**
■ fixed time delay **tg = 0.1 s.**

Indications

Front indications
■ Green “Ready” LED: flashes slowly when the circuit breaker is ready to trip in the event of an abnormal deviation in engine operating conditions.
■ Red alarm LED: goes ON when the thermal image of the motor is greater than 95 % of the permissible temperature rise.

Standards and certifications

IEC/EN 60947-1, IEC/EN 60947-2, IEC/EN 60947-4-1, UL 60497-4-1, CSA 22.2 n° 60497-4-1, CCC, EAC, CSA (cCSAus).

Product references

Thermal-magnetic motor circuit breakers from 0.25 to 55 kW

Standard power ratings of 3-phase motors - 50 / 60 Hz in category AC-3									Thermal setting range (Ir)	Reference with EverLink terminals	
400/415 V			500 V			690 V					
P	Icu	Ics [1]	P	Icu	Ics [1]	P	Icu	Ics [1]		with toggle	with rotary handle
kW	kA	%	kW	kA	%	kW	kA	%	A		
0.25... 0.75	25	100	**0.37... 1.1**	10	100	**0.55... 1.5**	-	-	0.8... 2	-	-
	50	100		25	100		8	25		**GV4PE02N**	**GV4P02N**
	100	100		30	100		10	25		**GV4PE02S**	-
0.55... 1.5	25	100	**0.75... 1.5**	10	100	**1.1... 2.2**	-	-	1.4... 3.5	-	-
	50	100		25	100		8	25		**GV4PE03N**	**GV4P03N**
	100	100		30	100		10	25		**GV4PE03S**	-
1.5... 3	25	100	**2.2... 4**	10	100	**3... 7.5**	-	-	2.9... 7	-	-
	50	100		25	100		8	25		**GV4PE07N**	**GV4P07N**
	100	100		30	100		10	25		**GV4PE07S**	-
3... 5.5	25	100	**3... 7.5**	10	100	**5.5... 11**	-	-	5... 12.5	-	-
	50	100		25	100		8	25		**GV4PE12N**	**GV4P12N**
	100	100		30	100		10	25		**GV4PE12S**	-
5.5... 11	25	100	**7.5... 15**	10	100	**7.5... 18.5**	-	-	10... 25	**GV4PE25B**	**GV4P25B**
	50	100		25	100		8	25		**GV4PE25N**	**GV4P25N**
	100	100		30	100		10	25		**GV4PE25S**	-
11... 22	25	100	**15... 30**	10	100	**18.5... 45**	-	-	20... 50	**GV4PE50B**	**GV4P50B**
	50	100		25	100		8	25		**GV4PE50N**	**GV4P50N**
	100	100		30	100		10	25		**GV4PE50S**	-
22... 37	25	100	**30... 55**	10	100	**37... 55**	-	-	40... 80	**GV4PE80B**	**GV4P80B**
	50	100		25	100		8	25		**GV4PE80N**	**GV4P80N**
	100	100		30	100		10	25		**GV4PE80S**	**GV4P80S**
37... 55	25	100	**45... 75**	10	100	**75... 90**	-	-	65... 115	**GV4PE115B**	**GV4P115B**
	50	100		25	100		8	25		**GV4PE115N**	**GV4P115N**
	100	100		30	100		10	25		**GV4PE115S**	**GV4P115S**

Thermal-magnetic motor circuit breakers from 3/4 to 75 HP / 480 V

Single-Phase				3-Phase								Rating	Reference with EverLink terminals	
120 V		240 V		208 V		240 V		480 V		600 V				
Power	FLA	Power	FLA	Power	FLA	Power	FLA	Power	FLA	Power	FLA		with toggle	with rotary handle
HP	A	Hp	A	Hp	A	Hp	A	Hp	A	Hp	A	A		
-	-	**1/10**	1.5	-	-	-	-	**3/4**	1.6	**1**	1.7	2	-	-
													GV4PE02N	**GV4P02N**
													GV4PE02S	-
1/10	3	**1/4**	2.9	**1/2**	2.4	**3/4**	3.2	**2**	3.4	**2**	2.7	3.5	-	-
													GV4PE03N	**GV4P03N**
													GV4PE03S	-
1/4	5.8	**3/4**	6.9	**1-1/2**	6.6	**2**	6.8	**3**	4.8	**5**	6.1	7	-	-
													GV4PE07N	**GV4P07N**
													GV4PE07S	-
1/2	9.8	**1-1/2**	10	**3**	10.6	**3**	9.6	**7-1/2**	11	10	11	12.5	-	-
													GV4PE12N	**GV4P12N**
													GV4PE12S	-
1-1/2	20	**3**	17	**5**	16.7	**7-1/2**	22	**15**	21	**20**	22	25	**GV4PE25B**	**GV4P25B**
													GV4PE25N	**GV4P25N**
													GV4PE25S	-
3	34	**7-1/2**	40	**10**	30.8	**15**	42	**30**	40	**40**	41	50	**GV4PE50B**	**GV4P50B**
													GV4PE50N	**GV4P50N**
													GV4PE50S	-
7-1/2	80	**15**	68	**25**	74.8	**30**	80	**60**	77	**75**	77	80	**GV4PE80B**	**GV4P80B**
													GV4PE80N	**GV4P80N**
													GV4PE80S	**GV4P80S**
10	100	**20**	88	**30**	88	**40**	104	**75**	96	**100**	99	115	**GV4PE115B**	**GV4P115B**
													GV4PE115N	**GV4P115N**
													GV4PE115S	**GV4P115S**

Connection by lugs

To order circuit breakers with connection by lugs, add the digit **6** to the end of reference selected above. Example: **GV4PE02N** becomes **GV4PE02N6**.

(1) As % of Icu.

Characteristics: pages B6/120 to B6/123
Curves: pages B6/129 to B6/131
Dimensions, schemes: pages B6/134, B6/135, B6/137

PB114917.eps

GV4PEM

Advanced version

Basic protection
Settings are made using dials.

Overloads or thermal protection (Ir)
Inverse-time thermal protection against overloads with adjustable pick-up Ir.
Wide range setting made in amperes.
The tripping curve for the thermal protection, which indicates the time delay tr before tripping, is defined by the selected trip class.

Trip class (class)
The class is selected as a function of the normal motor starting time.
■ Class 10: starting time less than 10 s.
■ Class 20: starting time less than 20 s.
For a given class, it is necessary to check that all motor-feeder components are sized to carry the 7.2 Ir starting current without excessive temperature rise during the time corresponding to the class.

Short-circuit protection (Ii)
Instantaneous protection with non-adjustable pick-up **Ii = 17 In**.

Advanced protection

Settings are made with an Android smartphone with dedicated application and using wireless NFC (Near Field Communication), or a computer with EcoStruxure Power Commission software and the configuration/maintenance tool kit (“Maintenance case” TRV00910).
The LV434206 pocket battery allows the GV4PEM controller to be powered for adjustments and tests when no internal source is available.

Short time delay protection (Isd)
Short time delay protection (around 100 ms) to let through motor starting currents, but to protect cables and motor starter devices and allow not to oversize them (particularly useful for wide range settings circuit breakers).
Adjustable pick-up **Isd = 5...13 Ir** (13 by default).

Phase unbalance or phase loss (Iunbal, tunbal)
This function opens the circuit breaker if a phase unbalance occurs:
■ that is greater than the 10…40 % of Irms (30% by default): **Iunbal**
■ following a time delay (**tunbal**) equal to:
□ 0.7 s during starting (non adjustable)
□ 1…10 s during normal operation (4 s by default).
Phase loss is an extreme case of phase unbalance and leads to tripping under the same conditions.

Ground-fault protection (Ig, tg)
Residual type ground-fault protection, with OFF position:
■ adjustable pick-up **Ig**:
□ 0.7…1 In for products with nominal current from 2 to 50 A
□ 0.4…1 In for products with nominal current from 80 to 115 A
■ adjustable time delay **tg** 0.1...0.4 s.

Jam (Ijam, tjam)
This function detects locking of the motor shaft caused by the load, with OFF position (OFF by default). During motor starting the function is disabled.
During normal operation, it causes tripping:
■ above the **Ijam** pick-up that can be fine-adjusted from 1.5 to 8 Ir
■ in conjunction with the **tjam** time delay that can be adjusted from 1 to 30 s.

Long start (Ilong, tlong)
This protection supplements thermal protection (class). It is used to optimize the protection according to the starting parameters, with OFF position (OFF by default).
It detects abnormal motor starting i.e. when the starting current remains too high or too low with respect to a pick-up value and a time delay.
It causes tripping:
■ in relation with a **Ilong** pick-up that can be fine-adjusted from 1.5 to 8 Ir
■ in conjunction with the **tlong** time delay that can be adjusted from 1 to 200 s.

Indications

Front indications
■ Green "Ready" LED: flashes slowly when the circuit breaker is ready to trip in the event of an abnormal deviation in engine operating conditions.
■ Red alarm LED: goes ON when the thermal image of the motor is greater than 95 % of the permissible temperature rise.

Remote indications via SDx module
See description on page B6/44.

Standards and certifications
IEC/EN 60947-1, IEC/EN 60947-2, IEC/EN 60947-4-1, UL 60497-4-1, CSA 22.2 n° 60497-4-1, CCC, EAC, CSA (cCSAus).

Product references

Advanced thermal-magnetic motor circuit breakers from 0.25 to 55 kW

Standard power ratings of 3-phase motors - 50 / 60 Hz in category AC-3									Thermal setting range (Ir)	"Reference with EverLink terminals"
400/415 V			500 V			690 V				
P	Icu	Ics [1]	P	Icu	Ics [1]	P	Icu	Ics [1]		with toggle
kW	kA	%	kW	kA	%	kW	kA	%	A	
0.25... 0.75	25	100	**0.37… 1.1**	10	100	**0.55… 1.5**	-	-	0.8… 2	**-**
	50	100		25	100		8	25		**GV4PEM02N**
	100	100		30	100		10	25		**GV4PEM02S**
0.55… 1.5	25	100	**0.75… 1.5**	10	100	**1.1… 2.2**	-	-	1.4… 3.5	**-**
	50	100		25	100		8	25		**GV4PEM03N**
	100	100		30	100		10	25		**GV4PEM03S**
1.5… 3	25	100	**2.2… 4**	10	100	**3… 7.5**	-	-	2.9… 7	**-**
	50	100		25	100		8	25		**GV4PEM07N**
	100	100		30	100		10	25		**GV4PEM07S**
3… 5.5	25	100	**3… 7.5**	10	100	**5.5… 11**	-	-	5… 12.5	**-**
	50	100		25	100		8	25		**GV4PEM12N**
	100	100		30	100		10	25		**GV4PEM12S**
5.5… 11	25	100	**7.5… 15**	10	100	**7.5… 18.5**	-	-	10… 25	**GV4PEM25B**
	50	100		25	100		8	25		**GV4PEM25N**
	100	100		30	100		10	25		**GV4PEM25S**
11… 22	25	100	**15… 30**	10	100	**18.5... 45**	-	-	20… 50	**GV4PEM50B**
	50	100		25	100		8	25		**GV4PEM50N**
	100	100		30	100		10	25		**GV4PEM50S**
22… 37	25	100	**30… 55**	10	100	**37… 55**	-	-	40… 80	**GV4PEM80B**
	50	100		25	100		8	25		**GV4PEM80N**
	100	100		30	100		10	25		**GV4PEM80S**
37… 55	25	100	**45… 75**	10	100	**75… 90**	-	-	65… 115	**GV4PEM115B**
	50	100		25	100		8	25		**GV4PEM115N**
	100	100		30	100		10	25		**GV4PEM115S**

Connection by lugs

To order circuit breakers with connection by lugs, add the digit **6** to the end of reference selected above. Example: **GV4PE02N** becomes **GV4PE02N6**.

(1) As % of Icu.

Characteristics:
pages B6/120 to B6/123

Curves:
pages B6/129 to B6/131

Dimensions, schemes:
pages B6/134, B6/135, B6/137

PB120622.eps

GV4PB

Advanced version

Ref. GV4PB is based on GV4PEM with specific tripping curve to follow UL489 SH supplement. It is designed with a large space connector in order to increase creepage and clearance distance.

Basic protection

Settings are made using dials.

Overloads or thermal protection (Ir)

Inverse-time thermal protection against overloads with adjustable pick-up Ir. Wide range setting made in amperes.
The tripping curve for the thermal protection, which indicates the time delay tr before tripping, is defined by the selected trip class.

Trip class (class)

The class is selected as a function of the normal motor starting time. It corresponds to the value of the tripping time delay for a current of 600 % of the rated tripping current according to UL489, SH supplement.
The rated tripping current is selected as 125 % of the dial value.
■ Class 10: starting time less than 10 s.
■ Class 20: starting time less than 20 s.
For a given class, it is necessary to check that all motor-feeder components are sized to withstand the 7.5 Ir starting current without excessive temperature rise during the time corresponding to the class.

Short-circuit protection (Ii)

Instantaneous protection with non-adjustable pick-up **Ii=17 In**.

Advanced protection (same as ref. GV4PEM)

Settings are made with:
■ Android smartphone using wireless NFC (Near Field Communication), or EcoStruxure Power Device App. computer + EcoStruxure Power Commission software and configuration/maintenance tool kit TRV00910
■ LV434206 pocket battery, allows the GV4PB controller to be powered for adjustment and test. LV434206 pocket battery needs to be connected to the GV4PB controller to set the advanced protection.

Short time delay protection (Isd)

Short time delay protection (around 100 ms) to let through motor starting currents, but to protect cables and motor starter devices and allow not to oversize them (particularly useful for wide range settings circuit breakers).
Adjustable pick-up **Isd = 5...13 Ir** (13 by default).

Phase unbalance or phase loss (Iunbal, tunbal)

This function opens the circuit breaker if a phase unbalance occurs:
■ that is greater than the 10…40 % of Irms (30 % by default): **Iunbal**
■ following a time delay **(tunbal)** equal to:
□ 0.7 s during starting (non adjustable)
□ 1…10 s during normal operation (4 s by default).
Phase loss is an extreme case of phase unbalance and leads to tripping under the same conditions.

Ground-fault protection (Ig, tg)

Residual type ground-fault protection, with OFF position:
■ adjustable pick-up **Ig**:
□ 0.7…1 In for products with nominal current from 2 to 50 A
□ 0.4…1 In for products with nominal current from 80 to 115 A
■ adjustable time delay **tg** 0.1...0.4 s.

Jam (Ijam, tjam)

This function detects locking of the motor shaft caused by the load, with OFF position (OFF by default). During motor starting the function is disabled.
During normal operation, it causes tripping:
■ above the **Ijam** pick-up that can be fine-adjusted from 1.5 to 8 Ir
■ in conjunction with the **tjam** time delay that can be adjusted from 1 to 30 s.

Long start (Ilong, tlong)

This protection supplements thermal protection (class). It is used to optimize the protection according to the starting parameters, with OFF position (OFF by default).
It detects abnormal motor starting i.e. when the starting current remains too high or too low with respect to a pick-up value and a time delay.
It causes tripping:
■ in relation with a **Ilong** pick-up that can be fine-adjusted from 1.5 to 8 Ir
■ in conjunction with the **tlong** time delay that can be adjusted from 1 to 200 s.

Indications

Front indications

■ Green "Ready" LED: flashes slowly when the circuit breaker is ready to trip in the event of an abnormal deviation in engine operating conditions.
■ Red alarm LED: goes ON when the thermal image of the motor is greater than 95 % of the permissible temperature rise

Remote indications via SDx module

See description on page B6/44.

Conforming to standards:

IEC/EN 60947-2, IEC/EN 60947-4-1

Product certifications:

UL 489, CSA C22.2 n°5.

Product references - UL applications

GV4PB - selection according to Short Circuit Current Rating (SCCR)

240 V AC SCCR kA	480Y/277 V AC SCCR kA	600Y/347 V AC SCCR kA	Reference
35	18	14	**GV4PB●●●B** (1)
65	35	18	**GV4PB●●●N**
100	65	25	**GV4PB●●●S**

*(1) Example: **GV4PB07S**, **GV4PB115S**.*

GV4PB thermal-magnetic motor circuit breakers - selection according to FLA

3P 200 V FLA A	3P 230 V FLA A	3P 460 V FLA A	Rated %	Dial range A	Reference		
-	-	1.6	100	0.8 to 2		**GV4PB02N**	**GV4PB02S**
2.5	2.2	3	100	1.4 to 3.5		**GV4PB03N**	**GV4PB03S**
4.8	4.2	4.8	100	2.9 to 7		**GV4PB07N**	**GV4PB07S**
7.8	9.6	7.6	100	5 to 12.5		**GV4PB12N**	**GV4PB12S**
17.5	22	21	100	10 to 25	**GV4PB25B**	**GV4PB25N**	**GV4PB25S**
48	42	40	100	20 to 50	**GV4PB50B**	**GV4PB50N**	**GV4PB50S**
62	54	52	80	40 to 80	**GV4PB80B**	**GV4PB80N**	**GV4PB80S**
92	80	77	80	65 to 115	**GV4PB115B**	**GV4PB115N**	**GV4PB115S**

Connection by lugs

Please order GV4LUG accessory and LV426920 interphase barriers or LAD96590 terminal shield.

Characteristics:
pages B6/120 to B6/123

Curves:
pages B6/129 to B6/131

Dimensions, schemes:
pages B6/134, B6/135, B6/137

GV4AE11 auxiliary contact block

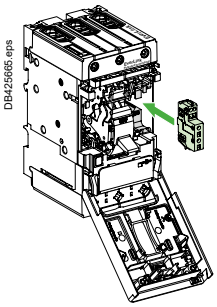

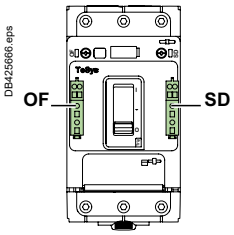

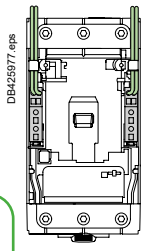

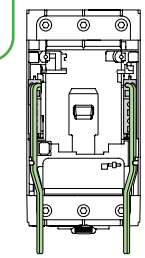

Pluggable auxiliary contact - OF or SD is dependent on cavity. Multiple internal wiring possibilities, even with long terminal shields

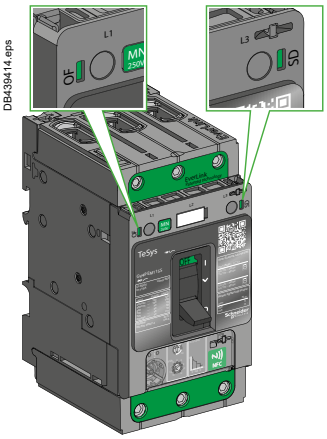

Visible presence of auxiliary contact block in OF or SD cavity

Auxiliary contact blocks

Auxiliary contacts give an indication of the circuit breaker status.
They can be used for remote visual signaling, alarming, electrical locking, relay activation, etc...
An auxiliary contact block provides one changeover contact with common point for OF or SD function, depending on the breaker cavity where it is inserted.

Auxiliary contact - Open/Close OF function

Indicates Open/Closed position of the circuit breaker contacts.

Auxiliary contact - Trip alarm SD function

■ Indicates that the circuit breaker has tripped due to:
□ Electrical fault (overload, short circuit, ...)
□ shunt trip
□ undervoltage release
□ "push-to-trip" button.
■ Resets when circuit breaker is reset.

Electrical characteristic

Characteristics						
Rated thermal current (A)		5				
Minimum load		2 mA at 17 V DC				
Utilization cat. (IEC 60947-5-1)		**AC12**	**AC15**	**DC12**	**DC13**	**DC14**
Operational current (A)	24 V AC/DC	5	5	5	2.5	1
	48 V AC/DC	5	5	2.5	1.2	0.2
	110...127 V AC / 110 V DC	5	4	0.6	0.35	0.05
	220/240 V AC	5	3	-	-	-
	250 V DC	-	-	0.3	0.05	0.03
	380/440 V AC	5	2.5	-	-	-
	660/690 V AC	5	0.11	-	-	-

Pilot duty B600 according UL508 and CSA 22.2 n°14.

Installation and connection

■ Auxiliary contact blocks snap into left (for OF function) and right (for SD function) cavities behind the front accessory cover of the circuit breaker and their presence is visible on the front face through green flags.
■ One model serves for all indication functions depending on where it is fitted in the circuit breaker.
■ Each NO and NC spring terminal may be connected by one 0.5...1.5 mm² flexible copper wire and by two for the common point.
■ Wires can be exited out of any of the four corners of the breaker under the accessory cover.

Description	Maximum number	Mounting	Type of contacts	Sold in lots of	Reference
Auxiliary contact block for OF or SD indication	2 (1 OF + 1 SD)	Internal plug-in	NO + NC	1	**GV4AE11**

Characteristics: page B6/133
Schemes: page B6/137

PB114963.eps

GV4AS137 shunt trip

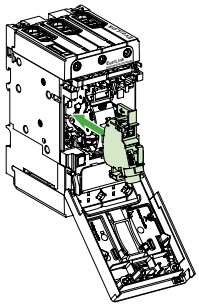

DB425667.eps

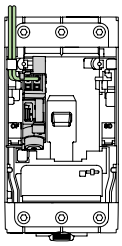

DB425668.eps

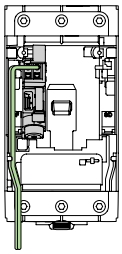

MN or MX plugged into cavity. Multiple internal wiring possibilities, even with long terminal shields

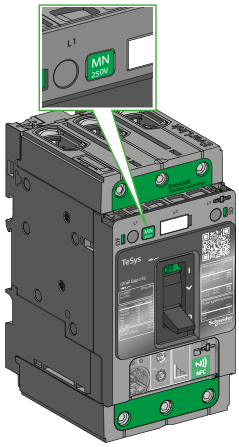

DB439415.eps

Visible presence of MN undervoltage release in circuit breaker cavity, visible rated voltage through the window.

MX shunt trip, MN undervoltage release

MX and MN trip the circuit breaker on a control signal. They are mainly used for remote and emergency-off commands.

It is advised to test the system every six months.

MX shunt trip

- Trips the circuit breaker when the control voltage rises above 70 % of its rated voltage (Un).
- Impulse type ⩾ 20 ms or maintained control signals.
- Shunt trip 110...130 V AC is suitable for ground-fault protection when combined with a Class I ground-fault sensing element.
- Continuous duty rated coil [(1)].

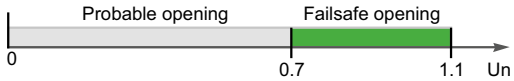

DB432869.eps

Opening conditions of the MX release.

MN undervoltage release

- Trips the circuit breaker when the control voltage drops below 35 % of its rated voltage.
- Between 35 % and 70 % of the rated voltage opening is only probable.
- Above 70 % of the rated voltage, opening does not take place.
- Continuous duty rated coil.
- Circuit breaker closing is possible only if the voltage exceeds 85 % of the rated voltage. If an undervoltage condition exists, operation of the closing mechanism of the circuit breaker will not permit the main contacts to touch, even momentarily. This is commonly called "Kiss Free".

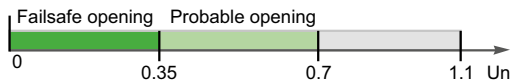

DB432866.eps

Opening conditions of the MN release.

DB432867.eps

Closing conditions of the MN release.

Installation, connection

Accessories snap into cavities under the circuit breaker front accessory cover. Spring-type terminals in order to insure a fast and reliable connection to 0.5...1.5 mm² flexible copper wire (one per terminal).

Operation

Circuit breaker must be locally reset after trip by shunt trip (MX) or undervoltage release (MN).Tripping by MX or MN has priority over manual closing; in the presence of a standing trip order such an action does not result in main contacts closing, even temporarily.

Description	Maximum number	Mounting	Voltage	Reference
MX Shunt trip	1	Internal, plug-in	24 V∿ 50/60 Hz, 24 V⎓	**GV4AS027**
			48 V∿ 50/60 Hz, 48 V⎓	**GV4AS057**
			110-130 V∿ 50/60 Hz 125 V⎓	**GV4AS137**
			220-240 V∿ 50 Hz, 208-240 V∿ 60 Hz, 277 V 60 Hz	**GV4AS287**
			380-415 V∿ 50 Hz, 440-480 V∿ 60 Hz	**GV4AS487**
MN undervoltage release	1	Internal, plug-in	24 V∿ 50/60 Hz, 24 V⎓	**GV4AU027**
			48 V∿ 50/60 Hz, 48 V⎓	**GV4AU057**
			110-130 V∿ 50/60 Hz 125 V⎓	**GV4AU137**
			220-240 V∿ 50 Hz, 208-240 V∿ 60 Hz	**GV4AU247**
			277 V∿ 60 hZ	**GV4AU286**
			380-415 V∿ 50 Hz	**GV4AU415**
			440-480 V∿ 60 Hz	**GV4AU486**

(1) Except for MX 24 V AC/DC (in case of continuous activation, may generate some minor perturbation in sensitive environment).

Characteristics:
page B6/132

Schemes:
page B6/137

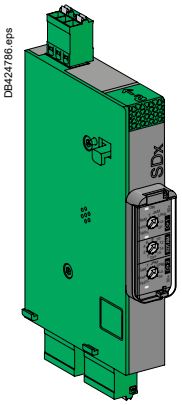

GV4ADM1111 SDx contact module

SDx contact module for GV4PEM, GV4PB (Multifunction)

The SDx provides alarming and functional fault differentiation for GV4PEM, GV4PB (Multifunction) circuit breaker. This module has 2 NO/NC outputs dry contacts which can be assigned with one of the 8 following SD status:
- SD**T95%** overload alarm: thermal image of the motor is greater than 95 % of the permissible temperature rise.
- SD**Txxs** overload alarm: circuit breaker will trip in xx seconds with the same load. xx is adjustable between 10 to 40 seconds (default 20 seconds) on the circuit breaker itself through NFC or a computer with EcoStruxure Power Commission software and an interface module (TRV00911).
- SD**TAM** overload alarm just before tripping: in the event of a phase unbalance, overload, or on a jam fault, this output is activated to open the contactor and avoid circuit breaker tripping. In that case, contact can be manually or automatically reset after an adjustable cooling time from 1 to 15 minutes. If after a 400 ms delay the motor is not stopped, the circuit breaker will trip.
- SD**T** overload trip indication: circuit breaker has tripped due to an overload fault
- SD**JAM** jam trip indication: circuit breaker has tripped due to a jam fault
- SD**UNB** phase unbalance trip indication: circuit breaker has tripped due to an unbalance fault
- SD**LS** long start trip indication: circuit breaker has tripped due to a long start fault
- SD**GF** ground-fault trip indication: circuit breaker has tripped due to a ground-fault.

Outputs are automatically reset either when alarm disappears or when the circuit breaker is restarted.

Output characteristics
- 2 NO/NC dry contacts
- 24...250 V AC/DC
- Minimum load: 2 mA under 24 V DC
- Max load: 5 A
- AC15 (230 V max - 400 VA)
- DC13 (24 V - 50 W)

Power characteristics
- 24...240 V AC/DC

Contact rating (per UL/CSA B300 & R300)

Standard	Rated Voltage Ue	Operational Current Ie	Make	Break	Ithe
		A	VA	VA	A
B300	120 V AC	3	3600	360	5
	240 V AC	1.5			
R300	125 V DC	0.22	28	28	1
	250 V DC	0.1			

The rated operational current Ie (A), the rated operational voltage Ue (V) and the break apparent power B (V.A) are correlated by the formula B = Ue · Ie; with Ie ≤ Ith.

Installation, connection, settings and indication

The SDx module is clipped on the right side of the circuit breaker. Each removable spring terminal can be connected by one 0.5... 1.5 mm² copper wire. Settings and indications are available on the front face.

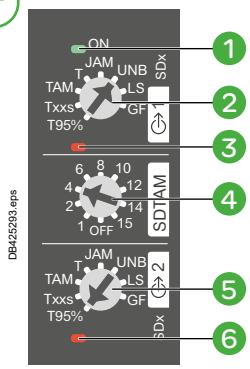

1. Green led lighted when the module is powered.
2. Output 1: SD status assignment.
3. Red led lighted when output 1 is activated.
4. Cooling time setting before automatic restart (OFF – 1…15 min).
5. Output 2: SD status assignment.
6. Red led lighted when output 2 is activated.

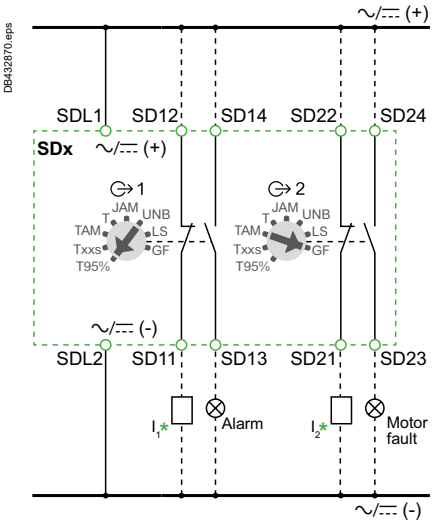

* I1, I2: PLC digital inputs - used as alarm inputs, as an example.

SDx wiring diagram

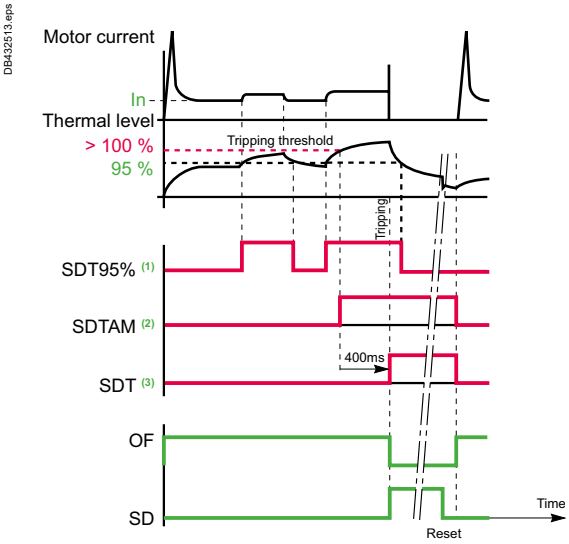

GV4PEM curves
SDx modules curves
Aux. contacts curves

(1) SDT95% (= 95% overload)
(2) SDTAM (overload tripping pre alarm) here not connected to any contactor coil
(3) SDT (= tripping on thermal fault)

Description	Mounting	Maximum number	Type of contacts	Unit reference
SDx: alarming / fault differentiation module	Side	2	N/O / N/C	**GV4ADM1111**

Dimensions:
pages B6/136 and B6/137

Schemes:
page B6/137

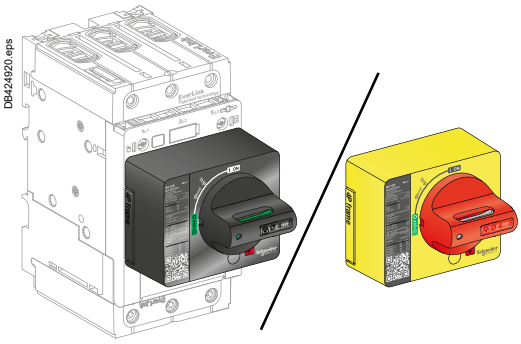

Direct mounting rotary handle

GV4ADN02 direct mounting rotary handle

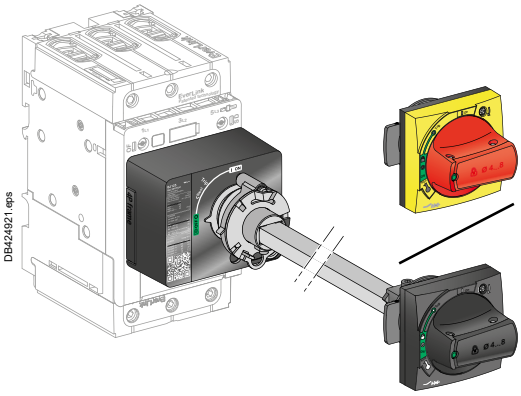

Front extended rotary handle (door-mounting)

GV4APN01 front extended rotary handle kit

GVAPL01 laser tool

Direct mounting rotary handles

Installation
The direct mounting rotary handle has to be mounted by 3 screws on the front accessory cover.

Operation
The direct mounting rotary handle maintains:
- suitability for isolation
- indication of the three positions OFF (**O**), ON (**I**) and tripped (**Trip**)
- access to the "push-to-trip" button
- visibility and access to the trip unit.

Device padlocking
The circuit breaker may be locked in the OFF position by using one to three padlocks (not supplied) or in ON position after customer modification of the rotary handle before installation, padlock shackle Ø4-8 mm. Locking in the ON position does not prevent the circuit breaker from tripping if a circuit or motor malfunction occurs. In this case, the handle remains in the ON position after the circuit breaker trips. Unlocking is required for the handle to go to the tripped then the OFF position.

Variations: door locking
Door locking built-in functionality can be activated by the customer to prevent opening the door when the circuit breaker is ON or in trip position. For exceptional situations, door locking can be temporarily disabled with a tool by qualified personnel to open the door when the circuit breaker is closed.

Description	Type	Degree of protection	Reference
Direct mounting rotary handle	Black handle	IP40	**GV4ADN01**
	Red handle on yellow bezel (VDE standard, for machine control)	IP40	**GV4ADN02**

Front extended rotary handles

Installation
The door-mounted (extended) rotary handle is made up of:
- a unit that has to be screwed on the front accessory cover of the circuit breaker
- an assembly (handle mechanism and front plate) on the door that is always secured in the same position, whether the circuit breaker is installed vertically or horizontally
- an adjustable extension shaft.

The handle mechanism is fixed with a nut (Ø22 mm) to make assembly easier. The Laser Square tool (GVAPL01) can be used to accurately align the hole on the door with the circuit breaker.

Operation when door is closed
The door mounted handle makes it possible to operate a circuit breaker installed in an enclosure from the front. The door mounted operating handle maintains:
- suitability for isolation
- indication of the three positions OFF (**O**), ON (**I**) and tripped (**Trip**)
- visibility and access to trip unit when the door is open
- degree of protection of the handle on the door: IP54 or IP65 as per IEC 60529.

Mechanical door locking when device closed
A standard feature of the extended rotary handle is a locking function, built into the shaft, that disables door opening when the circuit breaker is in the ON or tripped positions.
Door locking can be temporarily disabled with a tool by qualified personnel to open the door without opening the circuit breaker. This operation is not possible if the handle is locked by a padlock.

Device and door padlocking
Padlocking locks the circuit breaker handle and disables door opening:
- standard situation, in the OFF position, using 1 to 3 padlocks, shackle Ø4-8 mm, padlocks are not supplied
- for the black handle, with a voluntary modification of the door handle (to be done by the customer during installation), in the ON and OFF positions. Locking in the ON position does not prevent the circuit breaker from tripping if a circuit or motor malfunction occurs. In this case, the handle remains in the ON position after the circuit breaker trips. Unlocking is required for the handle to go to the tripped then the OFF position.

Shaft length
The shaft length is the distance between the back of the circuit breaker and the door:
- minimum shaft length is 214 mm
- maximum shaft length is 627 mm
- shaft length must be adjusted.

Dimensions:
pages B6/134 to B6/136

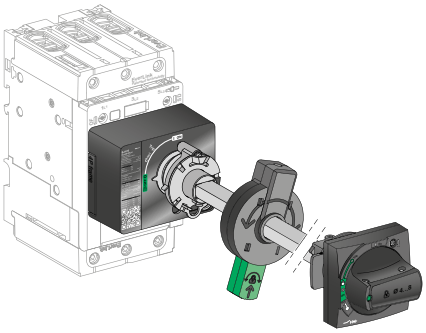

Open door shaft operator mounted on front extended rotary handle assembly

GV4APN01
Front extended rotary handle kit

LV426937
Open door shaft operator

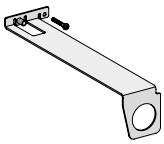

LV426938
Support arm for extended rotary handle

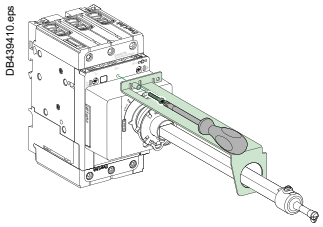

GVAPL01 - Laser tool

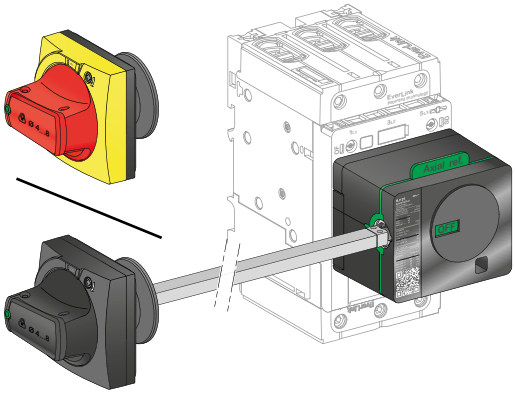

Side extended rotary handle (cover mounting)

LV426936 - Side rotary handle kit

LV426998, LV426997 - Universal handles

Front extended rotary handles (cont.)

Operation when door is opened
An open door shaft operator can be used to operate the circuit breaker when door is opened. This accessory complies with UL508 A.
The indication of the three positions OFF (**O**), ON (**I**) and tripped (**Trip**) is visible on the circuit breaker.
The circuit breaker itself may be locked in OFF position when the door is opened by 1 padlock / lockout hasp, shackle Ø4-8 mm.

Description	Type	Degree of protection	Reference
Front extended rotary handle kit	Black handle	IP54	**GV4APN01**
	Red handle on yellow bezel	IP54	**GV4APN02**
		IP65	**GV4APN04**
Open door shaft operator			**LV426937**
Support arm for extended rotary handle			**LV426938**
Laser tool			**GVAPL01**
Spare part: GV4 universal handle (for replacement of front. ext. or side rotary handle)	Black handle	IP54	**LV426997**
	Red handle on yellow bezel	IP54	**LV426998**
		IP65	**LV426999**

Side rotary handles (left or right)

Installation
The side-mounted rotary handle is made up of:
- a unit that has to be screwed on the front accessory cover of the circuit breaker
- an assembly (handle and front plate) on the side (left or right) of the enclosure
- an adjustable extension shaft

The handle mechanism is fixed with a nut (Ø22 mm) to make assembly easier.

Operation
The side mounted rotary handle makes it possible to operate circuit breakers installed in enclosure from the side. The side mounted rotary handle maintains:
- suitability for isolation
- indication of the three positions OFF (**O**), ON (**I**) and tripped (**Trip**). Moreover, the position is visible on the circuit breaker itself
- visibility and access to trip unit when the door is open
- degree of protection of the handle on the side: IP54 or IP65 as per IEC 529.

Device padlocking
The circuit breaker may be locked in the OFF position, or, for the black rotary handle only, in ON position after voluntary modification of the side handle (to be done by the customer during installation), by using one to three padlocks, padlock shackle Ø4-8 mm ; padlocks are not supplied.
Locking in the ON position does not prevent free circuit breaker from tripping if a circuit or motor malfunction occurs. In this case, the handle remains in the ON position after the circuit breaker tripping. Unlocking is required to go to the tripped then the OFF position.

Shaft length
The shaft length is the distance between the side of the circuit breaker and the side of the enclosure:
- minimum shaft length is 45 mm
- maximum shaft length is 480 mm
- shaft length must be adjusted.

Description	Type	Degree of protection	Reference
Side rotary handle kit	Black handle	IP54	**LV426935**
	Red handle on yellow bezel (VDE standard, for machine control)	IP54 (1)	**LV426936**
Spare part: GV4 universal handle (for replacement of front. ext. or side rotary handle)	Black handle	IP54	**LV426997**
	Red handle on yellow bezel	IP54	**LV426998**
		IP65	**LV426999**

*(1) IP65 possible with **LV426935** kit (Black handle not used) + **LV426999** Red handle on yellow bezel universal handle.*

Dimensions:
page B6/136

Handle padlocking devices

Padlocking systems can receive up to three padlocks with diameters of 5-8 mm (4-8 mm for rotary handles); padlocks not supplied. Locking in the OFF position guarantees isolation as per IEC 60947-2.

Direct rotary handle padlocking
By padlock – No accessory required.
- Lock in OFF position.
- Lock in ON position with simple mechanism modification.

Front Extended /Side rotary handle padlocking
By padlock – No accessory required.
- Lock in OFF position.
- Lock in ON position with simple mechanism modification (black handle only).

Door opening prevented.

Toggle handle padlocking
By padlock – removable toggle locking device required **29370**.
- Lock in OFF position.

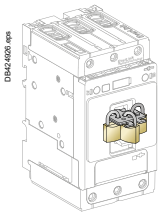

3 padlocks mounted on 29370 toggle locking device

29370 removable toggle locking device

Description	Reference
Removable toggle locking device for 1 to 3 padlocks	**29370**

Sealing devices

Control type	■ Front removal. ■ Access to auxiliaries.	■ Access to settings and test connector.
Toggle	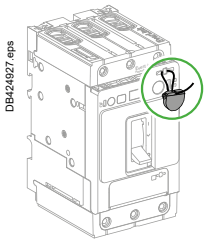	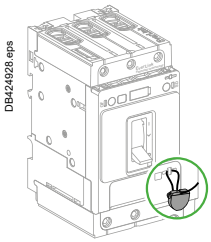
Rotary handle	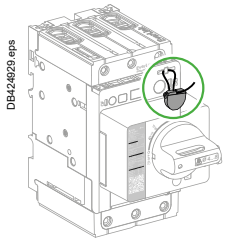	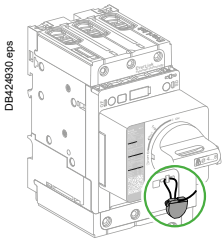

LV429375 leads + sealing accessories

Description	Reference
Bag of 6 leads + 6 sealing accessories	**LV429375**

Product references

LAD96595
EverLink connector

EverLink power connection

Description	Reference
EverLink connector	**LAD96595**

GV4LUG
crimped lug connector

LAD96590
transparent terminal shield

LV426920
interphase barriers

LV426940
spreader 3-pole

LV426990
9 N.m green throwaway bits

LV426992
5 N.m yellow throwaway bits

Crimp lug/busbar connection

Description		Sold in lots of	Reference
Crimped lug connector + screws		1	**GV4LUG**
Transparent terminal shield for crimped lug connector		1	**LAD96590**
Interphase barriers		6	**LV426920**
Spreader 3-pole	To increase the pitch to 35 mm	1	**LV426940**

Limited torque throwaway bits

Description	Sold in lots of	Reference
Green - 9 N.m	6	**LV426990**
Yellow - 5 N.m	6	**LV426992**

Note: *torque limiting breakaway bits may be used, particularly in the field, to tighten at the right torque EverLink™ or compression lug power connections.*

LV434206
pocket battery

TRV00910
maintenance case

TRV00911
Spare USB maintenance interface

TRV00915
spare power supply 110-240 V AC

TRV00917
spare GV4PEM cord for USB maintenance interface

Test tool, software, demo for GV4PEM

Test tool

Pocket battery Allows the ref. GV4PEM or GV4PB controller to be powered for adjustments and tests when no internal source is available.	**LV434206**
Maintenance case Comprising: ■ USB maintenance interface ■ Power supply ■ GV4PEM cord ■ USB cord ■ RJ45/RJ45 male cord	**TRV00910**
Spare USB maintenance interface	**TRV00911**
USB interface spare power supply, 110-240 V AC, with 4 different socket adapters	**TRV00915**
Spare cord for connecting GV4PEM to USB maintenance interface	**TRV00917**

Software

Configuration and setting software EcoStruxure Power Commission	**Free download**

TeSys Giga - Frame 5, 6

55 to 250 kW

PB120638.eps

GV5P220F

Thermal-magnetic circuit breakers Frame 5 with screw clamp terminals up to 110 kW (1)

Control by direct rotary handle

Standard power ratings of 3-phase motors 50/60 Hz in category AC-3									Thermal setting range (Ir)	Reference	Weight
400/415 V			500 V			660/690 V					
P	Icu	Ics (2)	P	Icu	Ics (2)	P	Icu	Ics (2)			
kW	kA	%	kW	kA	%	kW	kA	%	A		kg
55...75	36	100	**75...90**	30	100	**90... 110**	8	100	70…150	**GV5P150F**	2.4
	70	100		50	100		10	100		**GV5P150H**	
90...110	36	100	**110**	30	100	**110...132**	8	100	100…220	**GV5P220F**	2.6
	70	100		50	100		10	100		**GV5P220H**	

(1) Breakers have to be used with suitable rating of contactors, as defined in section A6.
(2) As % of Icu.

PB120633.eps

GV6P320F

Thermal-magnetic circuit breakers Frame 6 with screw clamp terminals up to 250 kW (1)

Control by direct rotary handle

Standard power ratings of 3-phase motors 50/60 Hz in category AC-3									Thermal setting range (Ir)	Reference	Weight
400/415 V			500 V			660/690 V					
P	Icu	Ics (2)	P	Icu	Ics (2)	P	Icu	Ics (2)			
kW	kA	%	kW	kA	%	kW	kA	%	A		kg
132...160	36	100	**160...200**	25	100	**200...250**	10	100	160…320	**GV6P320F**	6.5
	70	100		50	100		10	100		**GV6P320H**	
200...250	36	100	**250...315**	25	100	**315...400**	10	100	250…500	**GV6P500F**	6.7
	70	100		50	100		10	100		**GV6P500H**	

(1) Breakers have to be used with suitable rating of contactors, as defined in section A6.
(2) As % of Icu.

Thermal-magnetic circuit breakers Frame 5/6 with screw clamp terminals (1)

Control by direct rotary handle

Thermal setting	3-Phase			Standard breaking capacity	High breaking capacity
	230 V	460 V	575 V		
A	HP	HP	HP	Reference	Reference
90…150	50	100	150	**GV5P150F**	**GV5P150H**
133…220	75	150	200	**GV5P220F**	**GV5P220H**
160…320	125	250	300	**GV6P320F**	**GV6P320H**
250…500	150	350	500	**GV6P500F**	**GV6P500H**

(1) Breakers have to be used with suitable rating of contactors, as defined in section A6.

Characteristics:
page B6/140

Curves:
pages B6/141 to B6/143

Dimensions:
pages B6/146 to B6/152

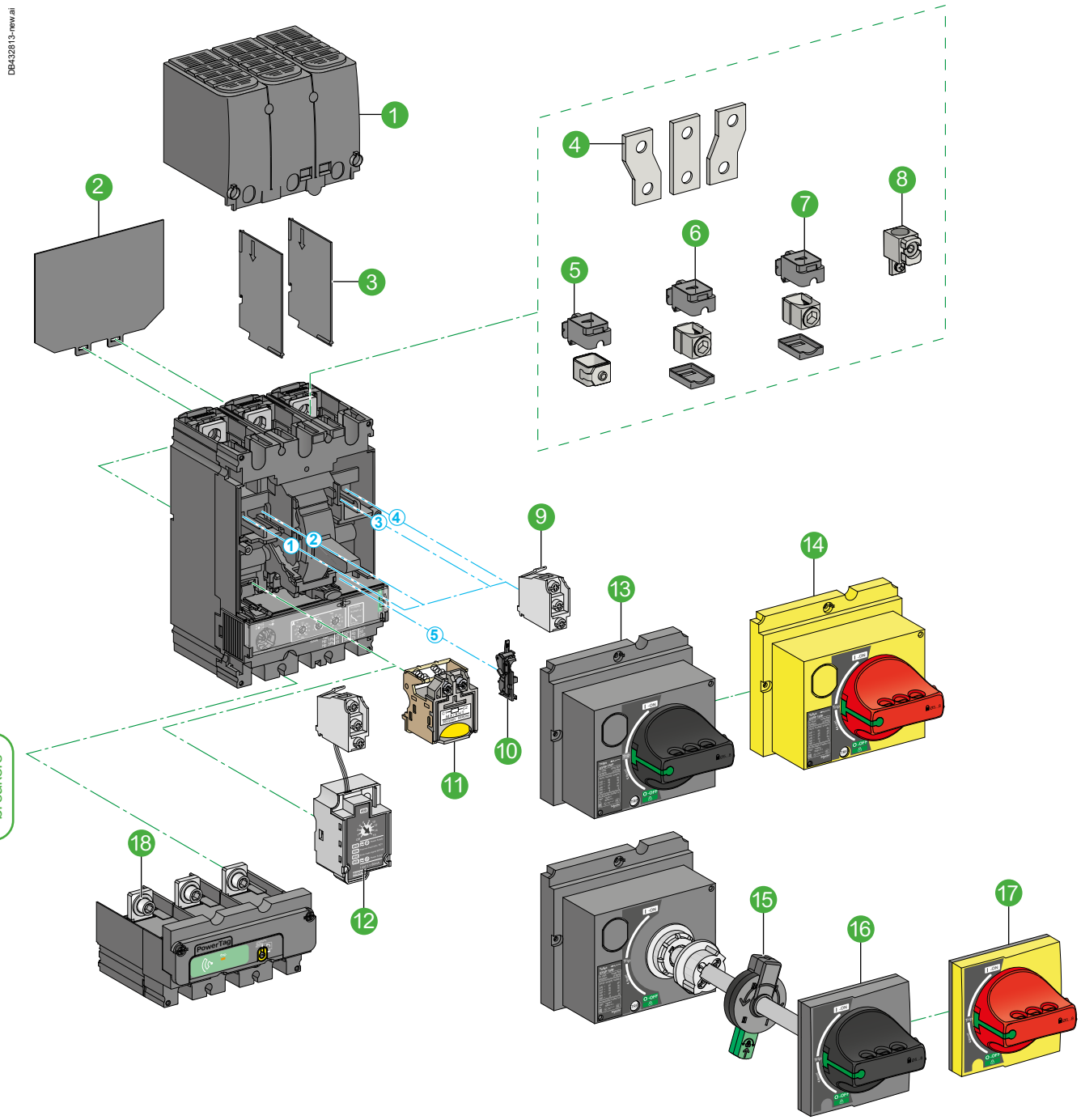

1...5: function related to each contact location, please refer to B6/54.

1. Terminal shield **GV7AC01**
2. Insulating screen **GV7AC05**
3. Interphase barriers **GV7AC04**
4. Spreaders 45 mm **GV7AC03**
5. Steel connector **GV7AC021** (1.5-95 mm²)
6. Aluminum connector **LV429227** (25-95 mm²)
7. Aluminum connector **GV7AC022** (120-185 mm²)
8. Aluminum connector **LV429244** (120-240 mm²)
9. OF, SD, or SDE indication contacts **29450** (standard) / **29452** (for low level)
10. SDE adapter **LV429451**
11. UVR or SHT voltage release **LV42940●/LV42938●**
12. SDTAM thermal fault module **LV429424**
13. Direct rotary handle black **GV5AP03** (shipped with the device)
14. Direct rotary handle red on yellow bezel **GV7AP04**
15. Open door shaft operator **LV426937**
16. Extended rotary handle black **GV7AP01**
17. Extended rotary handle red on yellow bezel **GV7AP02**
18. PowerTag M250 wireless energy sensor **LV434020**

Life Is On Schneider Electric

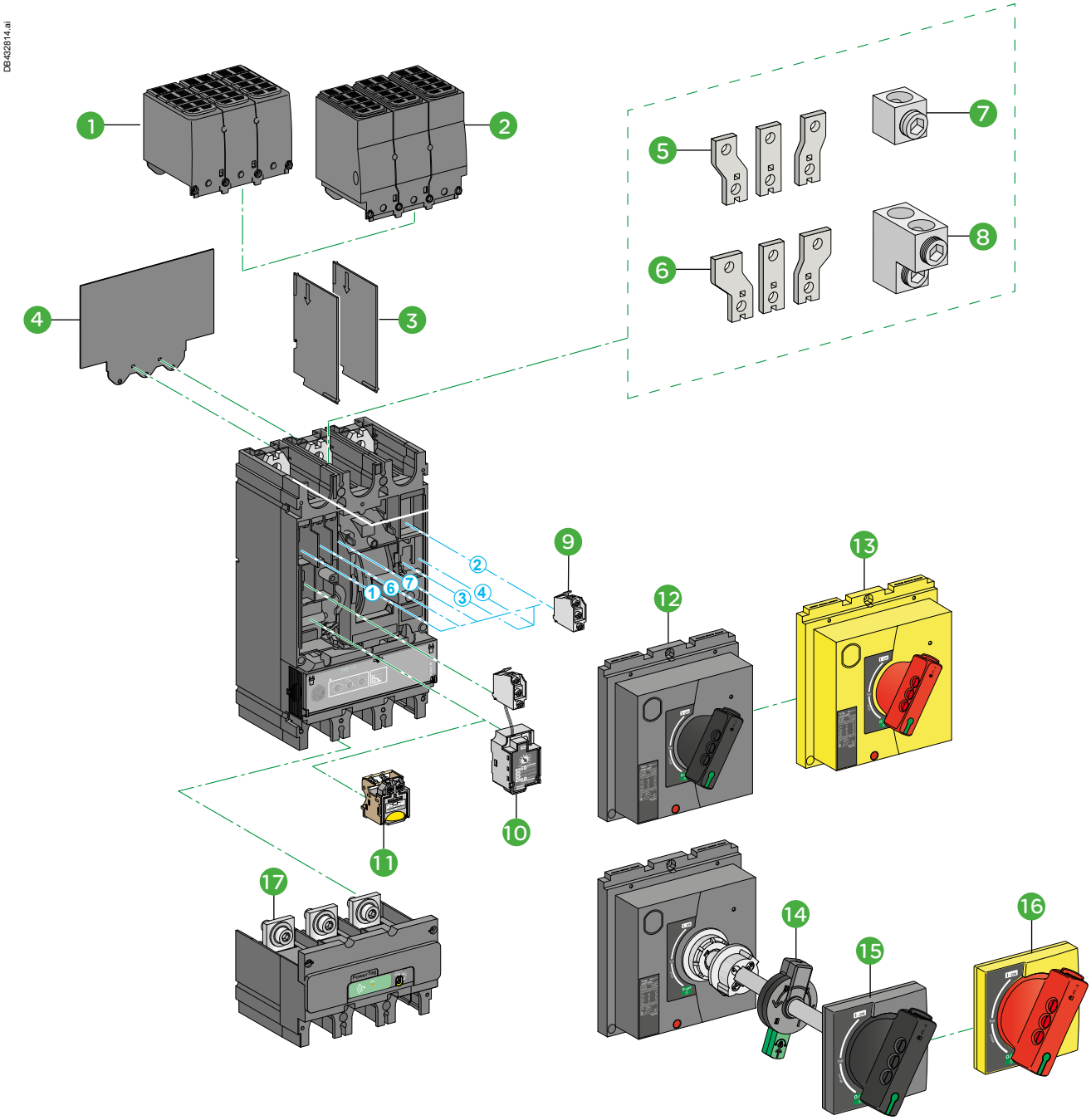

1...7: function related to each contact location, please refer to B6/54.

1. Terminal shield 45 mm **LV432593**
2. Terminal shield 52.5 mm **LV432595**
3. Interphase barriers **LV432570**
4. Insulating screen **LV432578**
5. Spreader 52.5 mm **LV432490**
6. Spreader 70 mm **LV432492**
7. Aluminum connector **LV432479** (1 x 35-300 mm²)
8. Aluminum connector **LV432481** (2 x 35-300 mm²)
9. OF, SD, or SDE indication contacts **29450** (standard) / **29452** (for low level)
10. SDTAM thermal fault module **LV429424**
11. UVR or SHT voltage releases **LV42940●/ LV42938●**
12. Direct rotary handle black **GV6AP03** (shipped with the device)
13. Direct rotary handle red on yellow bezel **LV432599**
14. Open door shaft operator **LV426937**
15. Extended rotary handle black **LV432598**
16. Extended rotary handle red on yellow bezel **LV432600**
17. PowerTag M630 wireless energy sensor **LV434022**

Add-on auxiliary contacts - OF contacts

These allow remote indication of the circuit breaker contact states. They can be used for signalling, electrical locking, relaying, etc. They are available in two versions: standard and low level. They include a terminal block and the auxiliary circuits leave the circuit breaker through a hole provided for this purpose.
They perform the following functions, depending on where they are located in the circuit breaker:

Location	Function	Application
1 and/or 4 (GV5) 1 and/or 4, 6, 7 (GV6)	C/O contact	Indicates the position of the circuit breaker poles.
2	Trip indication	Indicates that the circuit breaker has tripped due to an overload, a short-circuit, a differential fault or the operation of a voltage trip (undervoltage or shunt trip), or of the "push to trip" test button. It resets when the circuit breaker is reset.
3	Electrical fault indication	Indicates that the circuit breaker has tripped due to an overload, a short-circuit or a differential fault. It resets when the circuit breaker is reset.
5	Adapter for electrical fault indication	This accessory is mandatory for GV5 to provide electrical fault indication.

Type	Reference
Standard	**29450**
Low level	**29452**
Adapter for electrical fault indication	**LV429451**

Thermal fault module - SDTAM

GV5/ GV6 can be equipped with thermal fault module. This module has:
■ a contact to indicate overload fault in the circuit-breaker
■ a contact to open the contactor. In the event of overload or phase unbalance, this output is activated 400 ms before circuit-breaker tripping to open the contactor and avoid circuit breaker tripping.

Voltage	Reference
24...415 V AC/DC	**LV429424** (1)

Electric trips

These allow the circuit breaker to be tripped via an electrical control signal.
■ Undervoltage release (UVR) - LV42940●
■ Trips the circuit breaker when the control voltage drops below 35 % of its rated voltage.
■ Between 35 % and 70 % of the rated voltage opening is possible but not guaranteed.
■ Above 70 % of the rated voltage, opening does not take place.
■ Continuous duty rated coil.
■ Circuit breaker closing is possible only if the voltage exceeds 85 % of the rated voltage.
■ Shunt trip (SHT) - LV42938●
Trips the circuit breaker when the control voltage rises above 0.7 times the rated voltage.
■ Impulse type ⩾ 20 ms or maintained control signals.
■ Operation (LV42940● or LV42938●)
□ When the circuit breaker has been tripped by an UVR or by a SHT, it must be reset either locally.
□ Tripping has priority over manual closing: if a tripping order is present, manual action does not result in closing, even temporarily, of the contacts.
□ Durability: 50 % of the mechanical durability of the circuit breaker.

Type	Voltage	Reference
Undervoltage trip	220…240 V, 50/60 Hz	**LV429407**
Shunt trip	110…130 V, 50/60 Hz	**LV429386**
	220…240 V, 50/60 Hz	**LV429387**

*(1) **LV429424** takes the place of the UVR/SHT electric trip coil and an auxiliary contact (C/O contact 1).*

Characteristics:
pages B6/144 and B6/145

Schemes:
page B6/152

Cabling accessories

PB120641.eps

LV432479

Cable connectors: The connectors for Frame 5 snap directly on to the device terminals or are secured by clips to right-angle and straight terminal extensions as well as spreaders. Frame 6 connectors are screwed directly to the device terminals.

Spreaders: Spreaders may be used to increase the pitch from 35 mm to 45 mm for Frame 5. The 45 mm pitch can be increased to 52.5 or 70 mm for Frame 6.

PB120642.eps

LV432490

Long terminal shields: They are used for front connection with cables or insulated bars. They comprise two parts assembled with captive screws, forming an IP40 cover. The top part is equipped with sliding grids with break marks for precise adaptation to cables or insulated bars. The rear part completely blocks off the connection zone. Partially cut squares can be removed to adapt to all types of connection for cables with lugs or copper bars. Long terminal shields may be mounted upstream and downstream of the breaker.

Phase barriers: These interphase barriers are used for maximum insulation at the power-connection points.

Insulating screens: Accessories providing insulation at the rear of the device, where they are fitted. Their use is mandatory for devices with spreaders, installed on backplates, when terminal shields are not used.

Frame 5 Combination kits: These kits allow link between the circuit breaker and the contactor. The cover provides protection against direct finger contact. The kit comprises links, a protective shield and a depth adjustable metal bracket for the breaker.

PB120643.eps

LV432593

PB120644.eps

GV7AC04

Description	Application	Sold in lots of	Unit reference GV5	Unit reference GV6
Steel connectors (set of 3)	1.5…95 mm² ≤ 150 A	1	**GV7AC021**	**–**
Aluminium connectors (set of 3)	25…95 mm² ≤ 220 A	1	**LV429227**	
	120…185 mm² ≤ 220 A	1	**GV7AC022**	
	120…240 mm² ≤ 220 A	1	**LV429244**	
	35...300 mm²	1		**LV432479**
	2 x 35...300 mm²	1		**LV432481**
Spreader 3-pole (1)	35…45 mm pole pitch	1	**GV7AC03**	
	52.5 mm pole pitch	1		**LV432490**
	70 mm pole pitch	1		**LV432492**
Long terminal shield (IP40) (1)	35 mm pole pitch	1	**GV7AC01**	
	45 mm pole pitch	1		**LV432593**
	52.5 mm pole pitch	1		**LV432595**
Phase barriers (set of 6)		1	**GV7AC04**	**LV432570**
Insulating screens (set of 2)	45 mm	1	**GV7AC05**	
	70 mm			**LV432578**

Direct rotary handle

PB120640.eps

GV6AP03

The circuit breaker is always supplied direct rotary handle (black handle, black plate) as standard and it provides IP40 protection. The other type handles can be used by replacing this direct rotary handle. It includes a device for locking the circuit breaker in the O (Off) position by means of up to 3 padlocks with a shackle diameter of 5 to 8 mm (padlocks not included). A MCC conversion accessory allows the direct rotary handle to be mounted on the enclosure door. In this case, the door cannot be opened if the circuit breaker is in the “ON” position. Circuit breaker closing is inhibited if the enclosure door is open and prevents the device from being closed if the door is open.

Description	Type	Sold in lots of	Unit reference GV5	Unit reference GV6
Direct rotary handle	Black handle, black legend plate	1	**GV5AP03**	**GV6AP03**
	Red handle, yellow legend plate	1	**GV7AP04**	**LV432599**
MCC conversion accessory	Four mounting direct rotary handle on enclosure door	1	**GV7AP05**	**LV432606**

Extended rotary handle

PB120645.eps

LV432599

Allows to operate a circuit breaker from the front of the switch board, which's installed in the back of an enclosure, which provides IP55 protection. It comprises:

- a unit which is screwed onto the front accessory cover of the circuit breaker,
- an assembly (handle mechanism and front plate) to be fitted on the enclosure door,
- an extension shaft which must be adjusted.
- The distance minimum and maximum distances between the mounting surface and the door are
  - 185...600 mm for Frame 5
  - 209...600 mm for Frame 6

It includes a device for locking the circuit breaker in the O (Off) position by means of up to 3 padlocks with a shackle diameter of 5 to 8 mm (padlocks not included) and disables opening enclosure door.

PB120646.eps

GV7AP02

Description	Type	Sold in lots of	Unit reference GV5	Unit reference GV6
Extended rotary handle	Black handle, black legend plate	1	**GV7AP01**	**LV432598**
	Red handle, yellow legend plate	1	**GV7AP02**	**LV432600**

(1) Terminal shields cannot be used together with spreaders.

Dimensions:
page B6/149

Front extended rotary handles (cont.)

Operation when door is opened
An open door shaft operator can be used to operate the circuit breaker when door is opened. This accessory complies with UL508 A.
The indication of the three positions OFF (**O**), ON (**I**) and tripped (**Trip**) is visible on the circuit breaker.
The circuit breaker itself may be locked in OFF position when the door is opened by 1 padlock / lockout hasp, shackle Ø4-8 mm.

PB121328.eps

LV426937
Open door shaft operator

Description	Reference
Open door shaft operator	**LV426937**
Laser tool	**GVAPL01**

PB106297.eps

GVAPL01 Laser tool

Other accessories

Bag of 6 tamper seals + 6 cover caps (1 large, 5 small) for screw heads	**LV429375**

PB120637.eps

LVA429375
Sealing accessories

PowerTag Measurement module

PB121345.eps

LV434020, LV434022

Wireless-communication module
PowerTag is directly mounted on the bottom side of the circuit breaker.
It provides capability to measure energy, monitor voltage loss, and trigger alarms.
It then delivers useful data to a concentrator for monitoring and diagnosis of the associated circuit breaker.
In addition to monitoring and alarming, PowerTag solution provides a complete knowledge of real time electrical values with a rich and accurate data transfer every 5 seconds.
PowerTag energy sensors can be quickly and easily installed in new or existing panels at any time. Compared to traditional metering solutions, installation time and commissioning are much shorter with no wiring, hence an error proof high density solution and a built-in class 1 accuracy.

Functions
PowerTag energy sensor measures the following values in accordance with the IEC 61557-12 standard:
- ■ Energy (4 quadrants):
  - □ Active energy (Wh): total and partial, delivered and received
  - □ Active energy per phase (Wh): total
  - □ Reactive energy (VARh): partial, delivered and received
- ■ Power:
  - □ Active power (W): total and per phase
  - □ Reactive power (VAR): total
  - □ Apparent power (VA): total
- ■ Voltages (V): phase-to-phase (U12, U23, U31) and phase-to-neutral (V1N, V2N, V3N)
- ■ Currents (A): per phase (I1, I2, I3)
- ■ Frequency
- ■ Power factor
- ■ Voltage loss alarm:
  - □ PowerTag energy sensor sends a "voltage loss" alarm and the current-per-phase value before being de-energized
  - □ At "voltage loss", PowerTag adds an overload alarm if the current is higher than the rated current of the associated protective device.

Note: *functions listed above depend on concentrators/gateways.*

Description	Reference
PowerTag M250 3P: suitable for Frame 5 up to 220 A	**LV434020**
PowerTag M630 3P: suitable for Frame 6 up to 500 A	**LV434022**

Dimensions:
page B6/150

PowerLogic™ Energy measurement solutions

PowerTag Energy

It is a wireless-communication energy sensor dedicated to:
- Energy Management
- Load Monitoring
- Power Availability applications.

It provides a class 1 solution to monitor energy at any level of a distribution panel, from load to main incomer.

Thanks to the wireless communication between PowerTag Energy Sensors and PowerTag Energy Link gateway, the solution can be quickly and easily installed in new or existing panels.

Main features
Real time measurement (saved in the sensors):
- U, V, I (up to 2000 A)
- P, PF and energy values
- Diagnostics, alarming.

PowerTag Energy - Main components

Measurement - PowerTag Energy sensors
Voltages and currents are measured and processed by a sensor:
1. PowerTag Energy Monoconnect: directly mounted on the device terminals, upstream (Acti9, Multi9 only) or downstream (Acti9, Multi9, TeSys Deca - Frame 5, 6 circuit breakers
2. PowerTag Energy Phase Neutral: sensor is crossed by the conductors, voltage pickup connector mounted on device terminals
3. PowerTag Energy Flex: sensor is crossed by the conductors
4. PowerTag Energy Rope: fixed on bar conductors.

Processing and communication – PowerTag Energy Link
The system works with a concentrator or a gateway:
- to collect data from the sensors
- to process data
- to provide additional alarms
- and make them available via Ethernet.

PowerTag Energy Link

1 2 3 1 4

Connection (voltage and current)	Features
Upstream	■ Energy management: consumption in kWh ■ Load monitoring: real-time measurements
Downstream Preferred installation to take full benefit of voltage loss alarming in diagnosing the load	■ Energy management: consumption in kWh ■ Load monitoring: real-time measurements ■ Power availability: voltage loss alarming

Note:
In combination with a contactor, Variable Speed Drive or motor starter: PowerTag Energy can ONLY be installed UPSTREAM of these devices.
Select the PowerTag Energy devices, check the possible mounting positions in the PowerLogic – PowerTag Energy - Selection guide.

Scan or Click to download:

> PowerLogic - PowerTag Energy - Selection guide

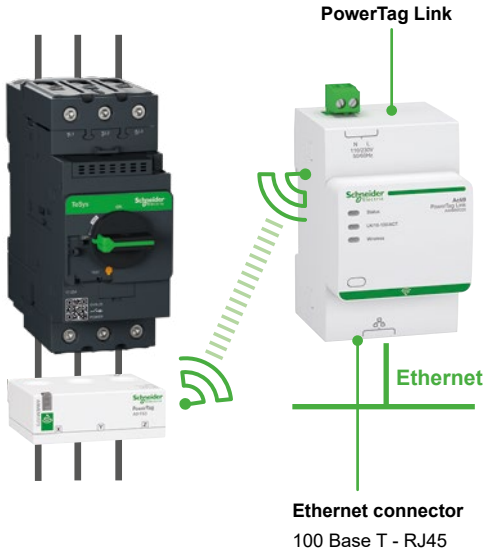

Communication between PowerTag Energy Flex 63 A and PowerTag Link ref. A9XMWD20

Energy measurement – PowerLogic

PowerTag Energy Flex 63 A (F63)

As per IEC 61557-12 PMD-II/DD/K55/1 standard:
with its flex design this PowerTag Energy can be used below a **Deca Motor circuit breakers Frame 2, 3-type (ref. GV2●●●, GV3●●●)** up to 63 A on 3P or 3P + N networks. The voltage picking is done by mean of 3 (3P) or 4 (3P + N) terminals. The shapes for brackets allow to mount and maintain it where needed in a panel.

Main characteristics

PowerTag Energy measures the following values in accordance with the IEC 61557-12 standard PMD-I/DD/K55/1.
Energy:
■ Active energy (kWh): total and partial, delivered and received.
Real-time measurement values:
■ Voltages (V): phase-to-phase and phase-to-neutral
■ Currents (A): per phase.
■ Power:
□ Active power (W): total and per phase
□ Apparent power (VA): total
■ Power factor.
Voltage loss alarms:
■ PowerTag Energy sends a 'voltage loss' alarm and the current-per-phase value before being de-energized
■ At 'voltage loss', PowerTag Energy adds an overload alarm if the current is higher than the rated current of the associated protective device.
Note: *functions listed above depends on Concentrator/Gateway.*

Description	Reference
PowerTag Energy Flex 63 A 3P	**A9MEM1573**
PowerTag Energy Flex 63 A 3P+N	**A9MEM1570**

A9MEM1573 *A9MEM1570*

PowerTag Flex 63 A (terminals are for voltage measurement)

Installation

Neutral picking shall be connected to have phase-to-neutral voltages, energy per phase and power per phase provided.

The existing PowerTag cable ends have been designed for screw terminals for 16 mm².
To adapt PowerTag F63 to the different types of product terminals, it is possible to replace the PowerTag Energy voltage measurement terminals by other cable ends for WG22/0.33 mm² wire.

Scan or Click to download:

> PowerLogic - PowerTag Energy - Selection guide

Motor circuit breakers

Characteristics / Dimensions:
page B6/154

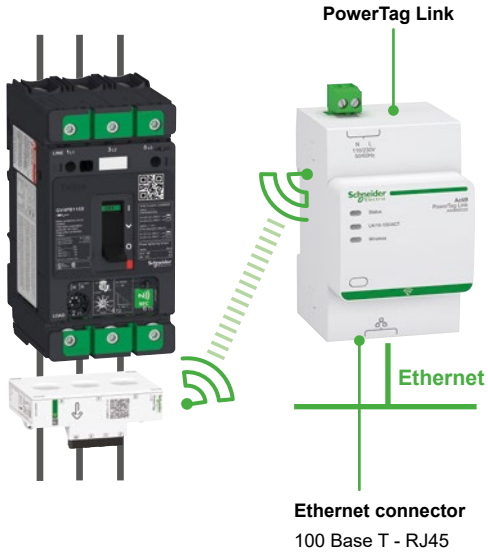

Communication between PowerTag Energy Flex 160 A and PowerTag Link ref. A9XMWD20

PB121658.eps

PowerTag Energy Flex 160 A
Ref. A9MEM1580

Energy measurement – PowerLogic

PowerTag Energy Flex 160 A (F160)

As per IEC 61557-12 PMD-II/DD/K70/1 standard: with its flex design this PowerTag Energy can be used below a **Deca motor circuit breaker Frame 4 - type (ref GV4●●●●)** up to 160 A on 3P or 3P + N networks. Its removable spring connector for voltage picking facilitates its installation, and shapes for brackets allows to mount and maintain it where needed in a panel.

Main characteristics

PowerTag Energy Flex 160 A measures the following values in accordance with the IEC 61557-12 standard PMD-II/DD/K70/1.

■ Energy (4 quadrants):
□ Active energy (kWh): total and partial, delivered and received
□ Active energy per phase (kWh): total and partial, delivered and received
□ Reactive energy (kVARh): total and partial, delivered and received
□ Reactive energy per phase (kVARh): total and partial, delivered and received
□ Apparent energy (kVAh): total and partial
□ Apparent energy per phase (kVAh): total and partial.
■ Real-time measurement values:
□ Voltages (V): phase-to-phase (U12, U23, U31) and phase-to-neutral (V1N, V2N, V3N)
□ Currents (A): per phase (I1, I2, I3), calculated neutral current when connected (IN)
□ Power:
Active power (W): total and per phase
Reactive power (VAR): total and per phase
Apparent power (VA): total and per phase
□ Frequency (Hz).
□ Power factor: total and per phase.
■ Voltage loss alarms:
□ PowerTag Energy Flex sensor sends a 'voltage loss' alarm and the current-per phase value before being de-energized.
□ At 'voltage loss", PowerTag Energy Flex adds an overload alarm if the current is higher than the rated current of the associated protective device.
Note: *functions listed above depends on Concentrator/Gateway.*

Description	Reference
PowerTag Energy Flex 160 A 3P / 3P+N	**A9MEM1580**

Installation

PowerTag Energy Flex 160 A can be installed in a panel directly on cables or busbars, associated to a product or not. Voltage pickings removable spring terminal has to be wired by 1 copper wire per phase with following characteristics:

Wire range

Solid	Stranded	Stranded with terminals ends
0.2...1.5 mm²	0.2...2.5 mm²	0.25...1.5 mm²
24...16 AWG	24...14 AWG	24...16 AWG

If phase-to-neutral voltages, energy per phase and power per phase are needed, then a Neutral picking cable must be connected between the spring-type connector of the PowerTag Energy Flex and a Neutral in the control panel.

PowerTag Energy Flex 160 A is mainly advised for ComPact NSXm, ComPact INS160, Acti9 NG125, Acti9 C120, Power**Pact** B, TeSys Deca - Frame 4 - type circuit breaker, and all other devices with a rating between 63 A and 160 A.

Scan or Click to download:

> PowerLogic - PowerTag Energy - Selection guide

Characteristics / Dimensions:
page B6/155

Life Is On Schneider Electric

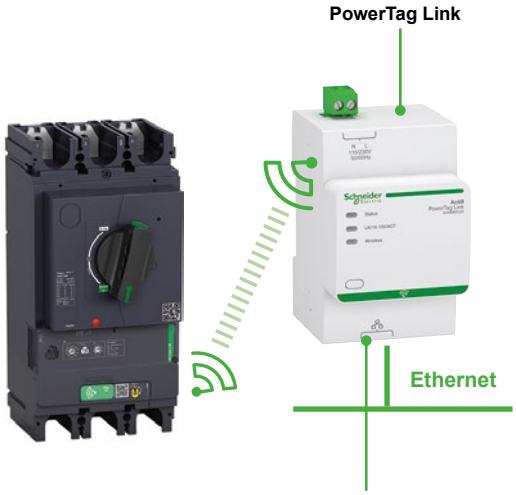

Communication between PowerTag Monoconnect M630 and PowerTag Link ref. A9XMWD20

Energy measurement – PowerLogic

PowerTag Energy Monoconnect 250 A (M250)
PowerTag Energy Monoconnect 630 A (M630)

As per IEC 61557-12 PMD-II/DD/K70/1 standard:
PowerTag Energy Monoconnect is directly mounted on the bottom side of a **TeSys Deca - Frame 4 or 5 circuit breaker**, for 3P and 3P+N electrical networks.
Thanks to its integrated design, it does not require any specific wiring, and is compatible with the same connection accessories than the device it is mounted on. In addition to monitoring and alarming, PowerTag solution provides a complete knowledge of real time electrical values with a rich and accurate data transfer every 5 seconds.
PowerTag Energy sensors can be quickly and easily installed in new or existing panels at any time. Compared to traditional metering solutions, installation time and commissioning are much shorter with no wiring, hence an error proof high density solution and a built-in class 1 accuracy.

Functions

PowerTag Energy sensor measures the following values in accordance with the IEC 61557-12 standard.
■ Energy (4 quadrants):
□ Active energy (kWh): total and partial, delivered and received
□ Active energy per phase (kWh): total
□ Reactive energy (kVARh): partial, delivered and received.
■ Real-time measurement values:
□ Voltages (V): phase-to-phase (U12, U23, U31) and phase-to-neutral (V1N, V2N, V3N)
□ Currents (A): per phase (I1, I2, I3).
■ Power:
□ Active power (W): total and per phase
□ Reactive power (VAR): total
□ Apparent power (VA): total.
■ Frequency (Hz)
■ Power factor
■ Voltage loss alarm:
□ PowerTag Energy sends a "voltage loss" alarm and the current-per-phase value before being de-energized
□ At 'voltage loss', PowerTag adds an overload alarm if the current is higher than the rated current of the associated protective device.
Note: *functions listed above depends on Concentrators/Gateways.*

PB121663.eps

LV434020

PB121661.eps

LV434022

Description	Reference
PowerTag Monoconnect M250 3P: suitable for GV5 up to 220 A	**LV434020**
PowerTag Monoconnect M630 3P: suitable for GV6 up to 500 A	**LV434022**

Installation

The module is self-powered and is installed for fixed devices directly on the bottom side of the circuit breaker or Vigi add-on terminals. For plug-in devices, it has to be installed on the base itself, top or bottom.
PowerTag Energy M250/M630 3P has to be used with 3P devices, and an external neutral voltage tap is provided in case of the installation has a neutral to provide phase-to-neutral voltages, active energy per phase and power per phase.
PowerTag Energy M250/M630 3P + N has to be used with 4P devices and with ComPact INS/INV switches.

In case of retrofit, following points have to been checked:
■ Clearance to be able to add PowerTag Energy module and to respect bending radius of cables.
■ Condition of power connectors: to be replaced if damaged.
■ Tightening torques depending on the connector used.

Scan or Click to download:

> PowerLogic - PowerTag Energy - Selection guide

Characteristics / Dimensions:
page B6/156

Ethernet Connection Concentrator for PowerTag Energy sensors

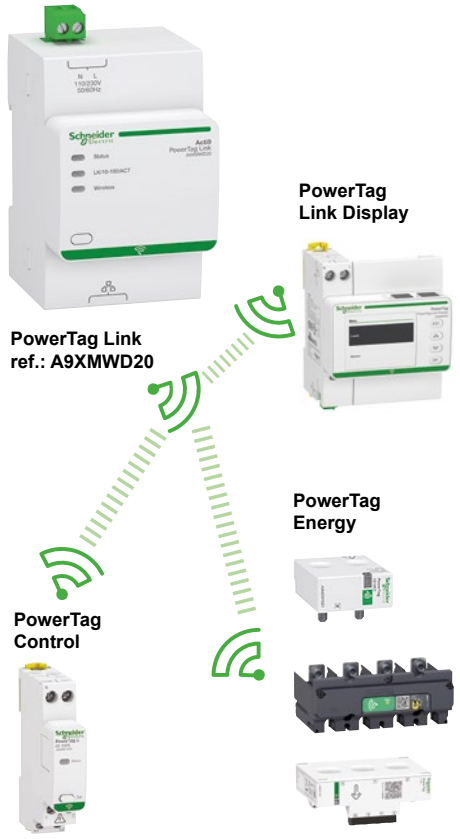

Energy measurement – PowerLogic

PowerTag Link

Ethernet connection concentrator (Modbus TCP/IP) for wireless devices with data display web pages.
The associated PowerTag Energy sensors allow alarms to be managed via email for terminal loads, and energy, power, current and voltage to be measured accurately in real time.
The associated PowerTag Control modules are designed to monitor and control a circuit and notify wirelessly to the concentrator the information status of a contact (OF, SD, CT or TL position indication...).
The associated PowerTag Link Display allows user to visualize data from energy sensors connected to the gateway.
The entire system can easily be installed in existing LV equipments using Multi9/ Acti9/Compact NSX type circuit breakers, TeSys and competitor's devices.

Data transmitted:
- Total and partial energy
- Active, apparent and reactive power, phase-to-phase and phase-to-neutral voltage
- Currents I1, I2, I3
- Power factor (cos φ)
- Voltage loss and overload information
- Control order to a circuit
- Information status of a contact.

Functions

PowerTag Link permits:
- Concentration of PowerTag Energy wireless sensor data
- Ethernet connection via the RJ45 port
- Load monitoring:
  - alarm sent by the energy sensor in the event of a voltage loss,
  - pre-alarms on predefined thresholds (50 %, 80 %) or customized thresholds (thresholds on currents, power, voltages and cumulative energies),
  - load running time counter,
  - power synthesis (kW),
  - Alarm management on current/voltage/load level thresholds by e-mail,
  - Send control orders to PowerTag Control output to operate a load remotely and get load status thanks to feedback loop on associated input,
  - Collect status of contact from PowerTag Control input,
  - Display of alarms and pre-alarms on PowerTag Link embedded web pages,
  - Easy integration into system with Com'X 200, Com'X 510 and other Schneider Electric software and third-party Building Management Systems (BMS) thanks to EcoStruxure Power Commission report in pdf format. This report provides dynamically all the Modbus registers and associated meanings for an easy integration into the system,
  - Remote metering capability using the PowerTag Link monitoring page,
  - Send measured data and alarms to the PowerTag Link Display that can be installed locally.

Description	Reference
PowerTag Link	**A9XMWD20**

Installation

- On DIN rail (width 54 mm).
- 230 V AC power supply.

Testing and start-up

Pairing of wireless devices must be performed via the EcoStruxure Power Commission software, freely available by downloading.
- The software makes it possible, in particular, to attribute to each circuit a name, a use and the current rating (useful for alarms).

Commissioning software: EcoStruxure Power Commission [1]

- Configuration and communication test of wireless devices
- Editing of a complete test report (pdf) with the Modbus communication registers for easy integration into a supervision system
- Windows XP, Windows 7, Windows 8 and Windows 10 compatible
- Downloadable from: https://www.schneider-electric.com/ww/en/download/document/Ecoreach_Installer

(1) new name of Ecoreach software.

Scan or Click to download:

> PowerLogic - PowerTag Energy - Selection guide

Characteristics / Dimensions:
page B6/157

TeSys Modular circuit breakers

0.5 to 20 A

(for equipment and control circuits)

GB2CB20_Image.eps

GB2CB

GB2CD07_Image.eps

GB2CD

GB2DB16_Image.eps

GB2DB

GB2CS05_Image.eps

GB2CS

Introduction

Modular thermal-magnetic circuit breakers protect and isolate the control circuits of industrial equipment with contactor coils, transformers….
They protect and isolate single-phase auxiliary circuits such as solenoid valves, electro-brakes, battery chargers, supplied from the control circuit voltage.

Ref. GB2CB, GB2CD, GB2DB

12 ratings are available, from 0.5 to 20 A, in single-pole (GB2CB), single-pole + neutral (GB2CD) and 2-pole (GB2DB) versions.
They have a magnetic tripping threshold set at between 12 and 16 In to withstand the current peaks generated by many industrial components.

Ref. GB2CS

2 ratings are available, 0.5 and 1 A, in single-pole version.
The magnetic tripping threshold is set between 5 and 7 In.

Functions, installation

Clip-on fixing onto all types of 35 mm ⊥⊥ rails, on ⊏⊐ rails and on Telequick mounting plates.
Upstream and downstream marking by means of AB1 clip-in markers.
Clear indication of “I” and “O” positions on the operator.
Tamper-proof device which requires no special maintenance (fixed magnetic and thermal tripping thresholds).

Selection for the protection of circuits supplied by transformers

Single-phase transformers.
Magnetising peak: 20 In.
Operation of magnetic trips: 13 In.

Power	Primary (1)		Secondary			
VA	**220/240 V**	**380/415 V**	**24 V**	**48 V**	**110 V**	**220 V**
40	GB2DB05	GB2DB05	GB2CD07	GB2CD06	GB2CD05	GB2CD05
63	GB2DB05	GB2DB05	GB2CD08	GB2CD07	GB2CD06	GB2CD05
100	GB2DB06	GB2DB05	GB2CD10	GB2CD07	GB2CD06	GB2CD05
160	GB2DB07	GB2DB06	GB2CD14	GB2CD09	GB2CD07	GB2CD06
250	GB2DB07	GB2DB06	GB2CD16	GB2CD12	GB2CD08	GB2CD07
400	GB2DB08	–	–	GB2CD14	GB2CD09	GB2CD07
630	GB2DB10	GB2DB08	–	GB2CD21	GB2CD12	GB2CD08
1000	GB2DB14	GB2DB09	–	–	GB2CD16	GB2CD10
1600	GB2DB20	GB2DB14	–	–	–	GB2CD14
2000	GB2DB21	GB2DB14	–	–	–	GB2CD16
2500	–	GB2DB20	–	–	–	GB2CD20
3000	–	GB2DB20	–	–	–	GB2CD21
4000	–	GB2DB21	–	–	–	–

*(1) If the breaking capacity of the **GB2** is insufficient, use a **GV2RT** with 2 poles connected in series.*

Product references

GB2CB20_Image.eps

GB2CB●●

Circuit breakers with magnetic tripping threshold: 12 to 16 In

Single-pole

Conventional rated thermal current Ith [1]	Magnetic tripping current Id ± 20 %	Sold in lots of	Unit reference
A	A		
0.5	6.6	6	**GB2CB05**
1	14	6	**GB2CB06**
2	26	6	**GB2CB07**
3	40	6	**GB2CB08**
4	52	6	**GB2CB09**
5	66	6	**GB2CB10**
6	83	6	**GB2CB12**
8	108	6	**GB2CB14**
10	138	6	**GB2CB16**
12	165	6	**GB2CB20**
16	220	6	**GB2CB21**

GB2CD07_Image.eps

GB2CD●●

Single-pole + neutral

Conventional rated thermal current Ith [1]	Magnetic tripping current Id ± 20 %	Sold in lots of	Unit reference
A	A		
0.5	6.6	6	**GB2CD05**
1	14	6	**GB2CD06**
2	26	6	**GB2CD07**
3	40	6	**GB2CD08**
4	52	6	**GB2CD09**
5	66	6	**GB2CD10**
6	83	6	**GB2CD12**
8	108	6	**GB2CD14**
10	138	6	**GB2CD16**
12	165	6	**GB2CD20**
16	220	6	**GB2CD21**

GB2DB16_Image.eps

GB2DB●●

2-pole

Conventional rated thermal current Ith [1]	Magnetic tripping current Id ± 20 %	Sold in lots of	Unit reference
A	A		
0.5	6.6	3	**GB2DB05**
1	14	3	**GB2DB06**
2	26	3	**GB2DB07**
3	40	3	**GB2DB08**
4	50	3	**GB2DB09**
5	66	3	**GB2DB10**
6	83	3	**GB2DB12**
8	108	3	**GB2DB14**
10	138	3	**GB2DB16**
12	165	3	**GB2DB20**
16	220	3	**GB2DB21**

(1) Conforming to IEC 60947-1.

Characteristics:
pages B6/160 to B6/162

Dimensions, schemes:
page B6/163

Product references

Circuit breakers with magnetic tripping threshold: 5 to 7 In

GB2CS05_Image.eps

GB2CS●●

Single-pole

Conventional rated thermal current Ith [1]	Magnetic tripping current Id ± 20 %	Sold in lots of	Unit reference
A	A		
0.5	3.3	6	**GB2CS05**
1	6	6	**GB2CS06**

(1) Conforming to IEC 60947-1.

Accessories for circuit breakers ref. GB2-CB, DB and CS

PB121347.eps

GB2G210

Description	Sold in lots of	Unit reference
Busbar set for supply to 10 GB2 DB or 20 GB2CB or GB2CS with 2 connectors	1	**GB2G210**

Characteristics:
pages B6/160 to B6/162

Dimensions, schemes:
page B6/163

Life Is On Schneider Electric

Product references

29450	GV2L32	GV2P01	GV3PC02
29452	GV2LE03	GV2P02	GV4ADM1111
GB2CB05	GV2LE04	GV2P03	GV4ADN01
GB2CB06	GV2LE05	GV2P04	GV4ADN02
GB2CB07	GV2LE06	GV2P05	GV4AE11
GB2CB08	GV2LE07	GV2P06	GV4APN01
GB2CB09	GV2LE08	GV2P07	GV4APN02
GB2CB10	GV2LE10	GV2P08	GV4APN04
GB2CB12	GV2LE14	GV2P10	GV4AS027
GB2CB14	GV2LE16	GV2P14	GV4AS057
GB2CB16	GV2LE20	GV2P16	GV4AS137
GB2CB20	GV2LE22	GV2P20	GV4AS287
GB2CB21	GV2LE32	GV2P21	GV4AS487
GB2CD05	GV2ME01	GV2P22	GV4AU027
GB2CD06	GV2ME013	GV2P32	GV4AU057
GB2CD07	GV2ME016	GV2PC01	GV4AU137
GB2CD08	GV2ME01AP	GV2PC02	GV4AU247
GB2CD09	GV2ME02	GV2RT03	GV4AU286
GB2CD10	GV2ME023	GV2RT04	GV4AU415
GB2CD12	GV2ME02AP	GV2RT05	GV4AU486
GB2CD14	GV2ME03	GV2RT053	GV4G66
GB2CD16	GV2ME033	GV2RT06	GV4L02N
GB2CD20	GV2ME036	GV2RT07	GV4L02N6
GB2CD21	GV2ME03AP	GV2RT073	GV4L03N
GB2CS05	GV2ME04	GV2RT08	GV4L03N6
GB2CS06	GV2ME043	GV2RT10	GV4L07N
GB2DB05	GV2ME046	GV2RT14	GV4L07N6
GB2DB06	GV2ME04AP	GV2RT16	GV4L115B
GB2DB07	GV2ME05	GV2RT20	GV4L115B6
GB2DB08	GV2ME053	GV2RT21	GV4L115N
GB2DB09	GV2ME056	GV2SN14	GV4L115N6
GB2DB10	GV2ME05AP	GV2SN15	GV4L115S
GB2DB12	GV2ME06	GV2SN17	GV4L12N
GB2DB14	GV2ME063	GV2SN35	GV4L12N6
GB2DB16	GV2ME066	GV2SN37	GV4L25B
GB2DB20	GV2ME06AP	GV2V03	GV4L25B6
GB2DB21	GV2ME07	GV3A02	GV4L25N
GB2G210	GV2ME073	GV3A03	GV4L25N6
GK2AF01	GV2ME076	GV3A08	GV4L50B
GK2AX50	GV2ME07AP	GV3A09	GV4L50B6
GV1F03	GV2ME08	GV3APK01	GV4L50N
GV1G02	GV2ME083	GV3APN01	GV4L50N6
GV1L3	GV2ME086	GV3D22	GV4L80B
GV1V02	GV2ME08AP	GV3G66	GV4L80B6
GV2AF01	GV2ME10	GV3L25	GV4L80N
GV2AF02	GV2ME103	GV3L32	GV4L80N6
GV2AF3	GV2ME106	GV3L326	GV4L80S
GV2AF4	GV2ME10AP	GV3L40	GV4LE02N
GV2AF5	GV2ME14	GV3L50	GV4LE02N6
GV2AK00	GV2ME143	GV3L65	GV4LE02S
GV2AP01	GV2ME146	GV3L73	GV4LE02S6
GV2AP02	GV2ME14AP	GV3L80	GV4LE03N
GV2AP03	GV2ME16	GV3P13	GV4LE03N6
GV2AP04	GV2ME163	GV3P18	GV4LE03S
GV2APK01	GV2ME166	GV3P25	GV4LE03S6
GV2APN01	GV2ME16AP	GV3P256	GV4LE07N
GV2APN02	GV2ME20	GV3P32	GV4LE07N6
GV2APN03	GV2ME203	GV3P321	GV4LE07S
GV2APN04	GV2ME206	GV3P40	GV4LE07S6
GV2CP21	GV2ME20AP	GV3P401	GV4LE115B
GV2GH7	GV2ME21	GV3P406	GV4LE115B6
GV2L03	GV2ME213	GV3P50	GV4LE115N
GV2L04	GV2ME216	GV3P501	GV4LE115N6
GV2L05	GV2ME21AP	GV3P506	GV4LE115S
GV2L06	GV2ME22	GV3P65	GV4LE115S6
GV2L07	GV2ME223	GV3P651	GV4LE12N
GV2L08	GV2ME226	GV3P656	GV4LE12N6
GV2L10	GV2ME22AP	GV3P73	GV4LE12S
GV2L14	GV2ME32	GV3P731	GV4LE12S6
GV2L16	GV2ME323S	GV3P736	GV4LE25B
GV2L20	GV2ME326	GV3P80	GV4LE25B6
GV2L22	GV2ME32AP	GV3PC01	GV4LE25N

This document is current. Click on the product reference to get the most recent availability status (hyperlink to **se.com** product datasheet).
If your product variant is no longer available, please consult your distributor or regional sales office.

GV4LE25N6	GV4PB50S	GV4PEM115N	GVAED0113
GV4LE25S	GV4PB80B	GV4PEM115N6	GVAED101
GV4LE25S6	GV4PB80N	GV4PEM115S	GVAED1013
GV4LE50B	GV4PB80S	GV4PEM115S6	GVAM11
GV4LE50B6	GV4PE02N	GV4PEM12N	GVAN11
GV4LE50N	GV4PE02N6	GV4PEM12N6	GVAN113
GV4LE50N6	GV4PE02S	GV4PEM12S	GVAN20
GV4LE50S	GV4PE02S6	GV4PEM12S6	GVAN203
GV4LE50S6	GV4PE03N	GV4PEM25B	GVAPA2
GV4LE80B	GV4PE03N6	GV4PEM25B6	GVAPBPHP
GV4LE80B6	GV4PE03S	GV4PEM25N	GVAPH02
GV4LE80N	GV4PE03S6	GV4PEM25N6	GVAPK11
GV4LE80N6	GV4PE07N	GV4PEM25S	GVAPYPHP
GV4LE80S	GV4PE07N6	GV4PEM25S6	GVAS025
GV4LE80S6	GV4PE07S	GV4PEM50B	GVAS026
GV4LUG	GV4PE07S6	GV4PEM50B6	GVAS055
GV4P02N	GV4PE115B	GV4PEM50N	GVAS115
GV4P02N6	GV4PE115B6	GV4PEM50N6	GVAS116
GV4P03N	GV4PE115N	GV4PEM50S	GVAS207
GV4P03N6	GV4PE115N6	GV4PEM50S6	GVAS225
GV4P07N	GV4PE115S	GV4PEM80B	GVAS226
GV4P07N6	GV4PE115S6	GV4PEM80B6	GVAS385
GV4P115B	GV4PE12N	GV4PEM80N	GVAS415
GV4P115B6	GV4PE12N6	GV4PEM80N6	GVAU025
GV4P115N	GV4PE12S	GV4PEM80S	GVAU055
GV4P115N6	GV4PE12S6	GV4PEM80S6	GVAU115
GV4P115S	GV4PE25B	GV5AP03	GVAU116
GV4P12N	GV4PE25B6	GV5P150F	GVAU125
GV4P12N6	GV4PE25N	GV5P150H	GVAU207
GV4P25B	GV4PE25N6	GV5P220F	GVAU225
GV4P25B6	GV4PE25S	GV5P220H	GVAU226
GV4P25N	GV4PE25S6	GV6AP03	GVAU385
GV4P25N6	GV4PE50B	GV6P320F	GVAU386
GV4P50B	GV4PE50B6	GV6P320H	GVAU415
GV4P50B6	GV4PE50N	GV6P500F	GVAU416
GV4P50N	GV4PE50N6	GV6P500H	GVAU505
GV4P50N6	GV4PE50S	GV7AC01	GVAX115
GV4P80B	GV4PE50S6	GV7AC021	GVAX116
GV4P80B6	GV4PE80B	GV7AC022	GVAX225
GV4P80N	GV4PE80B6	GV7AC03	GVAX226
GV4P80N6	GV4PE80N	GV7AC04	GVAX385
GV4P80S	GV4PE80N6	GV7AC05	GVAX386
GV4PB02N	GV4PE80S	GV7AC06	GVAX415
GV4PB02S	GV4PE80S6	GV7AC08	LA9E07
GV4PB03N	GV4PEM02N	GV7AP01	LAD311
GV4PB03S	GV4PEM02N6	GV7AP02	LAD96590
GV4PB07N	GV4PEM02S	GV7AP04	LAD96595
GV4PB07S	GV4PEM02S6	GV7AP05	LV429385
GV4PB115B	GV4PEM03N	GVAD0101	LV429386
GV4PB115N	GV4PEM03N6	GVAD0110	LV429387
GV4PB115S	GV4PEM03S	GVAD1001	LV429388
GV4PB12N	GV4PEM03S6	GVAD1010	LV429405
GV4PB12S	GV4PEM07N	GVAE1	LV429406
GV4PB25B	GV4PEM07N6	GVAE11	LV429407
GV4PB25N	GV4PEM07S	GVAE113	LV429408
GV4PB25S	GV4PEM07S6	GVAE20	
GV4PB50B	GV4PEM115B	GVAE203	
GV4PB50N	GV4PEM115B6	GVAED011	

This document is current. Click on the product reference to get the most recent availability status (hyperlink to **se.com** product datasheet).
If your product variant is no longer available, please consult your distributor or regional sales office.

Technical Data for Designers

Deca - Frame 2:
> characteristics .....B6/72 to B6/76
> curves .....B6/77 to B6/86
> characteristics - accessories .....B6/87 to B6/89
> dimensions, schemes .....B6/90 to B6/99

Deca - Frame 3:
> characteristics .....B6/102 to B6/105
> curves .....B6/106 to B6/111
> characteristics - accessories .....B6/112 to B6/114
> dimensions, schemes .....B6/115 to B6/117

Deca - Frame 4:
> characteristics .....B6/120 to B6/123
> curves .....B6/124 to B6/131
> characteristics - accessories .....B6/132 to B6/133
> dimensions, schemes .....B6/134 to B6/137

Giga - Frame 5 - Frame 6:
> characteristics B6/140
> curves .....B6/141 to B6/143
> characteristics - accessories .....B6/144 to B6/145
> dimensions, schemes .....B6/146 to B6/152

PowerTag Energy sensors:
> PowerTag Energy Flex 63 A B6/154
> PowerTag Energy Flex 160 A B6/155
> PowerTag Energy Monoconnect 250 A B6/156
> PowerTag Energy Link B6/157

Modular:
> characteristics .....B6/160 to B6/162
> dimensions, schemes B6/163

Life Is On Schneider Electric

TeSys Deca - Frame 2

0.06 to 15 kW

Environment

Circuit breaker type				GV2L	GV2LE	GV2ME	GV2P	GV2RT
Conforming to standards				IEC/EN 60947-4-1, IEC/EN 60947-2				
				CSA C22.2 n°60947-4-1 (1), UL 60947-4-1				
Product certifications				CCC, EAC, BV, LROS, DNV-GL, RINA, UL (1), CSA, UKCA	CCC, EAC, BV, RINA, UL (1), UKCA	CCC, UL, CSA, EAC, ATEX, BV, LROS, UKCA, DNV-GL, RINA	CCC, UL, CSA, EAC, ATEX, BV, LROS, DNV-GL, RINA, UKCA	CCC, UL, CSA, EAC, BV, LROS, UKCA
Climatic withstand				According to IACS E10				
Degree of protection (front face)	Conforming to IEC 60529	Open mounted		Against direct finger contact: IP20				
		In enclosure		IP65 with GV2PC01 GV2PC02 enclosure	-	IP41 with GV2M●01 IP55 with GV2M●02 enclosure	IP 65 with GV2PC01 GV2PC02 enclosure	-
Shock resistance	Conforming to IEC 60068-2-27			30 gn - 11 ms				
Vibration resistance	Conforming to IEC 60068-2-6			5 gn (5 to 150 Hz)				
Ambient air temperature	Storage		°C	-40…+80				
	Operation	Open mounted	°C	-20…+60				
		In enclosure	°C	-20…+40				
Temperature compensation		Open mounted	°C	-20…+60				
		In enclosure	°C	-20…+40				
Flame resistance	Conforming to IEC 60695-2-11		°C	960				
Maximum operating altitude			m	2000				
Suitable for isolation	Conforming to IEC 60947-1 § 8.1.7			Yes				
Resistance to mechanical impact			J	0.5				
				IK04				
Sensitivity to phase failure				Yes, conforming to IEC 60947-4-1 § 8-2-1-5-2 for GV2ME & GV2P				

Technical characteristics

Circuit breaker type			GV2L	GV2LE	GV2ME	GV2P	GV2RT
Utilisation category	Conforming to IEC 60947-2		A				
	Conforming to IEC 60947-4-1		AC3/AC-3e				
Rated operational voltage (Ue)	Conforming to IEC 60947-2	V	690				
Rated insulation voltage (Ui)	Conforming to IEC 60947-2	V	690				
Rated voltage	Conforming to UL 60947-4-1	V	-	-	600	600	600
	CSA C 22.2 n° 60947-4-1		480	480	600	600	600
Rated operational frequency	Conforming to IEC 60947-4-1 UL, CSA	Hz	50/60				
Rated impulse withstand voltage (U imp)	Conforming to IEC 60947-2	kV	6				
Total power dissipated per pole		W	1.8		2.5		
Mechanical durability (C.O.: Closing, Opening)		C.O.	100 000				
Electrical durability for AC-3e/415V duty (C.O.: Closing, Opening)	415 V In	C.O.	100 000				
Duty class (maximum operating rate)		C.O./h	40		25		
Maximum conventional rated thermal current (Ith)	Conforming to IEC 60947-4-1	A	0.4...32	0.4...32	0.16...32	0.16...32	0.40...23
Rated duty	Conforming to IEC 60947-4-1		Continuous duty				

*(1) **GV2L03** to **GV2L22**, **GV2LE03** to **GV2LE22**.*
*(2) UL 60947-4-1 type E for **GV2P●●** (except 32 A).*

Ref.
Motor circuit breakers

Mounting characteristics

Operating position
Without derating, in relation to normal vertical mounting plane [1]

DF510520.eps

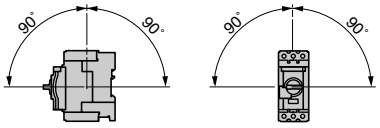

Products side by side

Dx432868.eps

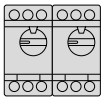

When several products **GV2ME●●**, **GV2P●●**, **GV2RT●●** are mounted side by side, the thermal trip setting Ir maybe need to be adjusted up to 1.1xIn.

Do not exceed the maximum thermal setting Ir.
E.g: **GV2ME14**, thermal setting range: 6...10, do not adjust Ir above 10 A.

Connection characteristics

Connection to screw clamp terminals or spring terminals

Bare cables

DF510554.eps

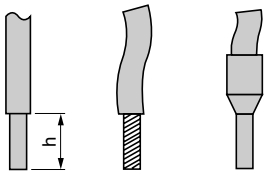

Circuit breaker type			GV2L		GV2LE		GV2ME		GV2P		GV2RT	
			Min.	Max.	Min.	Max.	Min.	Max.	Min.	Max.	Min.	Max.
Connection to screw clamp terminals (Max. number of conductors x c.s.a.)	Solid cable	mm²	2 x 1	2 x 6	2 x 1	2 x 6	2 x 1	2 x 6	2 x 1	2 x 6	2 x 1	2 x 6
	Flexible cable without cable end	mm²	2 x 1.5	2 x 6	2 x 1.5	2 x 6	2 x 1.5	2 x 6	2 x 1.5	2 x 6	2 x 1.5	2 x 6
	Flexible cable with cable end	mm²	2 x 1	2 x 4	2 x 1	2 x 4	2 x 1	2 x 4	2 x 1	2 x 4	2 x 1	2 x 4
Tightening torque		N.m	1.7									
Connection to spring terminals (Max. number of conductors x c.s.a.)	Solid cable	mm²	–	–	–	–	2 x 1 [2]	2 x 6	–	–	–	–
	Flexible cable without cable end	mm²	–	–	–	–	2 x 1.5 [2]	2 x 4	–	–	–	–

Connection by bars or lugs

Bars or lugs

DF534046.eps

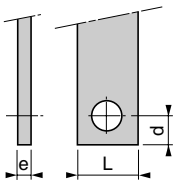

DF534047.eps

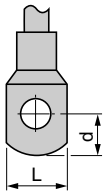

DF510615.eps

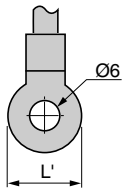

Circuit breaker type			GV2ME●●6
Pitch	Without spreaders	mm	13.5
	With spreaders	mm	–
Bars or cables with lugs	e	mm	≤ 6
	L	mm	≤ 9.5
	L'	mm	≤ 9.5
	d	mm	≤ 10
Screws			M4
	Tightening torque	N.m	1.7
Bare cables (copper or aluminium) with connectors	Height (h)	mm	–
	C.s.a.	mm²	–
	Tightening torque	N.m	–

(1) When mounting on a vertical rail, fit a stop to prevent any slippage.
*(2) For cross-sections 1 to 1.5 mm², the use of an **LA9D99** cable end reducer is recommended.*

Ref.
Motor circuit breakers

Characteristics

Breaking capacity of GV2L and GV2LE

Circuit breaker type				GV2LE									GV2L								
				03 to 06	07	08	10	14	16	20	22	32	03 to 05	06 & 07	08	10	14	16	20	22	32
Rating			A	0.4 to 1.6	2.5	4	6.3	10	14	18	25	32	0.4 to 1	1.6 to 2.5	4	6.3	10	14	18	25	32
Breaking capacity conforming to IEC 60947-2	230/240 V	Icu	kA	★	★	★	★	★	★	★	50	50	★	★	★	★	★	★	★	50	50
		Ics % (1)		★	★	★	★	★	★	★	100	100	★	★	★	★	★	★	★	100	100
	400/415 V	Icu	kA	★	★	★	★	★	15	15	15	10	★	★	★	★	★	50	50	50	50
		Ics % (1)		★	★	★	★	★	50	50	40	50	★	★	★	★	★	50	50	50	50
	440 V	Icu	kA	★	★	★	50	15	8	8	6	6	★	★	★	★	20	20	20	20	20
		Ics % (1)		★	★	★	100	100	50	50	50	50	★	★	★	★	75	75	75	75	75
	500 V	Icu	kA	★	★	★	50	10	6	6	4	4	★	★	★	★	10	10	10	10	10
		Ics % (1)		★	★	★	100	100	75	75	75	75	★	★	★	★	100	75	75	75	75
	690 V	Icu	kA	★	3	3	3	3	3	3	3	3	★	4	4	4	4	4	4	4	4
		Ics % (1)		★	75	75	75	75	75	75	75	75	★	100	100	100	100	100	100	100	100
Associated fuses (if required) if Isc > breaking capacity Icu conforming to IEC 60947-2 amendment 1	230/240 V	aM	A	★	★	★	★	★	★	★	80	80	★	★	★	★	★	★	★	100	100
		gG	A	★	★	★	★	★	★	★	100	100	★	★	★	★	★	★	★	125	125
	400/415 V	aM	A	★	★	★	★	★	63	63	80	80	★	★	★	★	★	80	100	100	100
		gG	A	★	★	★	★	★	80	80	100	100	★	★	★	★	★	100	125	125	125
	440 V	aM	A	★	★	★	50	50	50	50	63	63	★	★	★	★	50	63	80	80	80
		gG	A	★	★	★	63	63	63	63	80	80	★	★	★	★	63	80	100	100	100
	500 V	aM	A	★	★	★	50	50	50	50	50	50	★	★	★	★	50	50	50	50	50
		gG	A	★	★	★	63	63	63	63	63	63	★	★	★	★	63	63	63	63	63
	690 V	aM	A	★	16	25	32	32	40	40	40	40	★	20	25	40	40	50	50	50	50
		gG	A	★	20	32	40	40	50	50	50	50	★	25	32	50	50	63	63	63	63
Cable protection against thermal stress in the event of short-circuit (PVC insulated copper cables) Minimum c.s.a. protected at 40 °C and at Isc max.	1 mm²		kA	●	●	●	≤10	≤ 6	(2)	(2)	(2)	(2)	●	●	●	≤10	≤ 6	(2)	(2)	(2)	(2)
	1.5 mm²		kA	●	●	●	≤20	≤10	(2)	(2)	(2)	(2)	●	●	●	≤20	≤10	(2)	(2)	(2)	(2)
	2.5 mm²			●	●	●	●	●	●	●	●	(2)	●	●	●	●	●	●	●	●	(2)
	4…6 mm²			●	●	●	●	●	●	●	●	●	●	●	●	●	●	●	●	●	●

★ > 100 kA.
● Cable c.s.a. protected.
(1) As % of Icu.
(2) Cable c.s.a. not protected.

Ref.
Motor circuit breakers

Breaking capacity of GV2ME, GV2RT and GV2P

Circuit breaker type				GV2ME and GV2RT									GV2P								
				01 to 06	07	08	10	14	16	20	21 & 22	32	01 to 06	07	08	10	14	16	20	21 & 22	32
Rating			A	0.1 to 1.6	2.5	4	6.3	10	14	18	23 & 25	32	0.1 to 1.6	2.5	4	6.3	10	14	18	23 & 25	32
Breaking capacity conforming to IEC 60947-2	230/240 V	Icu	kA	★	★	★	★	★	★	★	50	50	★	★	★	★	★	★	★	★	★
		Ics % (1)		★	★	★	★	★	★	★	100	100	★	★	★	★	★	★	★	★	★
	400/415 V	Icu	kA	★	★	★	★	★	15	15	15	10	★	★	★	★	★	★	50	50	50
		Ics % (1)		★	★	★	★	★	50	50	40	50	★	★	★	★	★	★	50	50	50
	440 V	Icu	kA	★	★	★	50	15	8	8	6	6	★	★	★	★	★	50	20	20	20
		Ics % (1)		★	★	★	100	100	50	50	50	50	★	★	★	★	★	75	75	75	75
	500 V	Icu	kA	★	★	★	50	10	6	6	4	4	★	★	★	★	50	42	10	10	10
		Ics % (1)		★	★	★	100	100	75	75	75	75	★	★	★	★	100	75	75	75	75
	690 V	Icu	kA	★	3	3	3	3	3	3	3	3	★	8	8	6	6	6	4	4	4
		Ics % (1)		★	75	75	75	75	75	75	75	75	★	100	100	100	100	100	100	100	100
Associated fuses (if required) if Isc > breaking capacity Icu conforming to IEC 60947-2	230/240 V	aM	A	★	★	★	★	★	★	★	80	80	★	★	★	★	★	★	★	★	★
		gG	A	★	★	★	★	★	★	★	100	100	★	★	★	★	★	★	★	★	★
	400/415 V	aM	A	★	★	★	★	★	63	63	80	80	★	★	★	★	★	★	100	100	100
		gG	A	★	★	★	★	★	80	80	100	100	★	★	★	★	★	★	125	125	125
	440 V	aM	A	★	★	★	50	50	50	50	63	63	★	★	★	★	★	50	63	80	80
		gG	A	★	★	★	63	63	63	63	80	80	★	★	★	★	★	63	80	100	100
	500 V	aM	A	★	★	★	50	50	50	50	50	50	★	★	★	★	50	50	50	50	50
		gG	A	★	★	★	63	63	63	63	63	63	★	★	★	★	63	63	63	63	63
	690 V	aM	A	★	16	25	32	32	40	40	40	40	★	20	25	40	40	50	50	50	50
		gG	A	★	20	32	40	40	50	50	50	50	★	25	32	50	50	63	63	63	63

★ > 100 kA.
(1) As % of Icu.

Ref.
Motor circuit breakers

References:
pages B6/14 to B6/18
Curves:
pages B6/83 to B6/86
Dimensions:
pages B6/93 to B6/98

Characteristics

Breaking capacity of GV2ME, GV2RT and GV2P (used in association with current limiter GV1L3)

Circuit breaker type				GV2ME and GV2RT									
				01 to 06	07	08	10	14	16	20	21	22	32
Rating			A	0.1 to 1.6	2.5	4	6.3	10	14	18	23	25	32
Breaking capacity conforming to IEC 60947-2	230/240 V	Icu	kA	★	★	★	★	★	★	★	★	★	★
		Ics % (1)		★	★	★	★	★	★	★	★	★	★
	400/415 V	Icu	kA	★	★	★	★	★	100	100	100	100	100
		Ics % (1)		★	★	★	★	★	50	50	40	40	40
	440 V	Icu	kA	★	★	★	★	★	50	20	20	20	20
		Ics % (1)		★	★	★	★	★	75	75	75	75	75
	500 V	Icu	kA	★	★	★	★	50	42	10	10	10	10
		Ics % (1)		★	★	★	★	100	100	75	75	75	75

Circuit breaker type				GV2P									
				01 to 06	07	08	10	14	16	20	21	22	32
Rating			A	0.1 to 1.6	2.5	4	6.3	10	14	18	23	25	32
Breaking capacity conforming to IEC 60947-2	230/240 V	Icu	kA	★	★	★	★	★	★	★	★	★	★
		Ics % (1)		★	★	★	★	★	★	★	★	★	★
	400/415 V	Icu	kA	★	★	★	★	★	★	★	★	★	★
		Ics % (1)		★	★	★	★	★	★	★	★	★	★
	440 V	Icu	kA	★	★	★	★	★	100	100	100	100	100
		Ics % (1)		★	★	★	★	★	50	50	50	50	50
	500 V	Icu	kA	★	★	★	★	100	100	100	100	100	100
		Ics % (1)		★	★	★	★	50	50	50	50	50	50
	690 V (3)	Icu = Ics	kA	★	50	50	50	50	50	50	50	50	50

Circuit breaker type				GV2ME									
				01 to 06	07	08	10	14	16	20	21	22	32
Rating			A	0.1 to 1.6	2.5	4	6.3	10	14	18	23	25	32
Cable protection against thermal stress in the event of short-circuit (PVC insulated copper cables)	Minimum c.s.a. protected at 40 °C at Isc max.	1 mm²		●	●	●	≤ 10 kA	≤ 6 kA	(2)	(2)	(2)	(2)	(2)
		1.5 mm²		●	●	●	≤ 20 kA	≤ 10 kA	(2)	(2)	(2)	(2)	(2)
		2.5 mm²		●	●	●	●	●	●	●	●	●	(2)
		4…6 mm²		●	●	●	●	●	●	●	●	●	●

★ > 100 kA.
● Cable c.s.a. protected.
(1) As % of Icu.
(2) Cable c.s.a. not protected.
*(3) With limiter **LA9LB920**.*

Ref.
Motor circuit breakers

Curves

Tripping curves for GV2L or LE combined with thermal overload relay LRD or LR2K

Average operating times at 20 °C related to multiples of the setting current

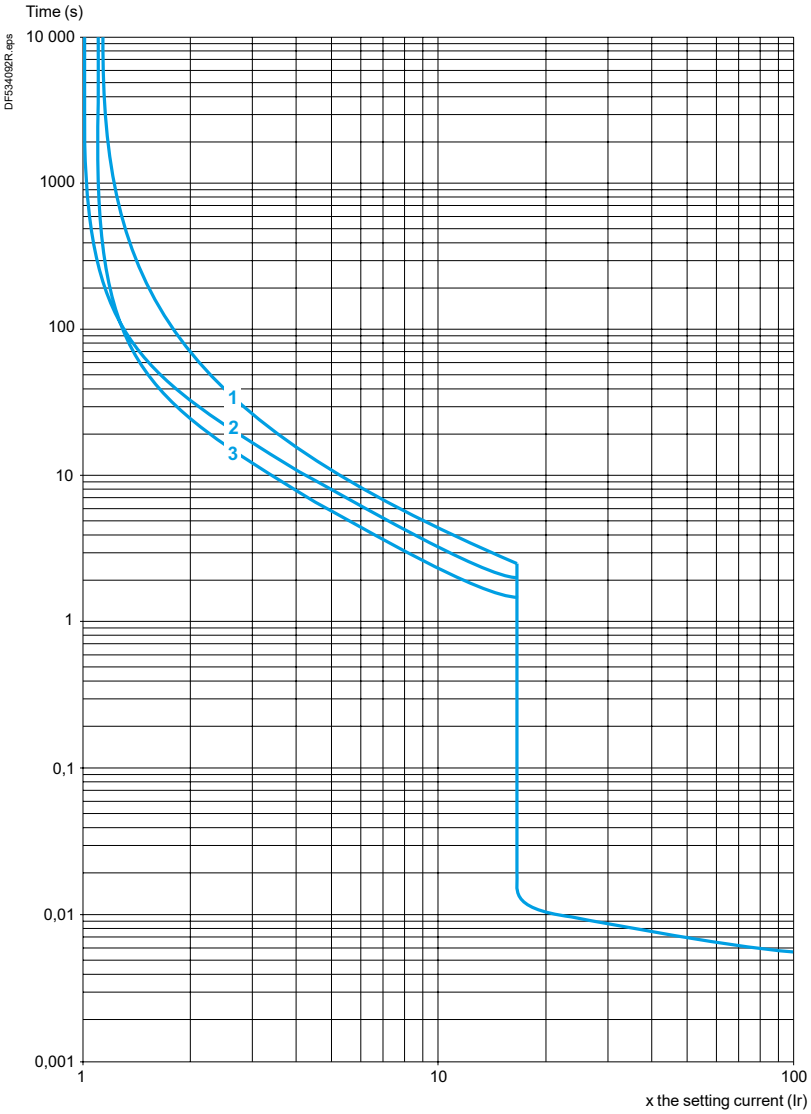

1 3 poles from cold state
2 2 poles from cold state
3 3 poles from hot state

Ref.
Motor circuit breakers

Current limitation on short-circuit for GV2L and GV2LE only (3-phase 400/415 V)

Dynamic stress

I peak = f (prospective Isc) at 1.05 Ue = 435 V

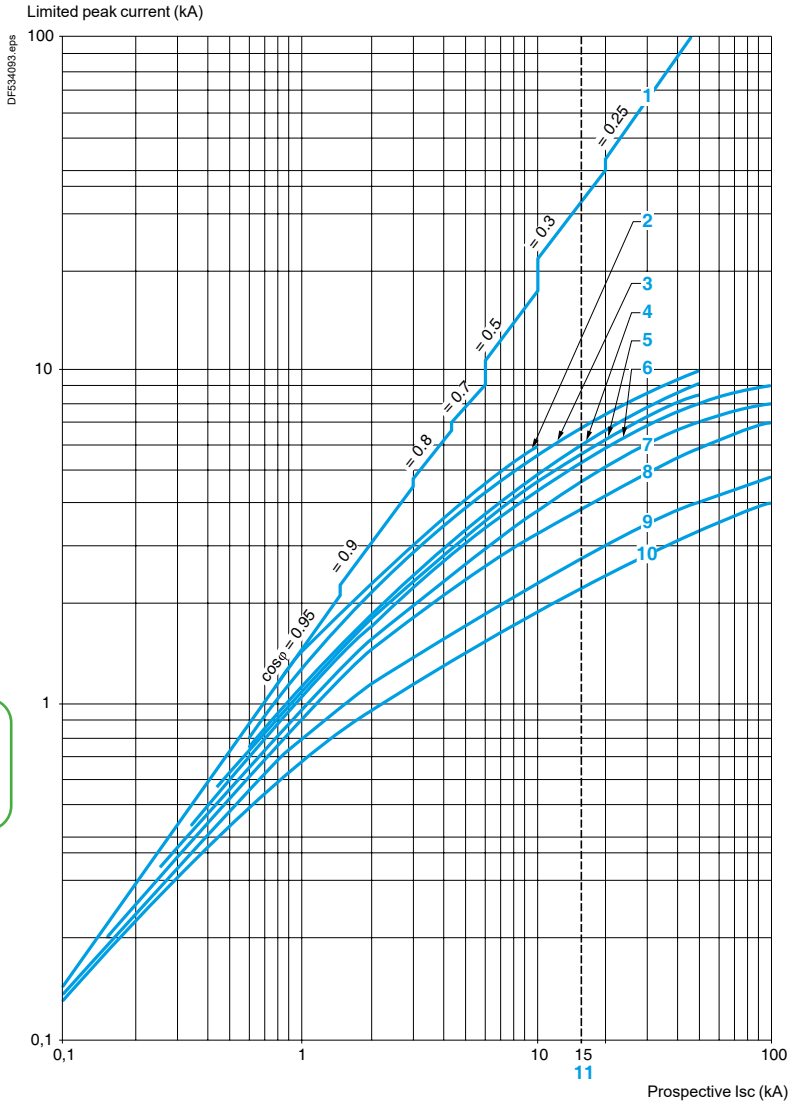

1 Maximum peak current
2 32 A
3 25 A
4 18 A
5 14 A
6 10 A
7 6.3 A
8 4 A
9 2.5 A
10 1.6 A
11 Limit of rated ultimate breaking capacity on short-circuit of GV2LE (14, 18, 23 and 25 A ratings).

Ref.
Motor circuit breakers

Curves

Current limitation on short-circuit for GV2L and GV2LE + thermal overload relay LRD or LR2K (3-phase 400/415 V)

Dynamic stress

I peak = f (prospective Isc) at 1.05 Ue = 435 V

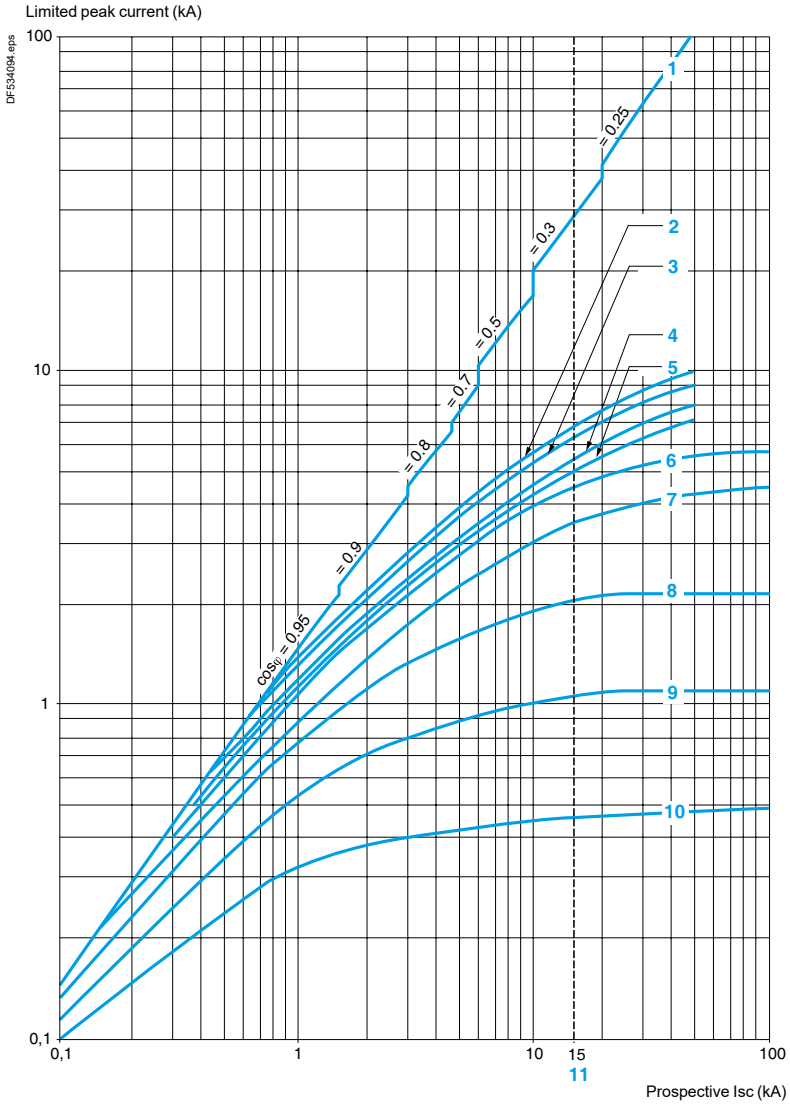

1 Maximum peak current
2 32 A
3 25 A
4 18 A
5 14 A
6 10 A
7 6.3 A
8 4 A
9 2.5 A
10 1.6 A
11 Limit of rated ultimate breaking capacity on short-circuit of GV2LE (14, 18, 23 and 25 A ratings).

Ref.
Motor circuit breakers

Thermal limit on short-circuit for GV2LE only

Thermal limit in kA²s in the magnetic operating zone

Sum of I²dt = f (prospective Isc) at 1.05 Ue = 435 V

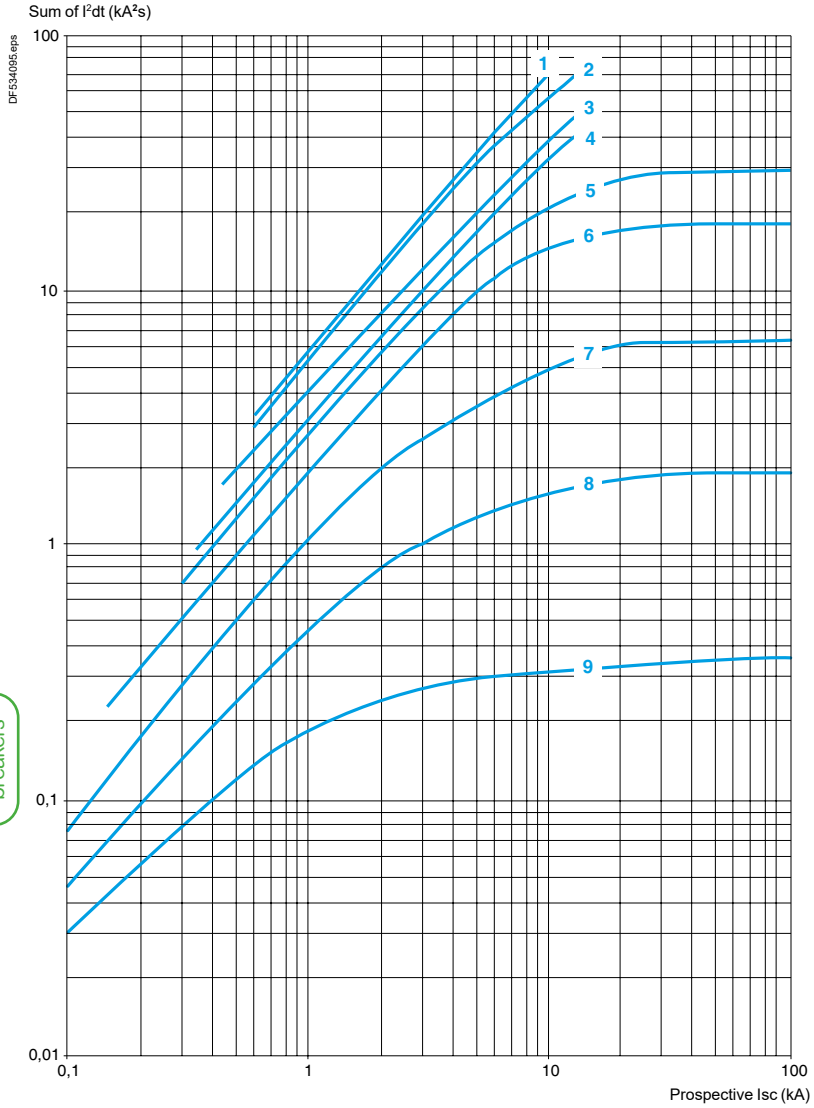

1 32 A
2 25 A
3 18 A
4 14 A
5 10 A
6 6.3 A
7 4 A
8 2.5 A
9 1.6 A

Ref.
Motor circuit breakers

Curves

Thermal limit on short-circuit for GV2L only

Thermal limit in kA²s in the magnetic operating zone

Sum of I²dt = f (prospective Isc) at 1.05 Ue = 435 V

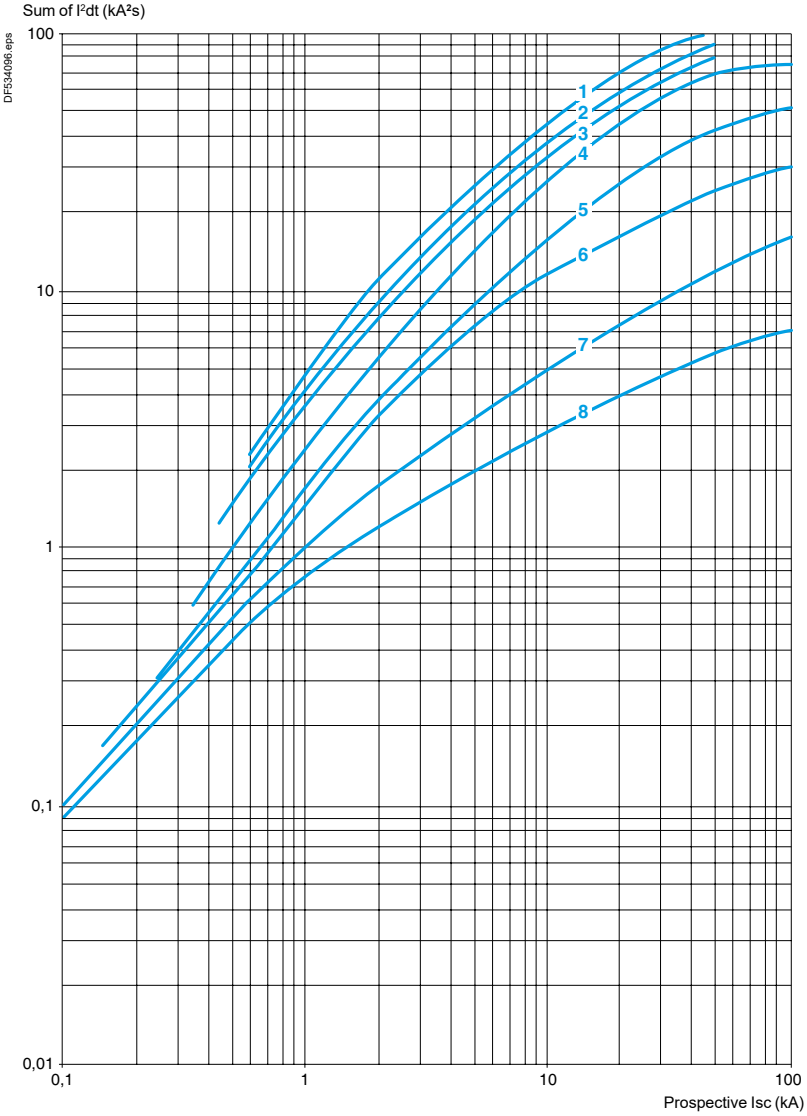

1 25 A and 32 A
2 18 A
3 14 A
4 10 A
5 6.3 A
6 4 A
7 2.5 A
8 1.6 A

Ref.
Motor circuit breakers

Thermal limit on short-circuit for GV2L and GV2LE + thermal overload relay LRD or LR2K

Thermal limit in kA²s in the magnetic operating zone

Sum of I²dt = f (prospective Isc) at 1.05 Ue = 435 V

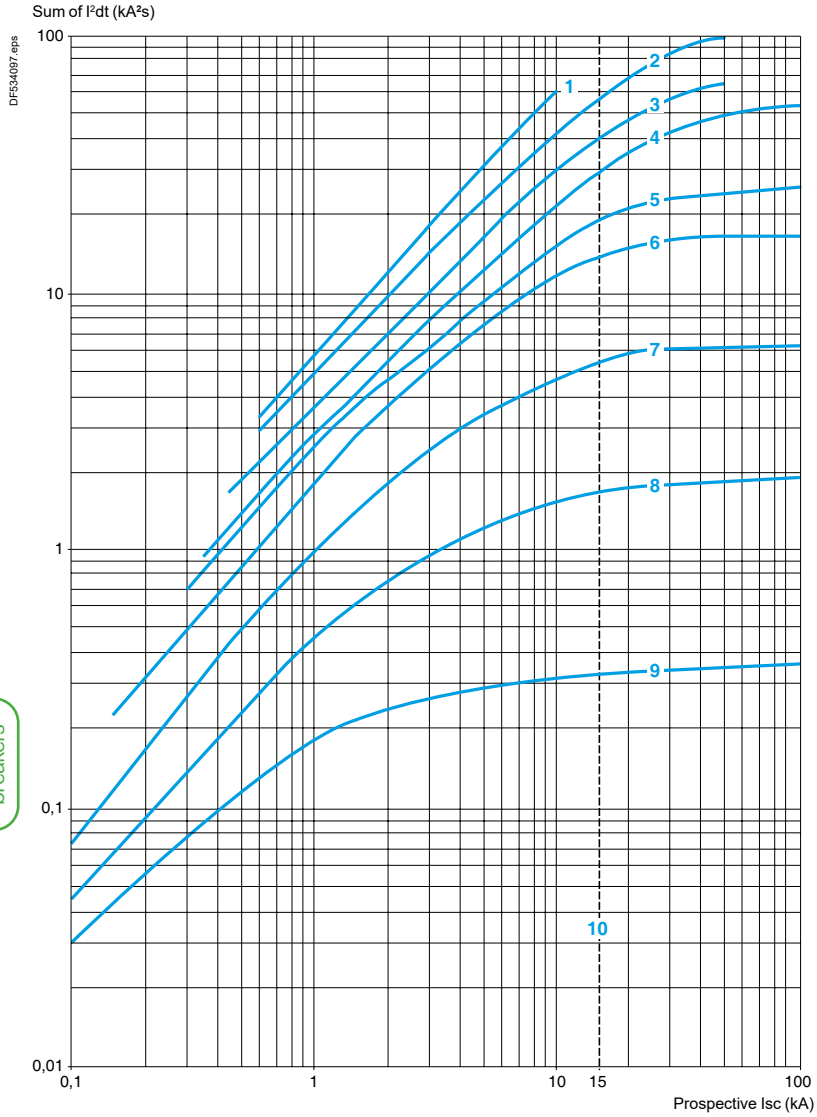

1 32 A (GV2LE32)
2 25 A and 32 A (GV2L32)
3 18 A
4 14 A
5 10 A
6 6.3 A
7 4 A
8 2.5 A
9 1.6 A
10 Limit of rated ultimate breaking capacity on short-circuit of GV2LE (14, 18, 23 and 25 A ratings).

Ref.
Motor circuit breakers

Curves

Thermal-magnetic tripping curves for GV2ME, GV2RT and GV2P

Average operating times at 20 °C related to multiples of the setting current

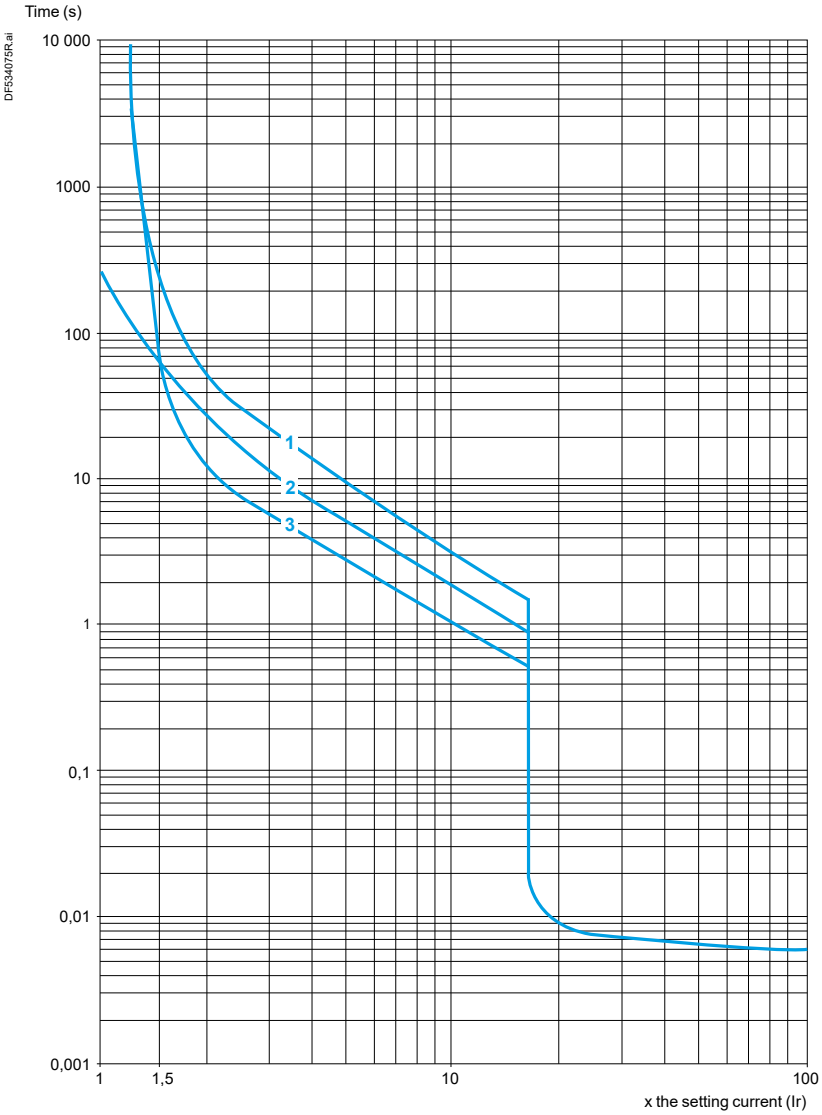

1 3 poles from cold state
2 2 poles from cold state
3 3 poles from hot state

Ref.
Motor circuit breakers

Current limitation on short-circuit for GV2ME, GV2RT and GV2P (3-phase 400/415 V)

Dynamic stress

I peak = f (prospective Isc) at 1.05 Ue = 435 V

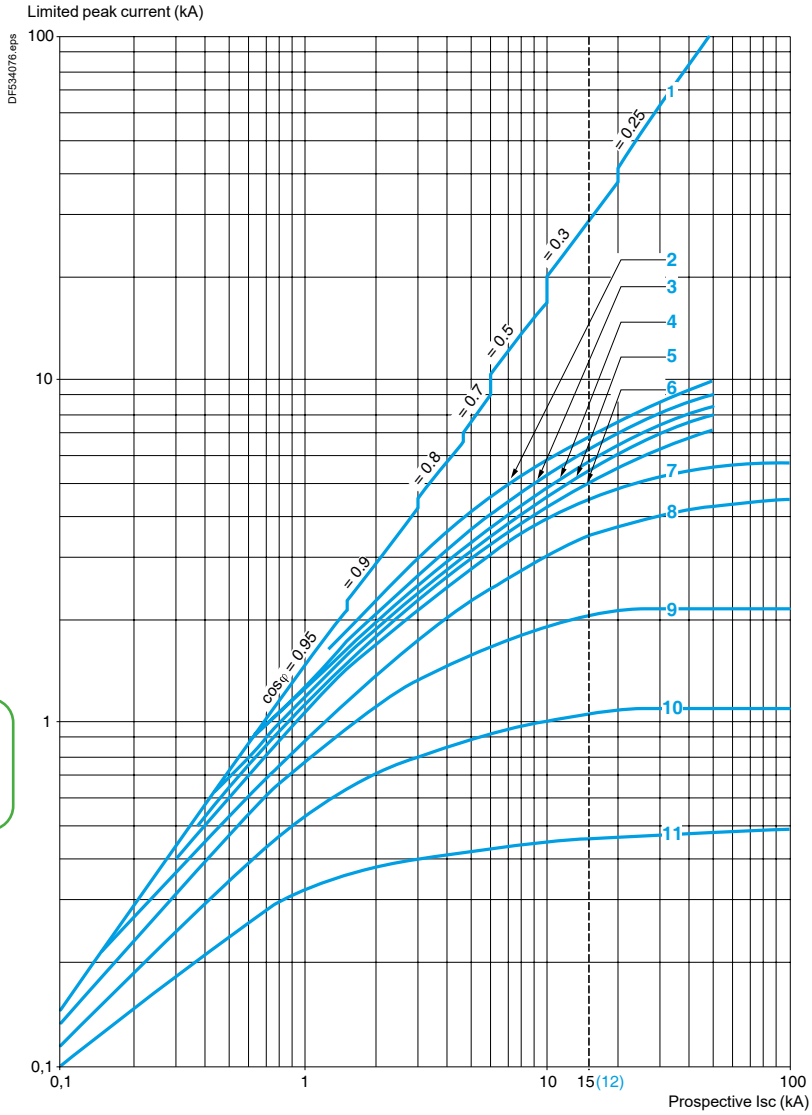

1 Maximum peak current
2 24 - 32 A
3 20 - 25 A
4 17 - 23 A
5 13 - 18 A
6 9 - 14 A
7 6 - 10 A
8 4 - 6.3 A
9 2.5 - 4 A
10 1.6 - 2.5 A
11 1 - 1.6 A
12 Limit of rated ultimate breaking capacity on short-circuit of GV2ME (14, 18, 23 and 25 A ratings)

Ref.
Motor circuit breakers

Curves

Thermal limit on short-circuit for GV2ME and GV2RT

Thermal limit in kA²s in the magnetic operating zone

Sum of I²dt = f (prospective Isc) at 1.05 Ue = 435 V

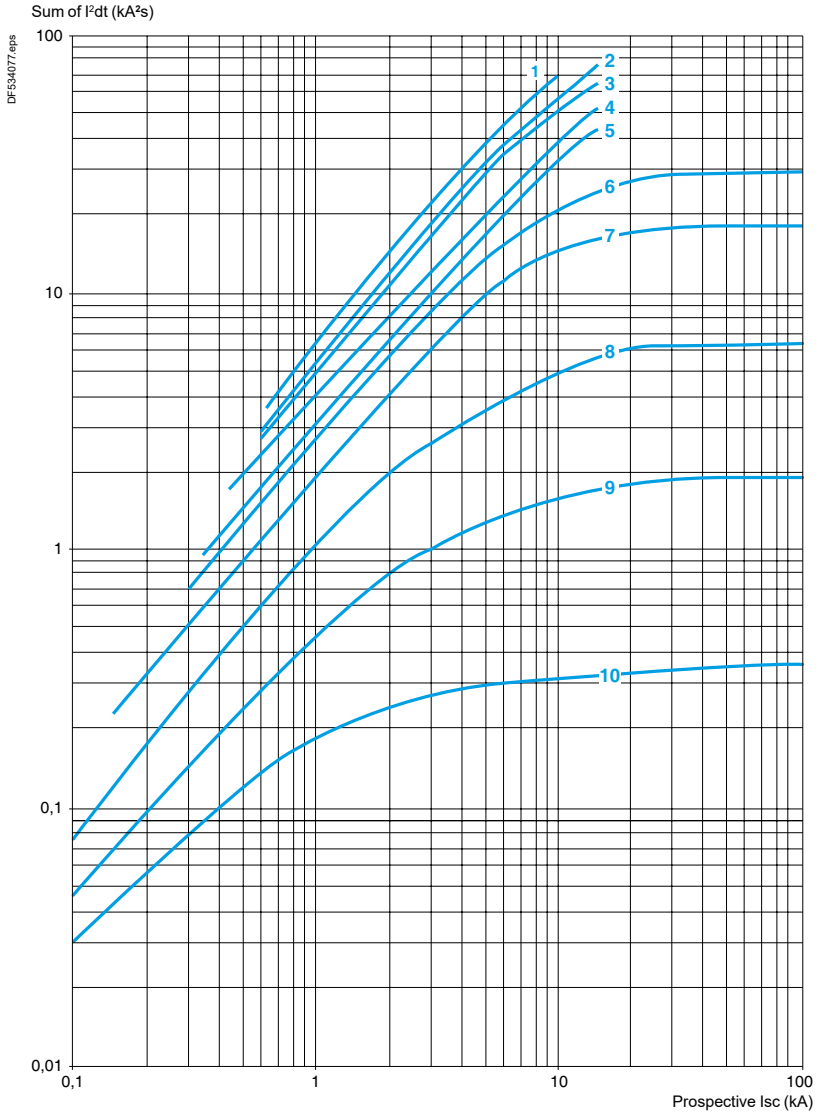

1 24 - 32 A
2 20 - 25 A
3 17 - 23 A
4 13 - 18 A
5 9 - 14 A
6 6 - 10 A
7 4 - 6.3 A
8 2.5 - 4 A
9 1.6 - 2.5 A
10 1 - 1.6 A

Thermal limit on short-circuit for GV2P

Thermal limit in kA²s in the magnetic operating zone

Sum of I²dt = f (prospective Isc) at 1.05 Ue = 435 V

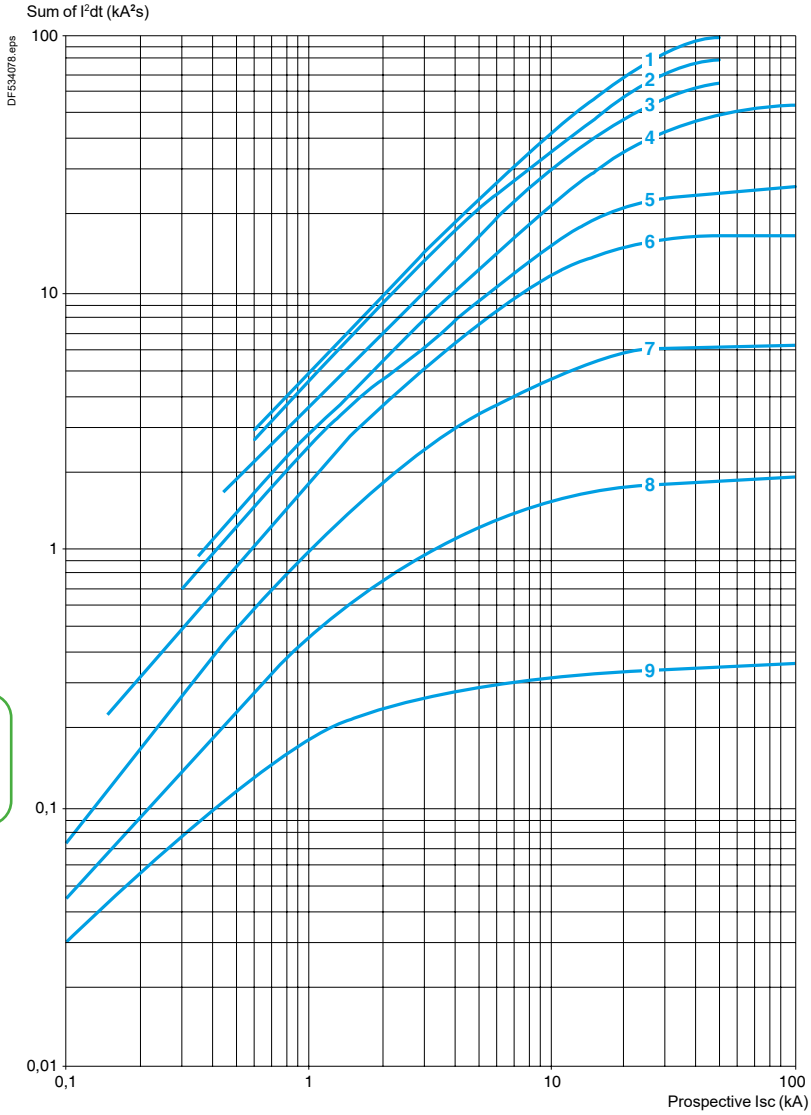

1 20 - 25 A, 24 - 32 A
2 17 - 23 A
3 13 - 18 A
4 9 - 14 A
5 6 - 10 A
6 4 - 6.3 A
7 2.5 - 4 A
8 1.6 - 2.5 A
9 1 - 1.6 A

Characteristics

Characteristics of GV2 electric trips

Type of trip			GVAU●●● MN undervoltage trip	GVAX●●● MN undervoltage trip for GV2ME - safety device for dangerous machines	GVAS●●● MX shunt trip
Rated insulation voltage (Ui)	Conforming to IEC 60947-1	**V**	690	500	690
	Conforming to UL 60947-4-1, CSA C22.2 n° 60947-4-1	**V**	600	-	600
Operational voltage (Ue)	Conforming to IEC 60947-1	**V**	0.85...1.1 Uc	0.85...1.1 Uc	0.7...1.1 Uc
Drop-out voltage		**V**	0.7...0.35 Uc	0.7...0.35 Uc	0.75...0.2 Uc
Inrush consumption	~ ⎓	**VA**	12	12	14
Sealed consumption	~ ⎓	**VA**	3.5	3.5	5
Operating time	Conforming to IEC 60947-1	**ms**	From the moment the voltage reaches its operational value until opening of the circuit breaker. 10...15		
On-load factor			100 %		
Cabling (screw clamp connection)	Number of conductors		2 or 4		
	Solid cable	**mm²**	1...2.5		
	Flexible cable without cable end	**mm²** **AWG**	0.75...2.5		
	Flexible cable with cable end	**mm²**	0.75...2.5		
Tightening torque		**N.m**	1.4 max		
Mechanical durability (C.O.: Close - Open)		**C.O.**	30000 (GV2ME and GV2P)		

References:
page B6/21

Dimensions:
pages B6/90 and B6/93

Characteristics

Type of contacts			Instantaneous auxiliary GVAN, GVAD							Fault signalling GVAD, GVAM11 (1)				Instantaneous auxiliary GVAE			
Rated insulation voltage (Ui) (associated insulation coordination)	Conforming to IEC 60947-1	**V**	690							690				250 (690 in relation to main circuit)			
	Conforming to UL 60947-4-1, CSA C22.2 n° 60947-4-1	**V**	600							300				300			
Conventional thermal current (Ith)	Conforming to IEC 60947-5-1	**A**	6							2.5				2.5			
	Conforming to UL 60947-5-1, CSA C22.2 n° 60947-5-1	**A**	5							1				1			
Mechanical durability (C.O.: Close - Open)		**C.O.**	100 000							1000				100 000			
Operational power and current conforming to IEC 60947-5-1. a.c. operation			AC-15/100 000 C.O.							AC-14/1000 C.O.				AC-15/100 000 C.O.			
	Rated operational voltage (Ue)	**V**	**48**	**110 127**	**230 240**	**380 415**	**440**	**500**	**690**	**24**	**48**	**110 127**	**230 240**	**24**	**48**	**110 127**	**230 240**
Operation	Operational power, normal conditions	**VA**	300	500	720	850	650	500	414	36	48	72	72	48	60	120	120
	Occasional breaking and making capacities, abnormal conditions	**kVA**	3	7	13	15	13	12	9	0.22	0.3	0.45	0.45	0.48	0.6	1.27	2.4
	Rated operational current (Ie)	**A**	6	4.5	3.3	2.2	1.5	1	0.6	1.5	1	0.5	0.3	2	1.25	1	0.5
Operational power and current conforming to IEC 60947-5-1. d.c.			DC-13/100 000 C.O.							DC-13/1000 C.O.				DC-13/100 000 C.O.			
	Rated operational voltage (Ue)	**V**	**24**	**48**	**60**	**110**	**240** (2)	**–**	**–**	**24**	**48**	**60**	**–**	**24**	**48**	**60**	**–**
Operation	Operational power, normal conditions	**W**	140	240	180	140	120	–	–	24	15	9	–	24	15	9	–
	Occasional breaking and making capacities, abnormal conditions	**W**	240	360	240	210	180	–	–	100	50	50	–	100	50	50	–
	Rated operational current (Ie)	**A**	6	5	3	1.3	0.5	–	–	1	0.3	0.15	–	1	0.3	0.15	–
Low power switching reliability of contact			**GVAE**: Number of failures for "n" million operating cycles (17 V-5 mA): = 10^{-6}														
Minimum operational conditions		**V**	17														
		mA	5														
Short-circuit protection			By **GB2CB●●** circuit breaker (rating according to operational current for Ue ≤ 415 V) or by gG fuse 10 A max											**GB2CB06** or gG fuse 10 A max			
Cabling, screw clamp terminals	Number of conductors		**1**			**2**											
	Solid cable	**mm²**	1…2.5			1…2.5											
	Flexible cable without cable end	**mm²**	0.75…2.5			0.75…2.5											
	Flexible cable with cable end	**mm²**	0.75…1.5			0.75…1.5											
	Tightening torque	**N.m**	1.4 max			1.4 max											
Cabling, spring terminal connections			**GVAN** only														
	Flexible cable without cable end	**mm²**	0.75…2.5			0.75…2.5				–				0.75…1.5			

Operation of instantaneous auxiliary contacts

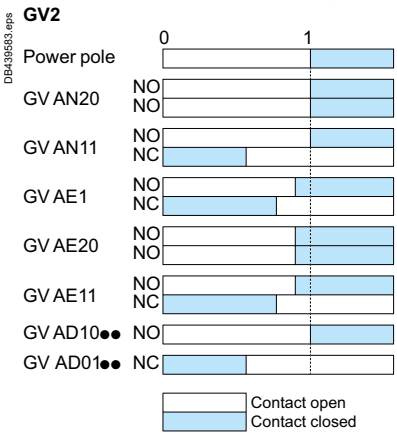

Operation of fault signalling contacts

GVAM11
Change of state following tripping on short-circuit.

GVAD10●● and **GVAD01●●**
Change of state following tripping on short-circuit, overload or undervoltage.

(1) For application example of fault signalling contact and short-circuit signalling contact.
*(2) Add an RC circuit type **LA4D** to the load terminals.*

References:
page B6/21

Dimensions:
pages B6/90 and B6/93

Life Is On Schneider Electric

Characteristics

Characteristics of 3-pole busbars GV2G●●●

			GV2G●●●
Rated insulation voltage (Ui)	Conforming to IEC 60947-1	V	690
Conventional thermal current (Ith)	Conforming to IEC 60439-1	A	63
Rated operational current (Ie)		A	63
Permissible peak current (I peak)		kA	11
Permissible thermal limit (I^2t)		kA^2s	104
Degree of protection	Conforming to IEC 60529		IP 20
Terminal block			Yes

Characteristics of terminal blocks GV2G05 and GV1G09 (for GV2ME and GV2P)

Rated insulation voltage (Ui)	Conforming to IEC 60947-1	V	690	
Conventional thermal current (Ith)	Conforming to IEC 60439-1	A	63	
Rated operational current (Ie)		A	63	115
Degree of protection	Conforming to IEC 60529		IP 20	
Connection	Solid cable	mm^2	1 x 1.5 to 25 or 2 x 1.5 to 6	
	Flexible cable without cable end	mm^2	1 x 1.5 to 16 or 2 x 1.5 to 4	
	Flexible cable with cable end	mm^2	1 x 1.5 to 16 or 2 x 1.5 to 4	
	Flexible or solid cable AWG		1 AWG 4	
Tightening torque	Connector	N.m	2.2	
	Screw clamp terminals	N.m	1.7	

Characteristics of current limiters (GV2ME and GV2P)

Type			GV1L3		LA9LB920	
Rated insulation voltage (Ui)	Conforming to IEC 60947-1	V	690		690	
Conventional thermal current (Ith)	Conforming to IEC 60947-1	A	63		63	
Rated operational current (Ie)		A	32		32	
Operating threshold	rms current	A	1500 (non adjustable threshold)		1000 (non adjustable threshold)	
Connection			**1 conductor**	**2 conductors**	**1 conductor**	**2 conductors**
	Solid cable	mm^2	1.5…25	1.5…10	1.5…25	1.5…10
	Flexible cable without cable end	mm^2	1.5…25	2.5…10	1.5…25	1.5…10
	Flexible cable with cable end	mm^2	1.5…16	1.5… 4	1.5…16	1.5… 4
Tightening torque		N.m	2.2			

Ref.
Motor circuit breakers

References:
page B6/21

Dimensions:
page B6/97

Dimensions and mounting

GV2L

Dimensions

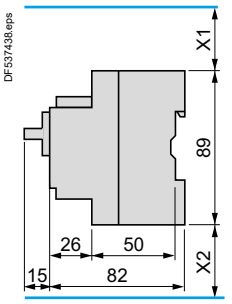

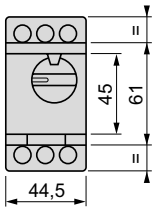

GVAD, AM, AN, AU, AS

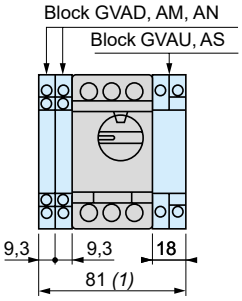

GV2AK00

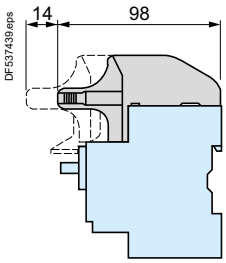

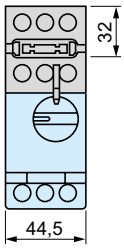

X1 Electrical clearance = 40 mm for Ue ⩽ 415 V, or 80 mm for Ue = 440 V, or 120 mm for Ue = 500 and 690 V.
X2 = 40 mm.

(1) Maximum.

Mounting

On rail AM1DE200, AM1ED200 (35 x 15)

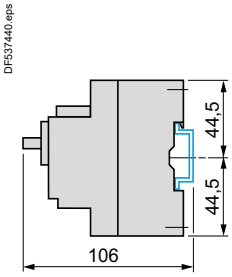

Panel mounted

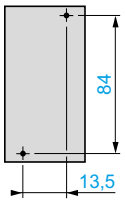

On pre-slotted mounting plate AM1PA

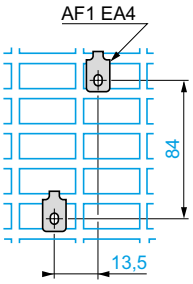

Adapter plate GK2AF01

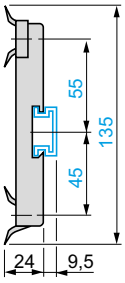

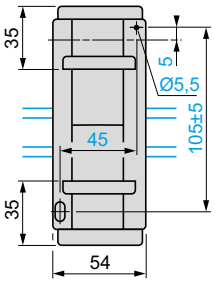

7.5 mm height compensation plate GV1F03

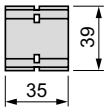

GV2LE

Dimensions

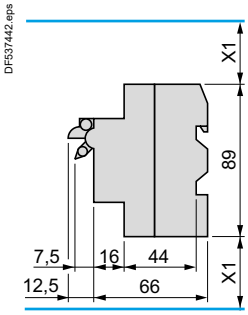

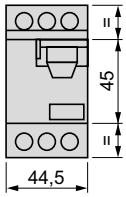

GVAD, AM, AN, AU, AS

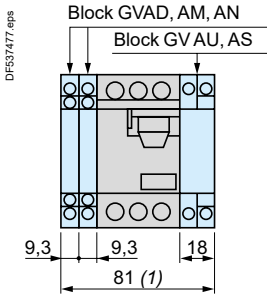

GVAE

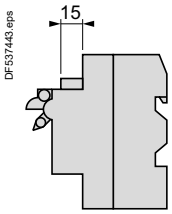

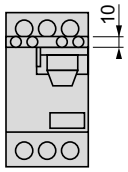

X1 Electrical clearance = 40 mm for Ue ⩽ 690 V.

(1) Maximum.

Mounting

On 35 mm ⎓ rail

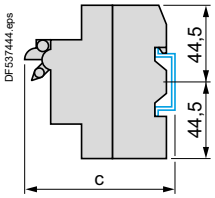

c = 80 on AM1DP200 (35 x 7.5) and 88 on AM1DE200, ED200 (35 x15)

On panel with adapter plate GV2AF02

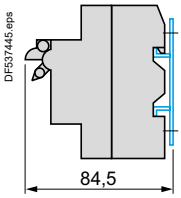

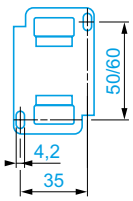

On pre-slotted plate AM1PA

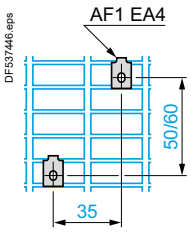

On rails DZ5MB201

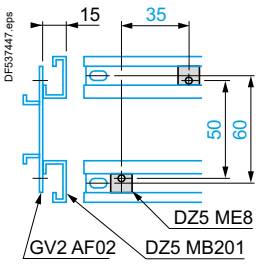

References:
pages B6/12 to B6/13

Characteristics:
pages B6/72 to B6/76

Curves:
pages B6/77 to B6/86

Dimensions and mounting

Mounting

Mounting of external operator GV2APN01, GV2APN02 or GV2APN04 for motor circuit breakers GV2L

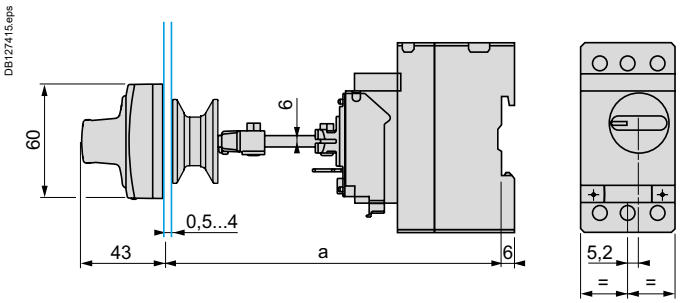

Door cut-out

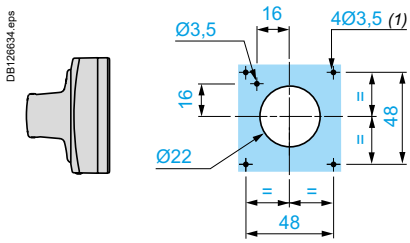

(1) For IP65 only.

Mounting of external operator GVAPH02 for motor circuit breakers GV2L

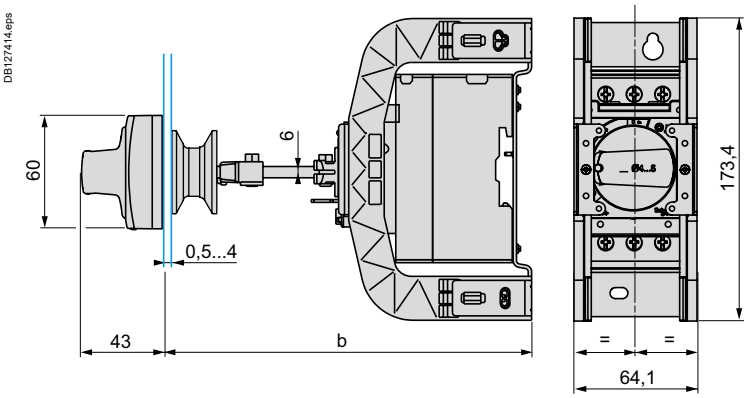

Door cut-out

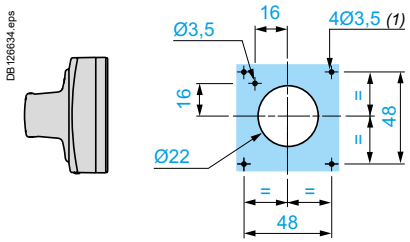

(1) For IP65 only.

	a		b	
	Mini	Maxi	Mini	Maxi
GV2APN●●	140	250		
GV2APN●● + GVAPH02			151	250
GV2APN●● + GVAPK11	250	434	-	-
GV2APN●● + GVAPH02 + GVAPK11	-	-	250	445

Mounting of external operator GV2AP03 for GV2LE

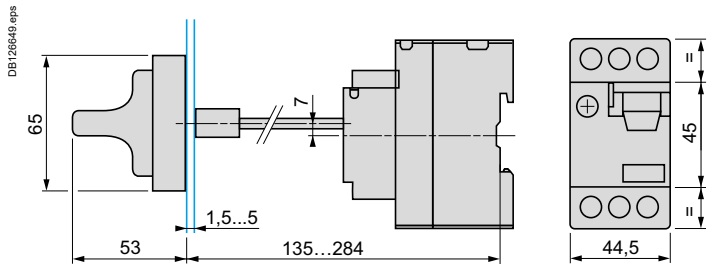

Door cut-out

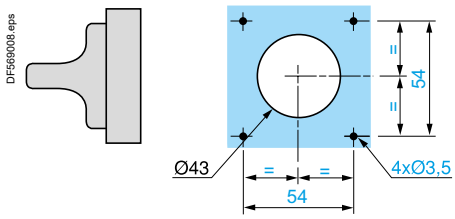

References:
page B6/24

Dimensions and mounting

GV2LE

Sets of busbars GV2G445, GV2G454, GV2G472, with terminal block GV2G05

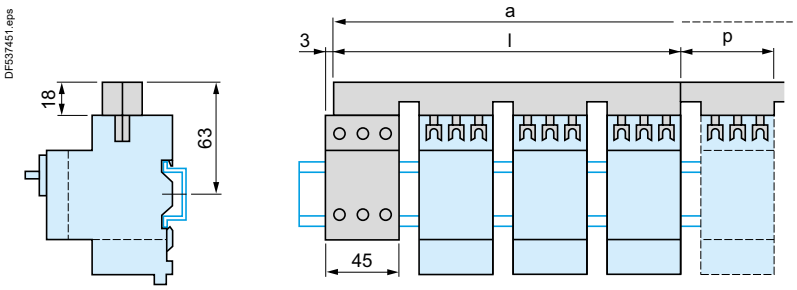

	l	p
GV2G445 (4 x 45 mm)	179	45
GV2G454 (4 x 54 mm)	206	54
GV2G472 (4 x 72 mm)	260	72

	a			
Number of tap-offs	**5**	**6**	**7**	**8**
GV2G445	224	269	314	359
GV2G454	260	314	368	422
GV2G472	332	404	476	548

Ref.

Sets of busbars GV2LE

Sets of busbars GV2G●●● with term. block GV1G09

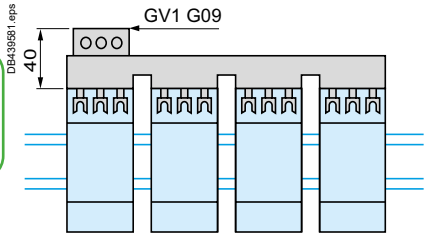

Sets of busbars GV2G245, GV2G254, GV2GR272

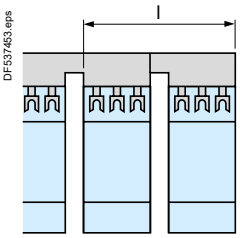

	l
GV2G245 (2 x 45 mm)	89
GV2G254 (2 x 54 mm)	98
GV2G272 (2 x 72 mm)	116

Set of busbars GV2G554

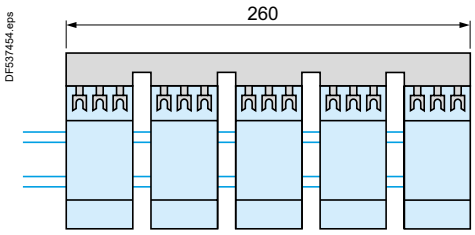

Sets of busbars GV2G345 and GV2G354

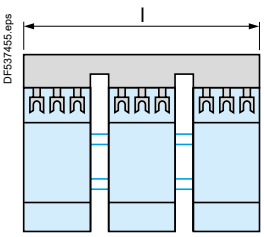

	l
GV2G345 (3 x 45 mm)	134
GV2G354 (3 x 54 mm)	152

References:
page B6/23

Characteristics:
page B6/89

Life Is On Schneider Electric

Dimensions and mounting

Dimensions

GV2ME

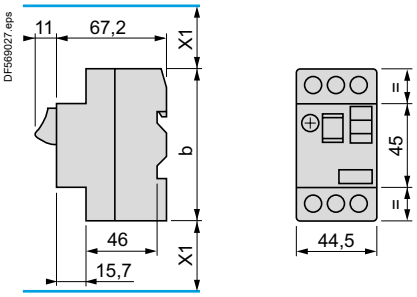

GVAX

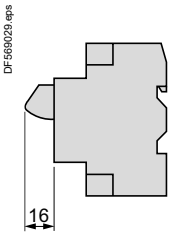

GVAD, AM, AN, AU, AS, AX

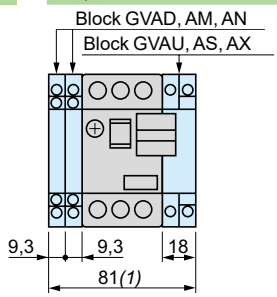

GVAE

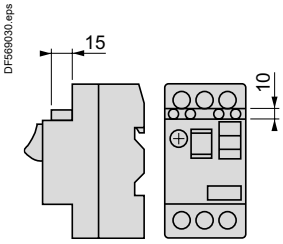

	b
GV2ME●●	89
GV2ME●●3	101

(1) Maximum.
X1 Electrical clearance = 40 mm for Ue ≤ 690 V

GV2P

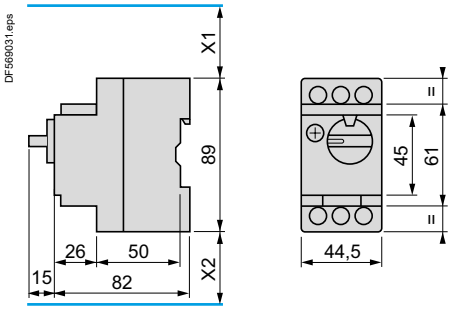

GVAD, AM, AN, AU, AS

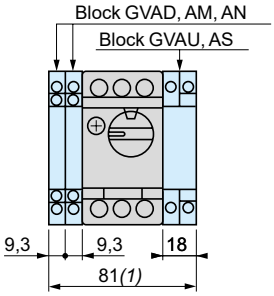

GV2AK00

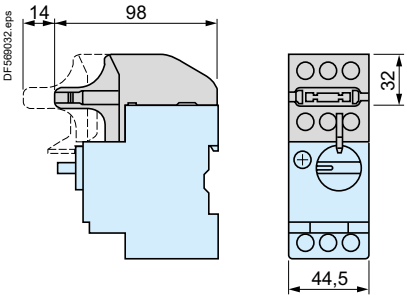

(1) Maximum.
X1 Electrical clearance = 40 mm for Ue ≤ 415 V, or 80 mm for Ue = 440 V, or 120 mm for Ue = 500 and 690 V
X2 = 40 mm

GV2GH7

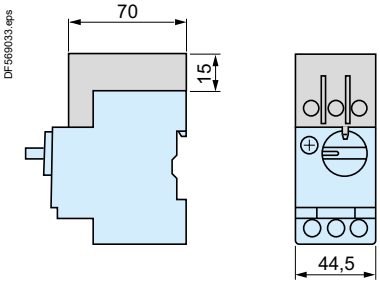

Ref.
Motor circuit breakers

Dimensions and mounting

Mounting

GV2ME

On 35 mm ⊔ rail | **On panel with adapter plate GV2AF02** | **On pre-slotted plate AM1PA** | **On rails DZ5MB201**

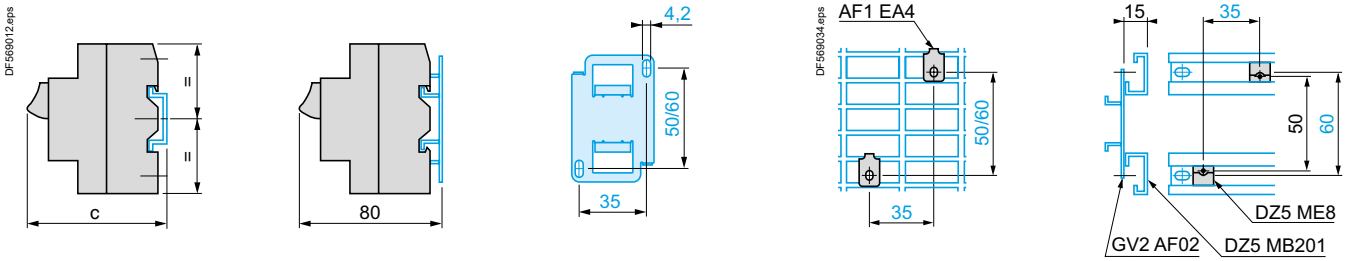

c = 78.5 on AM1 DP200 (35 x 7.5)
c = 86 on AM1 DE200, ED200 (35 x 15)

GV2P

On rail AM1DE200, ED200 (35 x 15) | **Panel mounted** | **On pre-slotted plate AM1PA** | **Adapter plate GK2AF01**

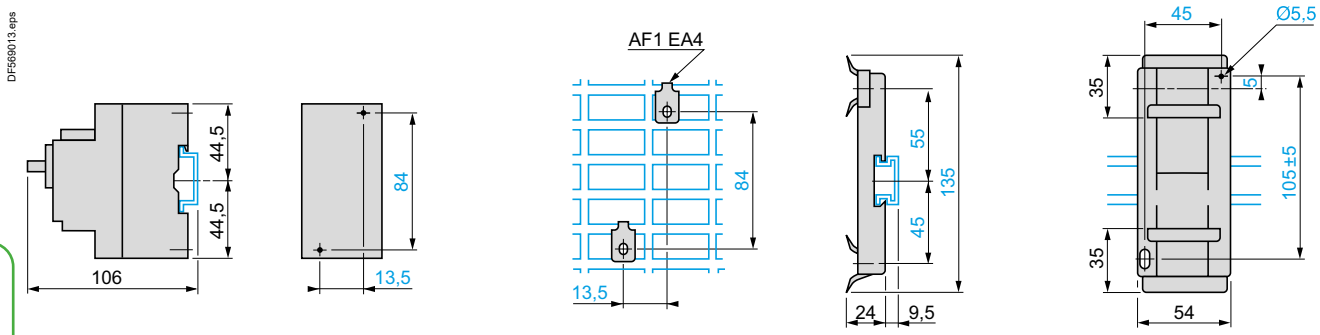

Dimensions

GV2AF01

Combination GV2ME + k contactor

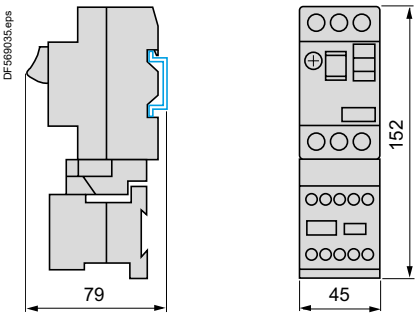

GV2AF3

Combination GV2ME + d contactor | **Combination GV2P + d contactor**

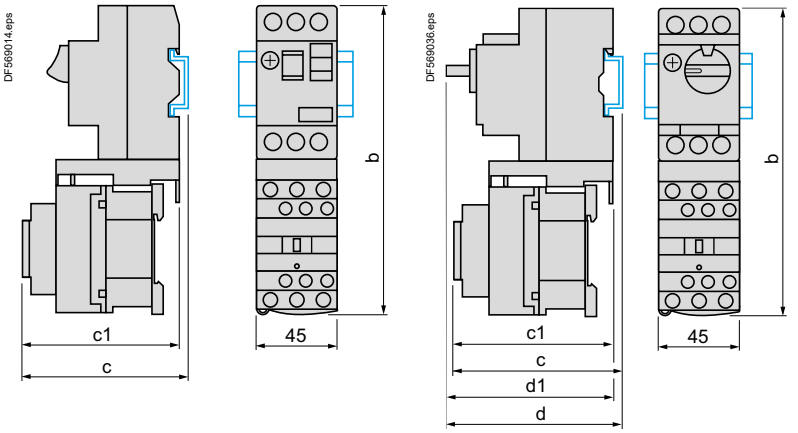

GV2ME +	LC1D09 ...D18	LC1D25 and D32
b	176.4	186.8
c1	94.1	100.4
c	99.6	105.9

GV2P +	LC1D09 ...D18	LC1D25 and D32
b	176.4	186.8
c1	100.1	106.4
c	105.6	111.9
d1	95	95
d	100.5	100.5

Ref.
Motor circuit breakers

Dimensions and mounting

Dimensions

GV2AF4 + LAD311

Combination GV2ME + d contactor

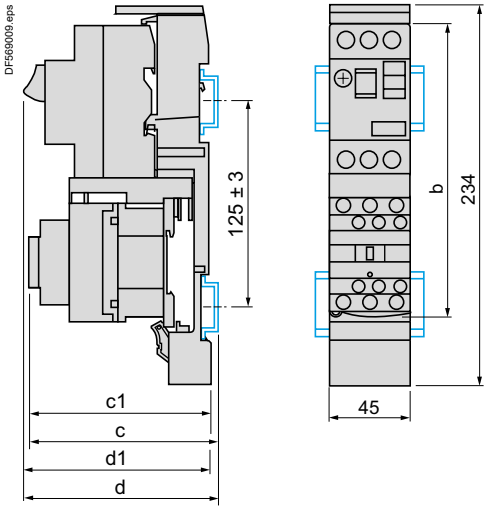

GV2ME +	LC1D09…D18	LC1D25 and D32
b	176.4	186.8
c1	130.1	136.4
c	135.6	141.9
d1	107	107
d	112.5	112.5

GV2ME + GV1L3 (current limiter)

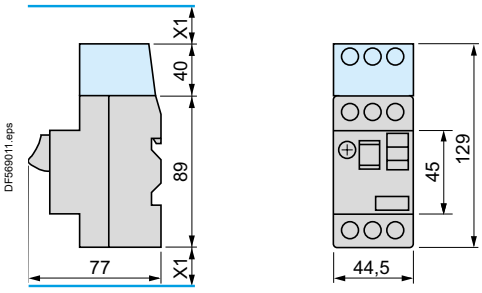

X1 = 10 mm for Ue = 230 V
or 30 mm for 230 V < Ue ≤ 690 V

7.5 mm height compensation plate GV1F03

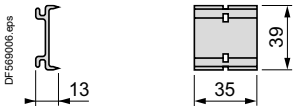

Ref.
Motor circuit breakers

Mounting

Mounting of external operator GV2APN01, GV2APN02 or GV2APN04 for motor circuit breakers GV2P

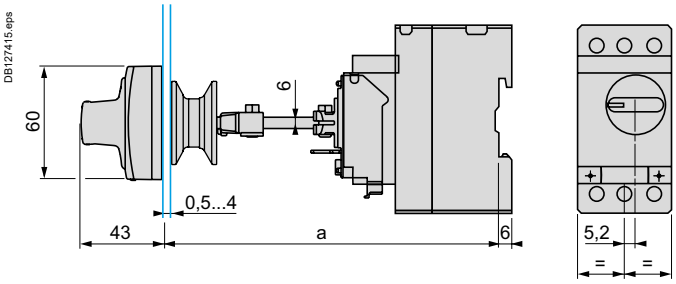

Door cut-out

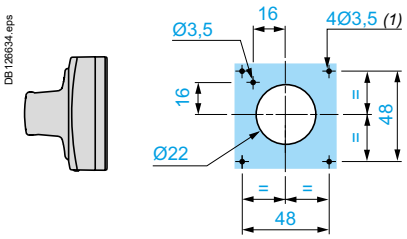

(1) For IP65 only.

Mounting of external operator GVAPH02 for motor circuit breakers GV2P

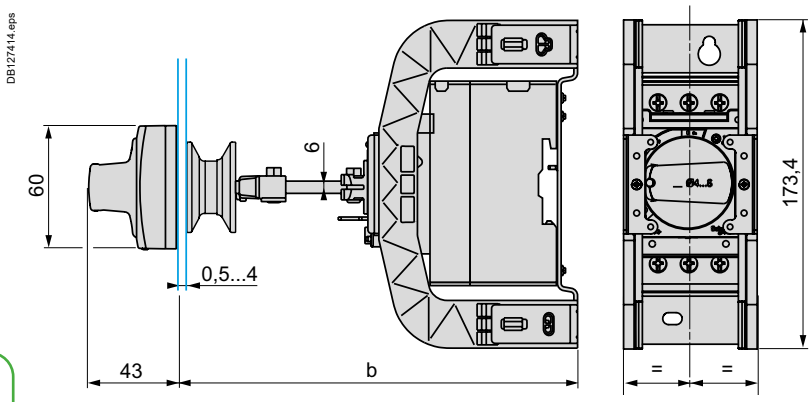

Door cut-out

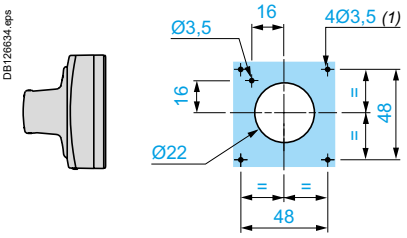

(1) For IP65 only.

	a		b	
	Mini	Maxi	Mini	Maxi
GV2APN●●	140	250		
GV2APN●● + GVAPH02			151	250
GV2APN●● + GVAPK11	250	434	-	-
GV2APN●● + GVAPH02 + GVAPK11	-	-	250	445

References:
page B6/24

Dimensions and mounting

GV2ME, GV2P

Sets of busbars GV2G445, GV2G454, GV2G472, with terminal block GV2G05

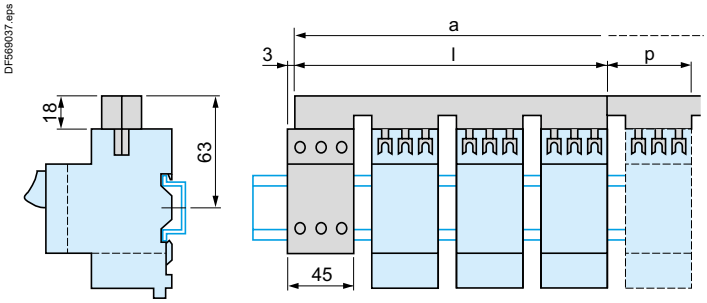

	l	p
GV2G445 (4 x 45 mm)	179	45
GV2G454 (4 x 54 mm)	206	54
GV2G472 (4 x 72 mm)	260	72

	a			
Number of tap-offs	**5**	**6**	**7**	**8**
GV2G445	224	269	314	359
GV2G454	260	314	368	422
GV2G472	332	404	476	548

Sets of busbars GV2G●●● with terminal block GV1G09

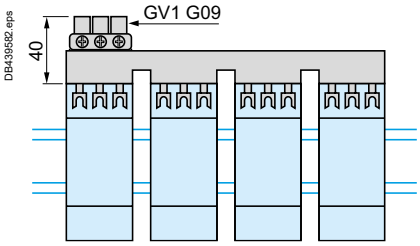

	l
GV2G245 (2 x 45 mm)	89
GV2G254 (2 x 54 mm)	98
GV2G272 (2 x 72 mm)	116

Sets of busbars GV2G245, GV2G254, GV2G272

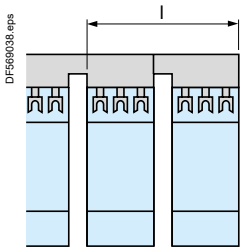

Sets of busbars GV2G554

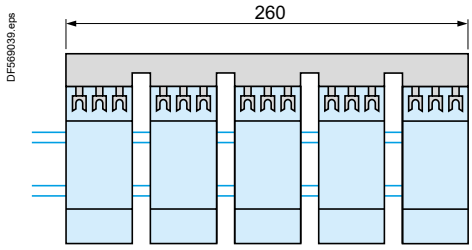

	l
GV2G345 (3 x 45 mm)	134
GV2G354 (3 x 54 mm)	152

Sets of busbars GV2G345 and GV2G354

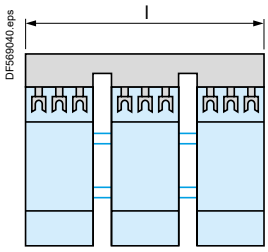

References:
page B6/23

Dimensions and mounting

GV2RT

Dimensions

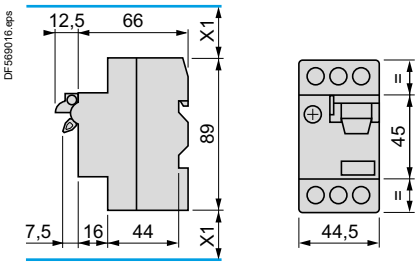

X1: Electrical clearance = 40 mm for Ue < 690 V

Mounting

Mounting of external operator GV2AP03

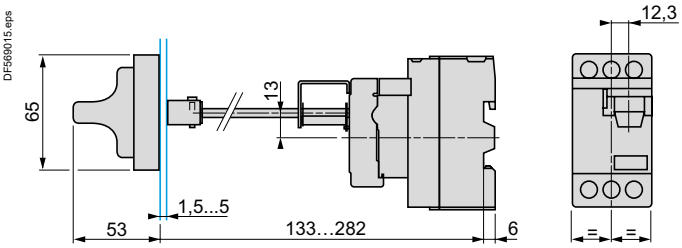

On 35 mm ⎓ rail

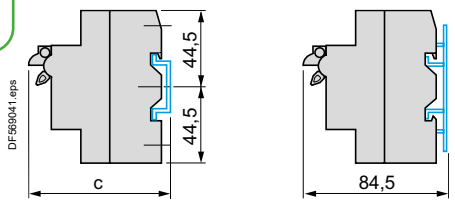

On panel with adapter plate GV2AF02

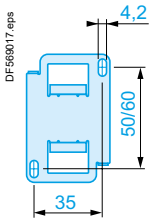

On pre-slotted plate AM1PA

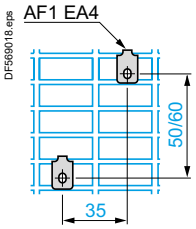

On rails DZ5MB

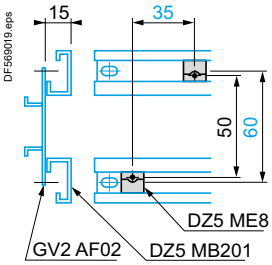

c = 80 on AM1DP200 (35 x 7.5)
c = 88 on AM1DE200, ED200 (35 x 15)

Ref.
Motor circuit breakers

Schemes

Schemes

GV2L●●

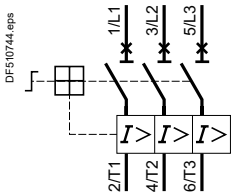

GV2LE●●

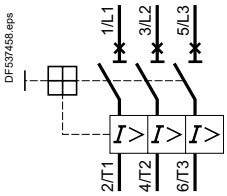

GV2P●●

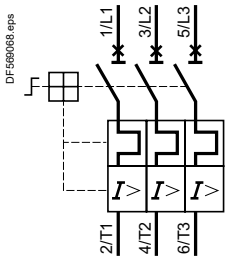

GV2ME●● and GV2RT

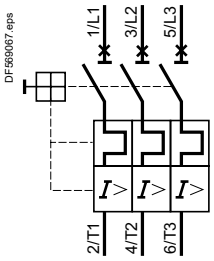

Front mounting add-on contact blocks
Instantaneous auxiliary contacts

GVAE1

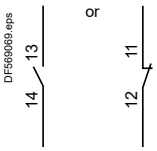

GVAE11

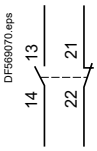

GVAE20

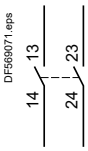

Front mounting add-on contact blocks
Instantaneous auxiliary contacts and fault signalling contacts

GVAED101

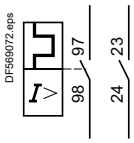

GVAED011

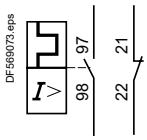

Side mounting add-on contact blocks
Instantaneous auxiliary contacts and fault signalling contacts

GVAD0110

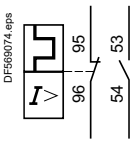

GVAD0101

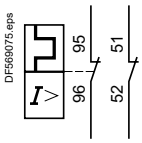

GVAD1010

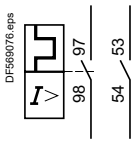

GVAD1001

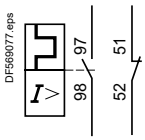

Instantaneous auxiliary contacts

GVAN11

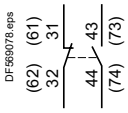

GVAN20

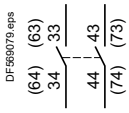

Short-circuit signalling contacts

GVAM11

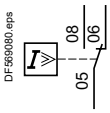

Start-Stop signalling contact blocks

GK2AX10

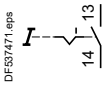

GK2AX20

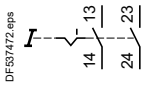

GK2AX50

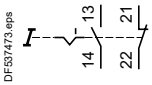

Fault signaling contact blocks

GK2AX52

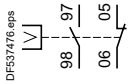

Voltage trips

GVAU●●●

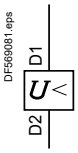

GVAS●●●

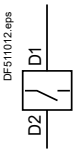

GVAX●●●

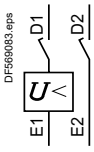

Current limiter

GV1L3

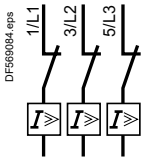

Use of fault signalling contact and short-circuit signalling contact

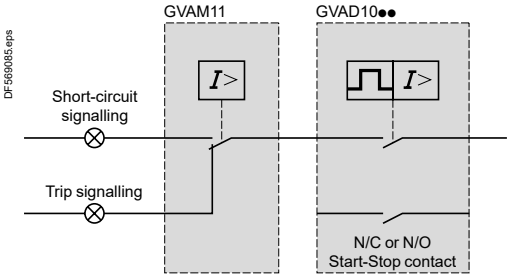

Connection of undervoltage trip for dangerous machines (conforming to INRS) on GV2ME only

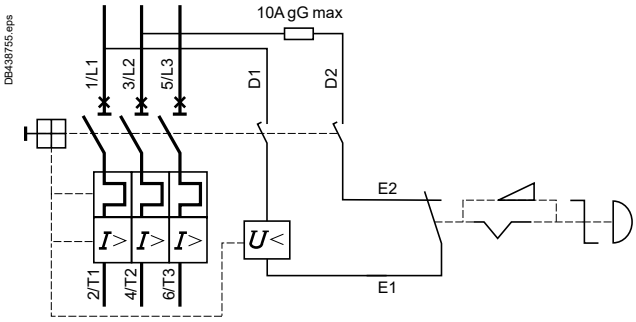

References:
pages B6/11 to B6/24

TeSys Deca - Frame 3

5 to 45 kW

Environment

Circuit breaker type				GV3L	GV3P
Conforming to standards				IEC/EN 60947-4-1 IEC/EN 60947-2 UL 60947-4-1 CSA C22.2 n° 60947-4-1	IEC/EN 60947-4-1 IEC/EN 60947-2 UL 60947-4-1 CSA C22.2 n° 60947-4-1
Product certifications				CCC, EAC, BV, LROS, DNV-GL, ABS, UL [1], CSA [2], UKCA	CCC, UL[4], CSA[5], EAC, ATEX, BV, LROS, DNV-GL, ABS, UKCA
Climatic withstand				According to IACS E10	
Degree of protection (front face)	Conforming to IEC 60529	Open mounted		Against direct finger contact: IP20	
		In enclosure		-	**GV3PC01** and **GV3PC02**: IP55
Shock resistance	Conforming to IEC 60068-2-27			On: 15 gn -11 ms (On: 5 gn -11 ms for GV3L73, GV3L80, GV3P73, GV3P80) Off: 30 gn -11 ms	
Vibration resistance [3]	Conforming to IEC 60068-2-6			4 gn (5…300 Hz)	
Ambient air temperature	Storage		**°C**	-40…+80	
	Operation	Open mounted	**°C**	-20…+60 [3]	
		In enclosure	**°C**	–	-20…+40
Temperature compensation		Open mounted	**°C**	–	-20…+60
		In enclosure	**°C**	–	-20…+40
Flame resistance	Conforming to IEC 60695-2-11		**°C**	960	
Maximum operating altitude			**m**	3000	
Suitable for isolation	Conforming to IEC 60947-1 § 7-1-6			Yes	–
Resistance to mechanical impact			**J**	–	10
					IK09 (in enclosure)
Sensitivity to phase failure				Yes, conforming to IEC 60947-4-1 § 8-2-1-5-2 for GV3P	

Technical characteristics

Circuit breaker type			GV3L	GV3P
Utilisation category	Conforming to IEC 60947-2		A	–
	Conforming to IEC 60947-4-1		–	AC-3
Rated operational voltage (Ue)	Conforming to IEC 60947-2	**V**	690	
Rated insulation voltage (Ui)	Conforming to IEC 60947-2	**V**	690	
Rated voltage	Conforming to UL 60947-4-1, CSA C 22.2 n° 60947-4-1	**V**		600
Rated operational frequency	Conforming to IEC 60947-4-1 UL, CSA	**Hz**	50/60	
Rated impulse withstand voltage (U imp)	Conforming to IEC 60947-2	**kV**	6	
Total power dissipated per pole		**W**	8	
Mechanical durability (C.O.: Close, Open)		**C.O.**	50 000	
Electrical durability for AC-3 duty	415 V In	**C.O.**	50 000 (20 000 for GV3L73, GV3P73, GV3L80, GV3P80)	
Duty class (maximum operating rate)		**C.O./h**	25	
Maximum conventional rated thermal current (Ith)	Conforming to IEC 60947-4-1	**A**	–	13 to 80
Rated duty	Conforming to IEC 60947-4-1			Continuous duty
Operating threshold of magnetic trips			14 I max	

*(1), (2) For **GV3L25** to **73**, may be followed by 6 or by 1.*
(3) Leave a space of 9 mm between 2 circuit breakers: either an empty space, or side mounting add-on contact blocks.
Side by side mounting is possible up to 40 °C.
*(4), (5) For **GV3P13** to **73**, may be followed by 6 or by 1.*

Ref.
Motor circuit breakers

Mounting characteristics

Operating position
Without derating, in relation to normal vertical mounting plane [1]

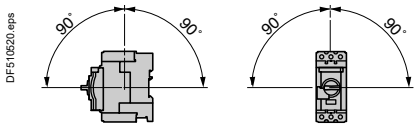

Connection characteristics

Connection to screw clamp terminals or spring terminals

Bare cables

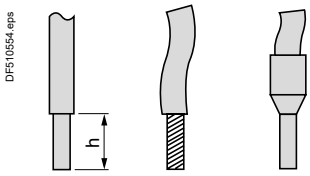

Circuit breaker type			GV3L		GV3P	
			Min.	Max.	Min.	Max.
Connection to screw clamp terminals [2] (Max. number of conductors x c.s.a.)	Solid cable	mm²	2 x 1	1 x 25 and 1 x 35	2 x 1	1 x 25 and 1 x 35
	Flexible cable without cable end	mm²	2 x 1	1 x 25 and 1 x 35	2 x 1	1 x 25 and 1 x 35
	Flexible cable with cable end	mm²	2 x 1	1 x 25 and 1 x 35	2 x 1	1 x 25 and 1 x 35
Tightening torque		N.m	5	5: 25 mm² 8: 35 mm²	5	5: 25 mm² 8: 35 mm²

Connection by bars or lugs

Bars or lugs

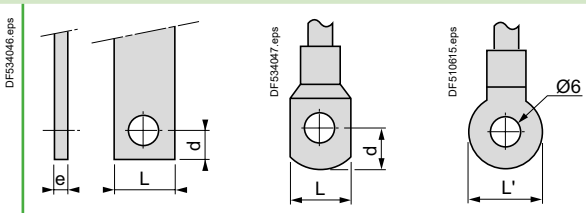

Circuit breaker type			GV3L••6	GV3P••6
Pitch	Without spreaders	mm	17.5	
	With spreaders	mm	–	
Bars or cables with lugs	e	mm	≤ 6	
	L	mm	≤ 13.5	
	L'	mm	≤ 16.5	
	d	mm	≤ 10	
Screws			M6	
	Tightening torque	N.m	6	
Bare cables (copper or aluminium) with connectors	Height (h)	mm	–	
	C.s.a.	mm²	–	
	Tightening torque	N.m	–	

(1) When mounting on a vertical rail, fit a stop to prevent any slippage.
*(2) For motor circuit breakers **GV3P**: BTR hexagon socket head screws, **Ever**Link® system. Require use of an insulated Allen key, in compliance with local electrical wiring regulations.*
*(3) For cross-sections 1 to 1.5 mm², the use of an **LA9D99** cable end reducer is recommended.*

Ref.
Motor circuit breakers

Characteristics

Breaking capacity of GV3L

Type				GV3L25	GV3L32	GV3L40	GV3L50	GV3L65	GV3L73	GV3L80
Breaking capacity of the circuit-breaker only or of the circuit-breaker combined with a thermal overload relay	230/240 V	Icu	**kA**	100	100	100	100	100	65	65
		Ics % (1)		100	100	100	100	100	100	100
	400/415 V	Icu	**kA**	100	100	50	50	50	50	50
		Ics % (1)		100	100	100	100	100	60	60
	440 V	Icu	**kA**	50	50	50	50	50	50	50
		Ics % (1)		100	100	100	100	100	60	60
	500 V	Icu	**kA**	12	12	12	12	12	12	12
		Ics % (1)		50	50	50	50	50	50	50
	690 V	Icu	**kA**	6	6	6	6	6	6	6
		Ics % (1)		50	50	50	50	50	50	50
Associated fuses (if required) for use with circuit breaker only or circuit breaker combined with a thermal overload relay if Isc > breaking capacity	230/240 V	aM	**A**	★	★	★	★	★	★	★
		gG	**A**	★	★	★	★	★	★	★
	415 V	aM	**A**	★	★	★	★	125	125	125
		gG	**A**	★	★	★	★	160	160	160
	440 V	aM	**A**	63	80	125	125	125	125	125
		gG	**A**	80	100	160	160	160	160	160
	500 V	aM	**A**	63	63	63	63	80	80	80
		gG	**A**	80	80	80	80	100	100	100
	690 V	aM	**A**	50	50	50	50	63	63	63
		gG	**A**	63	63	63	63	80	80	80
Use of circuit breakers without fuses				Minimum cable length (in metres) limiting the maximum short-circuit current to 35 kA maximum.						
Cable c.s.a.			**mm²**	**≤ 25**	**35**	**50**	**70**	**95**	- (2)	- (2)
Isc (rms) 3-phase, incoming (Ue = 415 V)		50 kA	**m**	5	6	8	10	13	- (2)	- (2)
		45 kA	**m**	5	5	7	8	10	- (2)	- (2)
		40 kA	**m**	5	5	5	5	8	- (2)	- (2)
		37 kA	**m**	5	5	5	5	5	- (2)	- (2)

★ *Fuse not required: breaking capacity Icn > Isc.*
(1) As % of Icu.
(2) Please consult your Regional Sales Office.

Ref.
Motor circuit breakers

Characteristics

Breaking capacity of GV3P

Motor circuit breaker type				GV3P								
				13	18	25	32	40	50	65	73	80
Rating			A	13	18	25	32	40	50	65	73	80
Breaking capacity conforming to IEC 60947-2	230/240 V	Icu	kA	100	100	100	100	100	100	100	100	100
		Ics % (1)		100	100	100	100	100	100	100	100	100
	400/415 V	Icu	kA	100	100	100	100	50	50	50	50	50
		Ics % (1)		100	100	100	100	100	100	100	60	60
	440 V	Icu	kA	50	50	50	50	50	50	50	50	50
		Ics % (1)		100	100	100	100	100	100	100	60	60
	500 V	Icu	kA	12	12	12	12	12	12	12	12	12
		Ics % (1)		50	50	50	50	50	50	50	50	50
	690 V	Icu	kA	6	6	6	6	6	6	6	6	6
		Ics % (1)		50	50	50	50	50	50	50	50	50
Associated fuses, if required if Isc > breaking capacity Icu	230/240 V	aM	A	★	★	★	★	★	★	★	★	★
		gG	A	★	★	★	★	★	★	★	★	★
	415 V	aM	A	★	★	★	★	125	125	125	125	125
		gG	A	★	★	★	★	160	160	160	160	160
	440 V	aM	A	63	80	125	125	125	125	125	125	125
		gG	A	80	100	160	160	160	160	160	160	160
	500 V	aM	A	63	63	63	63	80	80	80	80	80
		gG	A	80	80	80	80	100	100	100	100	100
	690 V	aM	A	50	50	50	50	63	63	63	63	63
		gG	A	63	63	63	63	80	80	80	80	80

★ Fuse not required: breaking capacity Icn > Isc.
(1) As % of Icu.

Ref.
Motor circuit breakers

Curves

Tripping curves for GV3L combined with thermal overload relay LRD33

Average operating time at 20 °C without prior current flow

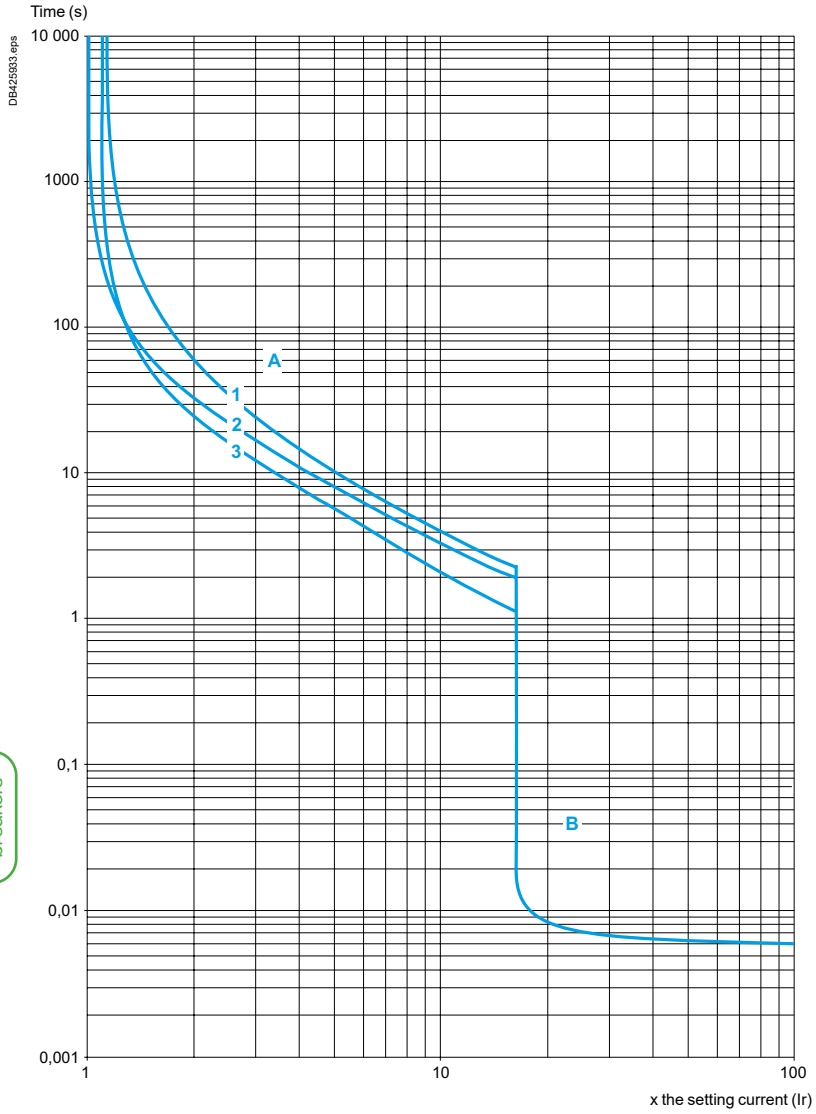

1 3 poles from cold state
2 2 poles from cold state
3 3 poles from hot state

A Thermal overload relay protection zone
B GV3L protection zone

Ref.
Motor circuit breakers

Curves

Current limitation on short-circuit for GV3L (3-phase 400/415 V)

Dynamic stress

I peak = f (prospective Isc) at 1.05 Ue = 435 V

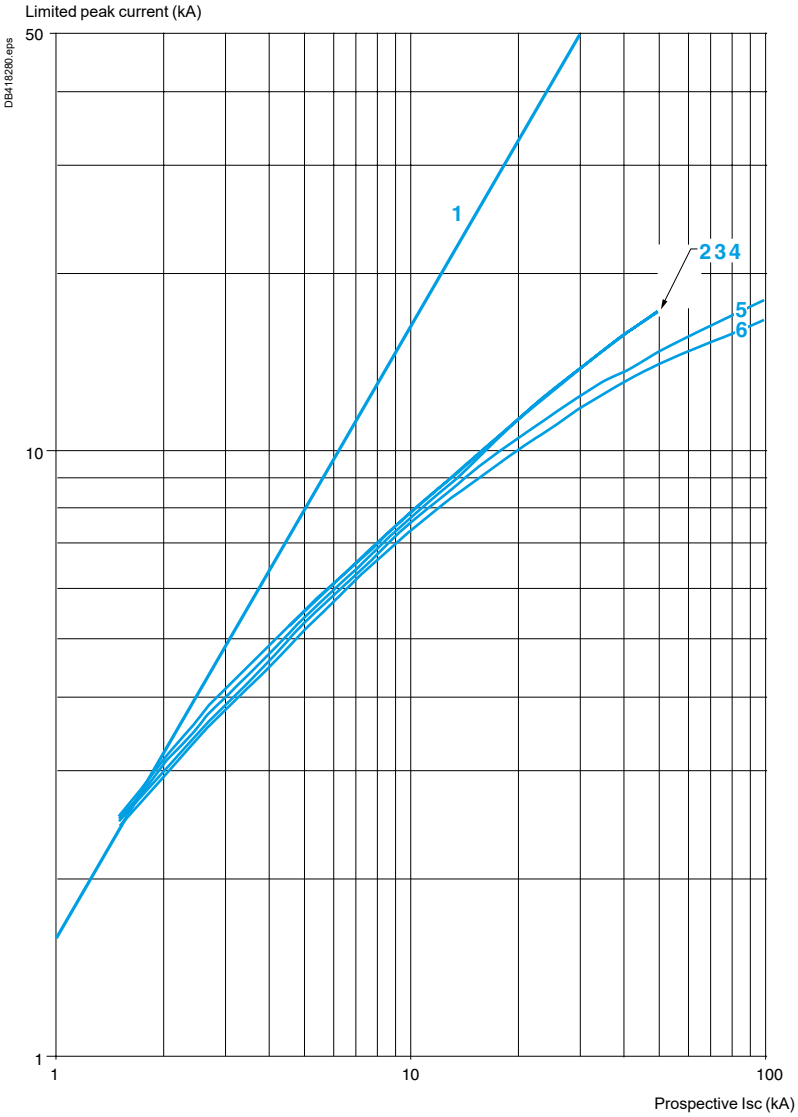

1 Maximum peak current
2 GV3L80 - GV3L73 - GV3L65
3 GV3L50
4 GV3L40
5 GV3L32
6 GV3L25

Ref.
Motor circuit breakers

Thermal limit on short-circuit for GV3L

Thermal limit in kA²S

Sum of I^2dt = f (prospective Isc) at 1.05 Ue = 435 V

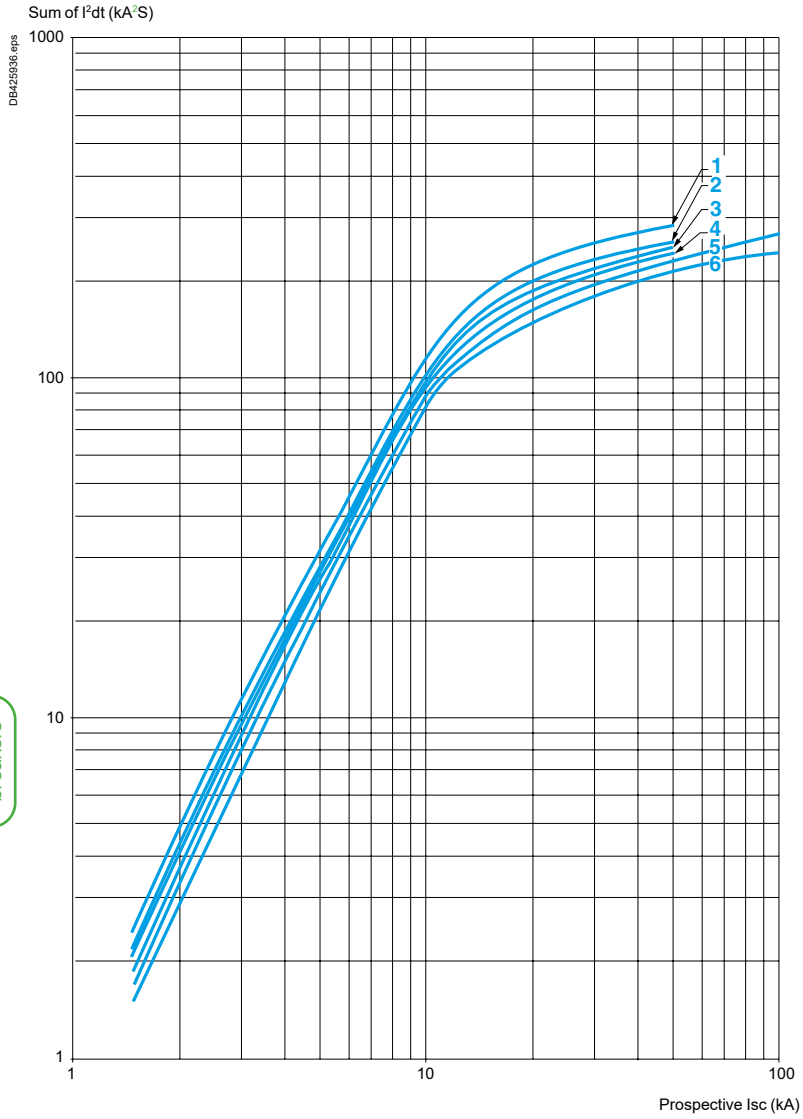

1 GV3L73 - GV3L80
2 GV3L65
3 GV3L50
4 GV3L40
5 GV3L32
6 GV3L25

Ref.
Motor circuit breakers

Thermal-magnetic tripping curves for GV3P

Average operating times at 20 °C related to multiples of the setting current

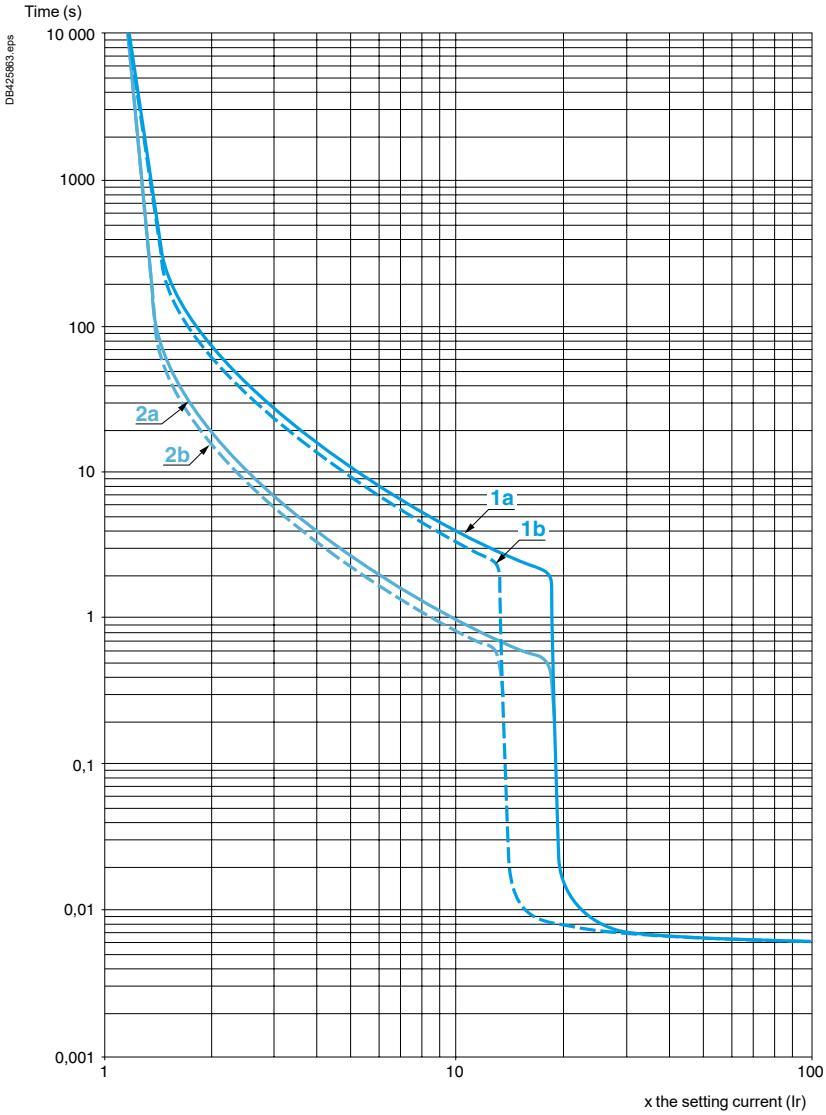

1a 3 poles from cold state (Ir mini.): GV3P
1b 3 poles from cold state (Ir maxi.): GV3P
2a 3 poles from hot state (Ir mini.): GV3P
2b 3 poles from hot state (Ir maxi.): GV3P

Ref.
Motor circuit breakers

Current limitation on short-circuit for GV3P (3-phase 400/415 V)

Dynamic stress

I peak = f (prospective Isc) at 1.05 Ue = 435 V

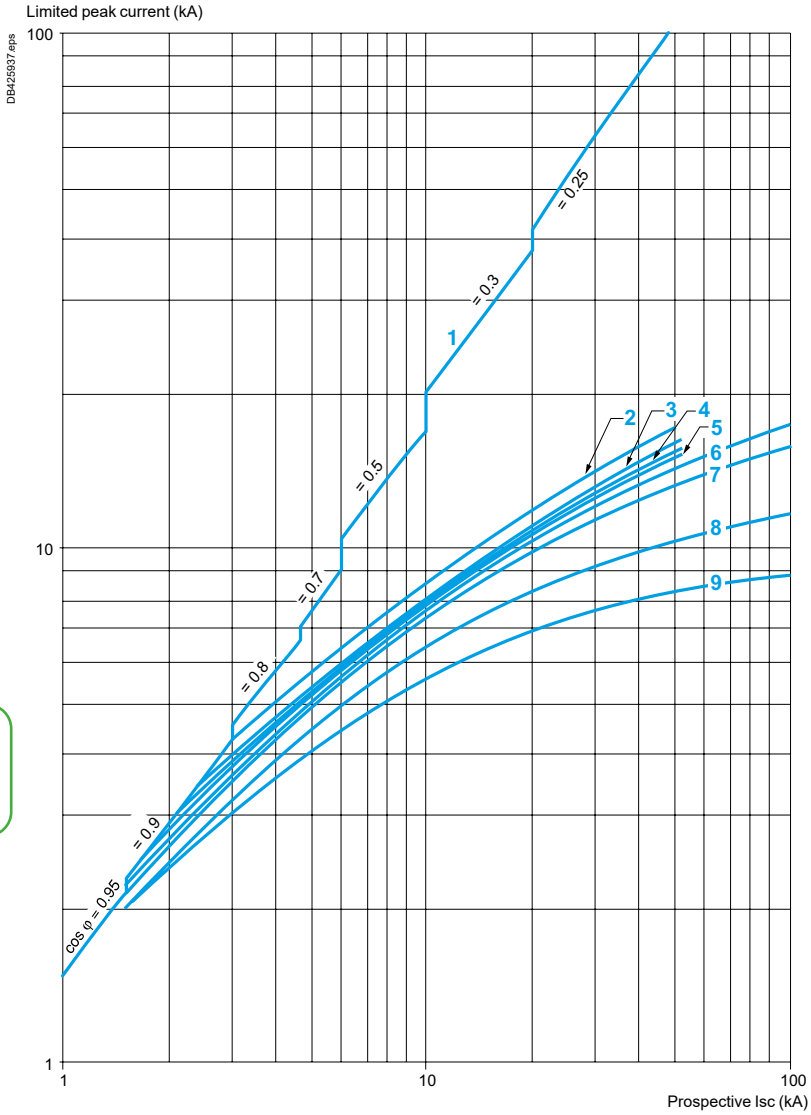

1 Maximum peak current
2 70-80 A (GV3P80); 62-73 A (GV3P73)
3 48-65 A (GV3P65)
4 37-50 A (GV3P50)
5 30-40 A (GV3P40)
6 23-32 A (GV3P32)
7 17-25 A (GV3P25)
8 12-18 A (GV3P18)
9 9-13 A (GV3P13)

Curves

Maximum thermal limit on short-circuit for GV3P

Thermal limit in kA²s in the magnetic operating zone

Sum of I²dt = f (prospective Isc) at 1.05 Ue = 435 V

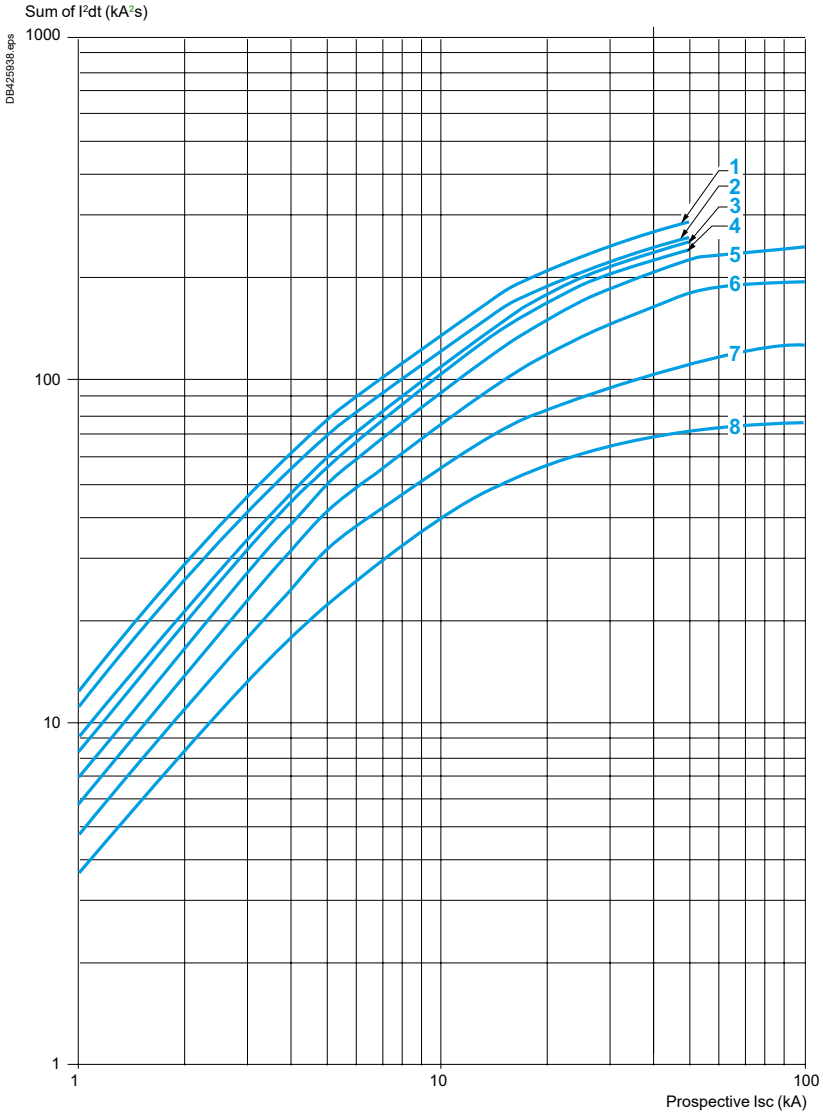

1 70-80 (GV3P80) - 62-73 (GV3P73)
2 48-65 A (GV3P65)
3 37-50 A (GV3P50)
4 30-40 A (GV3P40)
5 23-32 A (GV3P32)
6 17-25 A (GV3P25)
7 12-18 A (GV3P18)
8 9-13 A (GV3P13)

Ref.
Motor circuit breakers

Characteristics

Characteristics of GV3 electric trips

Type of trip			GVAU●●● MN undervoltage trip	GVAS●●● MX shunt trip
Rated insulation voltage (Ui)	Conforming to IEC 60947-1	**V**	690	690
	Conforming to CSA C22-2 n°14, UL 508	**V**	600	600
Operational voltage (Ue)	Conforming to IEC 60947-1	**V**	0.85...1.1 Uc	0.7...1.1 Uc
Drop-out voltage		**V**	0.7...0.35 Uc	0.75...0.2 Uc
Inrush consumption	~ ⎓	**VA**	12	14
Sealed consumption	~ ⎓	**VA**	3.5	5
Operating time	Conforming to IEC 60947-1	**ms**	From the moment the voltage reaches its operational value until opening of the circuit breaker. 10...15	
On-load factor			100 %	
Cabling (spring connection)	Number of conductors		2 or 4	
	Solid cable	**mm²**	1...2.5	
	Flexible cable without cable end	**mm²** **AWG**	0.75...2.5	
	Flexible cable with cable end	**mm²**	0.75...2.5	
Tightening torque		**N.m**	1.4 max	
Mechanical durability (C.O.: Close - Open)		**C.O.**	10000 (GV3P and GV3L)	

References: page B6/29
Dimensions: page B6/115
Schemes: page B6/117

Characteristics

Type of contacts			Instantaneous auxiliary GVAN, GVAD							Fault signalling GVAD, GVAM11 (1)				Instantaneous auxiliary GVAE			
Rated insulation voltage (Ui) (associated insulation coordination)	Conforming to IEC 60947-1	**V**	690							690				250 (690 in relation to main circuit)			
	Conforming to UL 60947-4-1, CSA C22.2 n° 60947-4-1	**V**	600							300				300			
Conventional thermal current (Ith)	Conforming to IEC 60947-5-1	**A**	6							2.5				2.5			
	Conforming to UL 60947-5-1, CSA C22.2 n° 60947-5-1	**A**	5							1				1			
Mechanical durability (C.O.: Close - Open)		**C.O.**	100 000							1000				100 000			
Operational power and current conforming to IEC 60947-5-1. a.c. operation			AC-15/100 000 C.O.							AC-14/1000 C.O.				AC-15/100 000 C.O.			
	Rated operational voltage (Ue)	**V**	**48**	**110 127**	**230 240**	**380 415**	**440**	**500**	**690**	**24**	**48**	**110 127**	**230 240**	**24**	**48**	**110 127**	**230 240**
Operation	Operational power, normal conditions	**VA**	300	500	720	850	650	500	400	36	48	72	72	48	60	120	120
	Occasional breaking and making capacities, abnormal conditions	**kVA**	3	7	13	15	13	12	9	0.22	0.3	0.45	0.45	0.48	0.6	1.27	2.4
	Rated operational current (Ie)	**A**	6	4.5	3.3	2.2	1.5	1	0.6	1.5	1	0.5	0.3	2	1.25	1	0.5
Operational power and current conforming to IEC 60947-5-1. d.c.			DC-13/100 000 C.O.							DC-13/1000 C.O.				DC-13/100 000 C.O.			
	Rated operational voltage (Ue)	**V**	**24**	**48**	**60**	**110**	**240** (2)	**–**	**–**	**24**	**48**	**60**	**–**	**24**	**48**	**60**	**–**
Operation	Operational power, normal conditions	**W**	140	240	180	140	120	–	–	24	15	9	–	24	15	9	–
	Occasional breaking and making capacities, abnormal conditions	**W**	240	360	240	210	180	–	–	100	50	50	–	100	50	50	–
	Rated operational current (Ie)	**A**	6	5	3	1.3	0.5	–	–	1	0.3	0.15	–	1	0.3	0.15	–
Low power switching reliability of contact			**GVAE**: Number of failures for "n" million operating cycles (17 V-5 mA): = 10^{-6}														
Minimum operational conditions d.c. operation		**V**	17														
		mA	5														
Short-circuit protection			By **GB2CB●●** circuit breaker (rating according to operational current for Ue ⩽ 415 V) or by gG fuse 10 A max											**GB2CB06** or gG fuse 10 A max			
Cabling, screw clamp terminals	Number of conductors		**1**			**2**											
	Solid cable	**mm²**	1…2.5			1…2.5											
	Flexible cable without cable end	**mm²**	0.75…2.5			0.75…2.5											
	Flexible cable with cable end	**mm²**	0.75…1.5			0.75…1.5											
	Tightening torque	**N.m**	1.4 max			1.4 max											
Cabling, spring terminal connections			**GVAN** only														
	Flexible cable without cable end	**mm²**	0.75…2.5			0.75…2.5				–				0.75…1.5			

Operation of instantaneous auxiliary contacts

Operation of fault signalling contacts

GVAM11
Change of state following tripping on short-circuit.

GVAD10●● and **GVAD01●●**
Change of state following tripping on short-circuit, overload or undervoltage.

(1) For application example of fault signalling contact and short-circuit signalling contact.
*(2) Add an RC circuit type **LA4D** to the load terminals.*

References: page B6/29
Dimensions: page B6/115
Schemes: page B6/117

Characteristics

Characteristics of 3-pole busbars GV3G●●●

			GV3G●64
Rated insulation voltage (Ui)	Conforming to IEC 60947-1	**V**	690
Conventional thermal current (Ith)	Conforming to IEC 60439-1	**A**	115
Rated operational current (Ie)		**A**	115
Permissible peak current (I peak)		**kA**	20
Permissible thermal limit (I^2t)		**kA^2s**	300
Degree of protection	Conforming to IEC 60529		IP 20
Terminal block			–

References:
page B6/29
Dimensions:
page B6/115

Dimensions and mounting

GV3L, GV3P

Dimensions

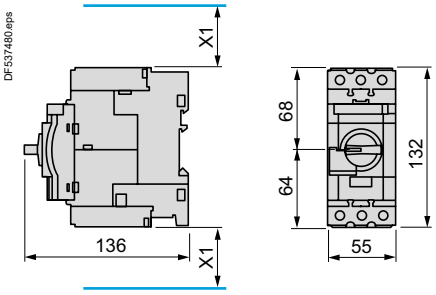

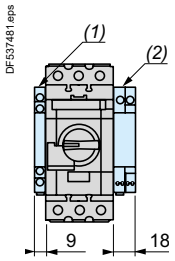

X1 = Electrical clearance (ISC max)
40 mm for Ue ≤ 500 V, 50 mm for Ue ≤ 690 V

*(1) Blocks **GVAN●●**, **GVAD●●** and **GVAM11**.*
*(2) Blocks **GV3AU●●** and **GV3AS●●**.*

***Note:** Leave a space of 9 mm between 2 circuit breakers: either an empty space or side-mounting add-on contact blocks.*
Side by side mounting is possible up to 40 °C.

Mounting

Mounting with contactor LC1D40A…D80A and relay LR3D313…380 (1) (2) (3)

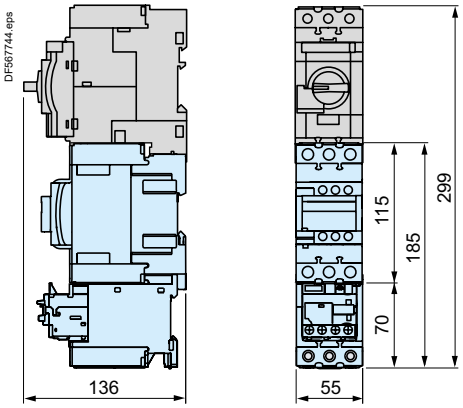

Side by side mounting with contactor LC1D40A…D73A (S-shape busbar system GV3S (1)**)**

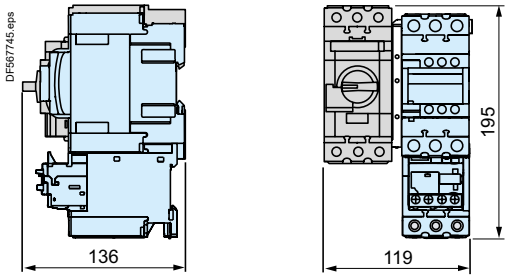

*(1) Mountings with c.b. up to **GV3L73**, **GV3P73**.*
*(2) For **GV3L80**, **GV3P80** use cable between components for dissipating heat. Consult online datasheets for values*
(3) S-shape busbar system suitable up to 73 A.

Mounting on rail AM1DE200 or AM1ED201

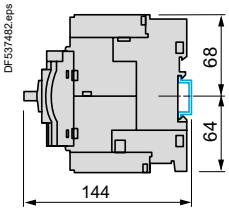

Panel mounting, using M4 screws

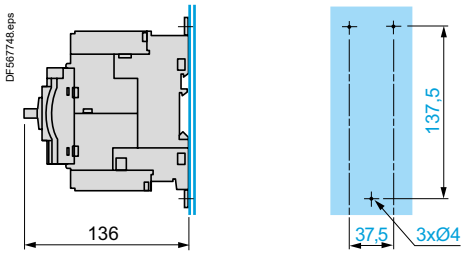

Mounting on pre-slotted plate AM1PA

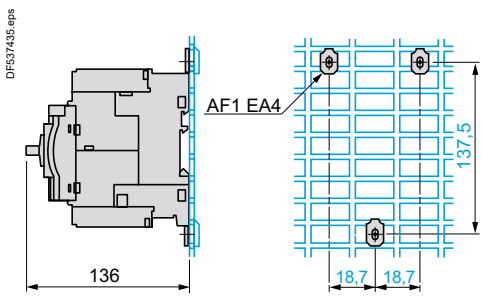

Set of busbars GV3G264

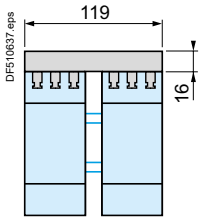

Set of busbars GV3G364

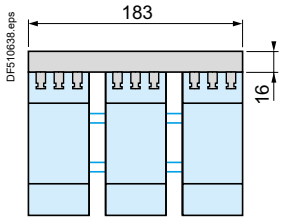

References:
pages B6/26 and B6/27

Characteristics:
pages B6/102 to B6/105

Curves:
pages B6/106 to B6/111

Schemes:
page B6/117

Dimensions and mounting

Mounting

Mounting of external operator GV3APN01, GV3APN02 or GV3APN04 for motor circuit breakers GV3L

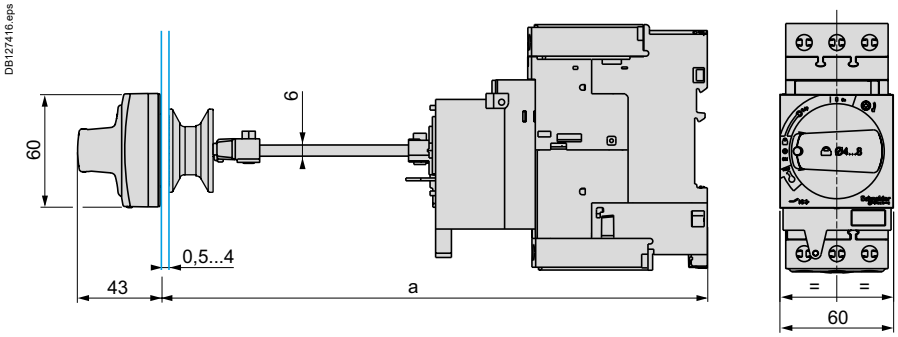

Door cut-out

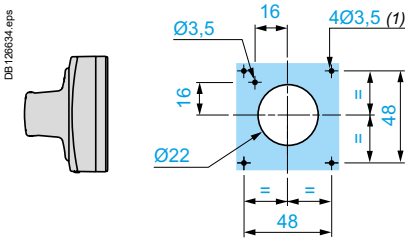

(1) For IP65 only.

	a		b	
	Mini	**Maxi**	**Mini**	**Maxi**
GV3APN●●	189	300	-	-
GV3APN●● + GVAPK12	300	481		

Ref.

Motor circuit breakers

References:
page B6/30

Life Is On Schneider Electric

Schemes

Schemes

GV3L●●

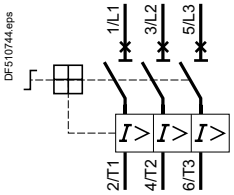

GV3P●●

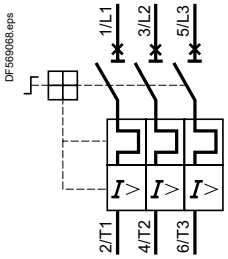

Front mounting add-on contact blocks
Instantaneous auxiliary contacts

GVAE1

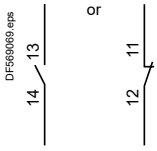

GVAE11

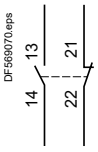

GVAE20

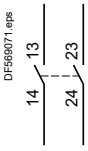

Front mounting add-on contact blocks
Instantaneous auxiliary contacts and fault signalling contacts

GVAED101

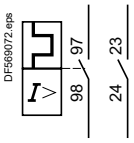

GVAED011

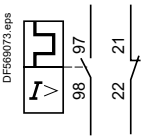

Side mounting add-on contact blocks
Instantaneous auxiliary contacts and fault signalling contacts

GVAD0110

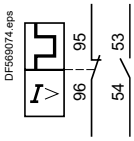

GVAD0101

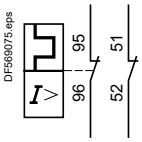

GVAD1010

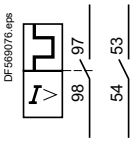

GVAD1001

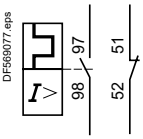

Instantaneous auxiliary contacts

GVAN11

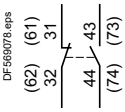

GVAN20

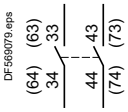

Short-circuit signalling contacts

GVAM11

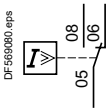

Voltage trips

GVAU●●●

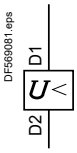

GVAS●●●

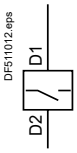

GVAX●●●

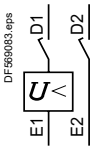

Current limiter

GV1L3

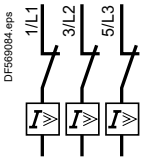

Use of fault signalling contact and short-circuit signalling contact

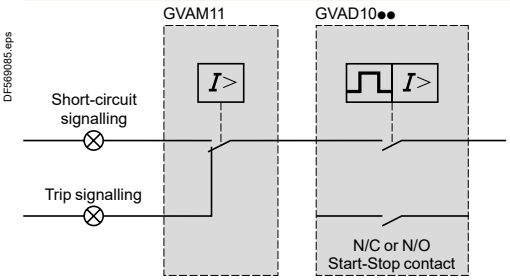

Start-Stop signalling contact blocks

GK2AX10

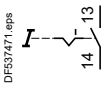

GK2AX20

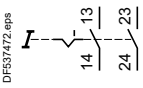

GK2AX50

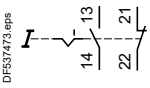

Fault signalling contact blocks

GK2AX52

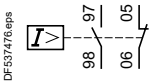

References:
pages B6/26 to B6/29

Characteristics:
pages B6/102 to B6/105

Curves:
pages B6/106 to B6/111

Dimensions:
page B6/115

TeSys Deca - Frame 4

0.25 to 55 kW - 1/2 to 60 HP

Environment

Circuit breaker type				GV4L	GV4LE	GV4P	GV4PE	GV4PEM	GV4PB
Conforming to standards				IEC/EN 60947-1, IEC/EN 60947-2, IEC/EN 60947-4-1		IEC/EN 60947-1, IEC/EN 60947-2, IEC/EN 60947-4-1, UL 60497-4-1, CSA 22.2 n° 60497-4-1			IEC/EN 60947-2, IEC/EN 60947-4-1
Product certifications				CCC, EAC, BV, EU-RO MR (1), UKCA		CCC, EAC, CSA (cCSAus), ATEX, BV, EU-RO MR (1), UKCA			UL 489, CSA C22.2 n°5
Climatic withstand				According to IACS E10					
Degree of protection (front face)	Conforming to IEC 60529	Open mounted		IP 40 front face except on connection area. Connection area: - IP20 with EverLink connector - IP40 with crimp lug connector and terminal shield.					
		In enclosure (2)		DRH = IP40 ERH = IP54 or IP65					
Shock resistance	Conforming to IEC 60068-2-27			15g - 11 ms		15g - 11 ms			
Vibration resistance	Conforming to IEC 60068-2-6			2.0 to 13.2 Hz and amplitude ±1 mm 13.2 to 100 Hz acceleration 0.7 g					
Ambient air temperature	Storage		°C	-50…+85					
	Operation		°C	-25…+70					
Temperature compensation			°C	Non applicable		-25…+60 (3)			
Flame resistance	Conforming to IEC 60695-2-11		°C	960					
Maximum operating altitude			m	2000 without derating. Up to 5000 with derating					
Suitable for isolation	Conforming to IEC 60947-1 § 7-1-6			Yes					
Resistance to mechanical impact			J	IK07 (2J)					
Sensitivity to phase failure				No		Yes			

Technical characteristics

Utilisation category	Conforming to IEC 60947-2		A	A
	Conforming to IEC 60947-4-1		AC-3 (4)	
Rated operational voltage (Ue)	Conforming to IEC 60947-2	V	690	
Rated insulation voltage (Ui)	Conforming to IEC 60947-2	V	800	
Rated voltage	Conforming to CSA C22-2 n°1, UL 60947-4-1	V	Non applicable	600
Rated operational frequency	Conforming to IEC 60947-4-1, UL, CSA	Hz	50/60	
Rated impulse withstand voltage (U imp)	Conforming to IEC 60947-2	kV	8	
Total power dissipated per pole		W	6.1	4.6
Mechanical durability (C.O.: Closing, Opening)		C.O.	40000	
Electrical durability for AC-3/415V duty (C.O.: Closing, Opening)	415 V In	C.O.	5 000	
Duty class (maximum operating rate)		C.O./h	25	
Maximum conventional rated thermal current (Ith)	Conforming to IEC 60947-4-1	A	115	
Rated duty	Conforming to IEC 60947-4-1		Continuous duty	

(1) Refer to chapter on page A5/132 for details on Marine Classification Societies.
(2) DRH = with Direct Rotary Handle
ERH = with Extended Rotary Handle.
(3) For operation up to 70 °C, please consult your regional sales office.
(4) Up to 100 A.

Ref.
Motor circuit breakers

Mounting characteristics

Operating position
Without derating, in relation to normal vertical mounting plane [(1)]

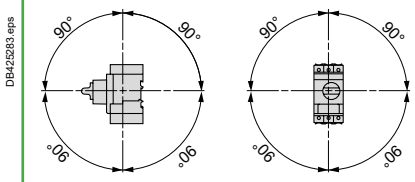

Power connection characteristics

Power connection by bare cables (EverLink connector)

Bare cables

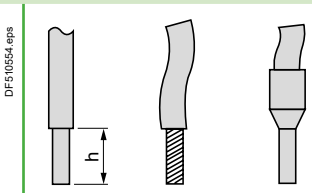

			Min.	Max.
Connection to screw clamp terminals (Max. number of conductors x c.s.a.)	Solid cable	**mm²** **AWG**	Cu 1 x 1.5 + 1 x 2.5 Cu 2 x 14	Cu 1 x 70 + 1 x 95 Cu 1 x 2/0 + 1 x 3/0
	Flexible cable without cable end	**mm²** **AWG**	Cu 1 x 1.5 + 1 x 2.5 Cu 2 x 6	Cu 1 x 50 + 1 x 70 Cu 1 x 1/0 + 1 x 2/0
	Flexible cable with cable end	**mm²** **AWG**	Cu 1 x 1.5 + 1 x 2.5 Cu 2 x 6	Cu 1 x 50 + 1 x 70 Cu 1 x 1/0 + 1 x 2/0
Tightening torque		**N.m**	5 ⩽ 10 mm² / 8 AWG 9 ⩾ 16 mm² / 6 AWG	
Stripping length (h)	Solid cable	**mm**	20	

Power connection by bars or lugs

Bars or lugs

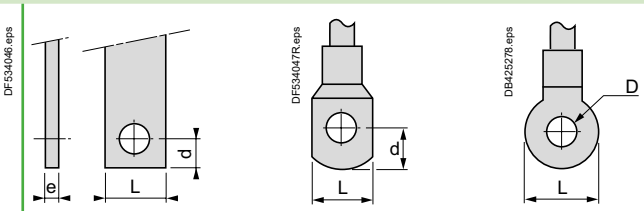

Pitch	Without spreaders	**mm**	27
	With spreaders	**mm**	35
Bars or cables with lugs	e	**mm**	⩽ 8
	L	**mm**	⩽ 20
	d	**mm**	⩽ 7
	D	**mm**	6.4
M6 Screws	Tightening torque	**N.m**	5 ⩽ 10 mm² / 8 AWG 9 ⩾ 16 mm² / 6 AWG

(1) When mounting on a vertical rail, fit a stop to prevent any slippage.

Ref.
Motor circuit breakers

Characteristics

Breaking capacity of GV4L and GV4LE

Circuit breaker type				GV4L●●●B GV4LE●●●B				GV4L●●●N GV4LE●●●N								GV4LE●●●S							
Rating			**A**	**25**	**50**	**80**	**115**	**2**	**3.5**	**7**	**12.5**	**25**	**50**	**80**	**115**	**2**	**3.5**	**7**	**12.5**	**25**	**50**	**80**	**115**
Breaking capacity conforming to IEC 60947-2	230/240 V	Icu	**kA**	50				100								120							
		Ics % (1)		100				100								100							
	400/415 V	Icu	**kA**	25				50								100							
		Ics % (1)		100				100								100							
	440 V	Icu	**kA**	20				50								70							
		Ics % (1)		100				100								100							
	500 V	Icu	**kA**	10				25								30							
		Ics % (1)		100				100								100							
	525 V	Icu	**kA**	-				15								18							
		Ics % (1)		-				100								100							
	690 V	Icu	**kA**	-				8								10							
		Ics % (1)		-				25								25							

(1) As % of Icu.

Characteristics

Breaking capacity of GV4P, GV4PE, GV4PB●●●B

Circuit breaker type				GV4P●●●B GV4PE●●●B GV4PEM●●●B GV4PB●●●B				GV4P●●●N GV4PE●●●N GV4PEM●●●N GV4PB●●●N								GV4P●●●S GV4PE●●●S GV4PEM●●●S GV4PB●●●S							
Rating			A	25	50	80	115	2	3.5	7	12.5	25	50	80	115	2	3.5	7	12.5	25	50	80	115
Breaking capacity conforming to IEC 60947-2	230/240 V	Icu	kA	50				100								120							
		Ics % (1)		100				100								100							
	400/415 V	Icu	kA	25				50								100							
		Ics % (1)		100				100								100							
	440 V	Icu	kA	20				50								70							
		Ics % (1)		100				100								100							
	500 V	Icu	kA	10				25								30							
		Ics % (1)		100				100								100							
	525 V	Icu	kA	-				15								18							
		Ics % (1)		-				100								100							
	690 V	Icu	kA	-				8								10							
		Ics % (1)		-				25								25							
Breaking capacity conforming to UL 60947-4-1 and CSA 22.2 n° 60947-4-1	120 V		kA	35				65								100							
	208 V		kA	35				65								100							
	240 V		kA	35				65								100							
	480Y / 277 V		kA	18				35								65							
	480 V (2)		kA	18				35								65							
	600Y / 347 V		kA	14				18								25							
	600 V (2)		kA	14				18								25							

(1) As % of Icu.
(2) Except for MCC suitable for TAP conductor protection, in motor group installation and GV4PB.

References:
pages B6/37 to B6/41
Curves:
pages B6/129 to B6/131
Dimensions, schemes:
pages B6/134 to B6/137

Curves

Tripping curves for GV4L and GV4LE combined with thermal overload relay LRD or LR9

Average operating times at 20 ° C related to multiples of the setting current

GV4L02 and GV4LE02 to 12 with LRD05 to LRD14, GV4L80 and GV4LE80 with LRD3363

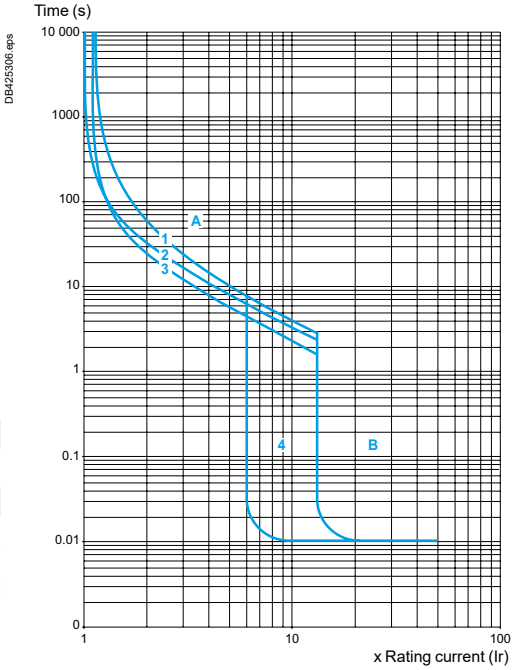

1 3 poles from cold state
2 2 poles from cold state
3 3 poles from hot state
4 6 ...14 Ir

A Thermal overload relay protection zone
B GV4L protection zone

GV4L25 AND GV4LE25 with LRD318, LRD325 GV4L50 AND GV4LE50 with LRD332, LRD340, LRD350

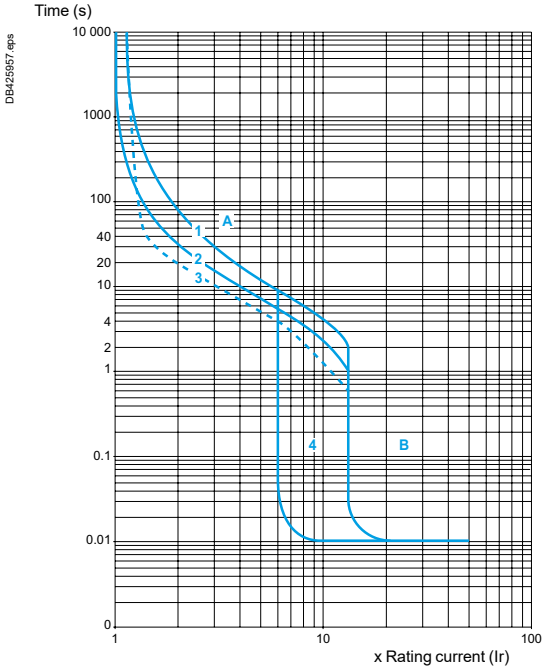

1 3 poles from cold state
2 2 poles from cold state
3 3 poles from hot state
4 6 ...14 Ir

A Thermal overload relay protection zone
B GV4L protection zone

GV4L115 and GV4LE115 with class 10 LR9F5367, LR9D5369 and class 20 LR9D5567, LR9F5569

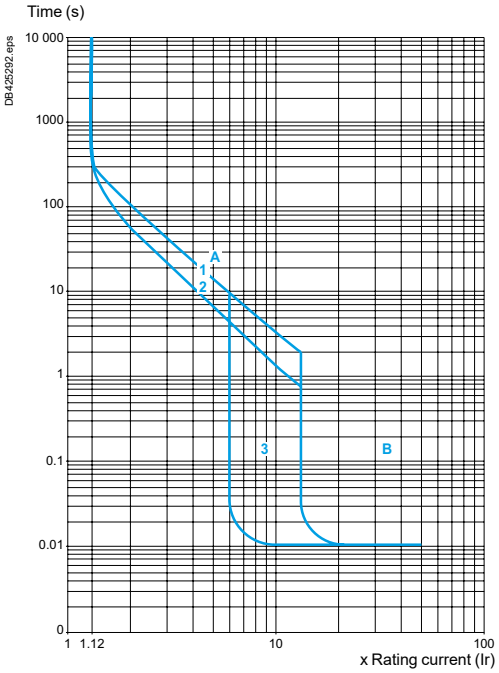

1 Cold state curve
2 Hot state curve
3 6 ...14 Ir

Ref.
Motor circuit breakers

Current limitation on short-circuit for GV4L, GV4LE (3-phase 400/415 V)

Dynamic stress

I peak = f (prospective Isc) at 1.05 Ue = 435 V

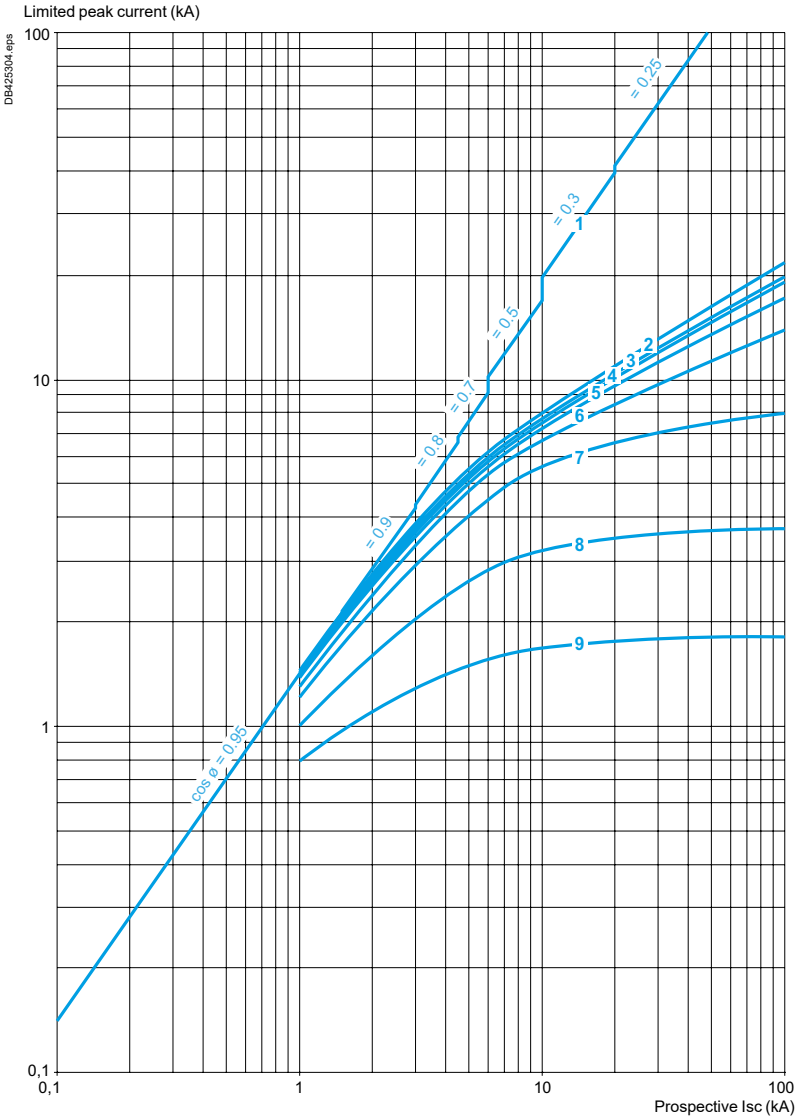

1 Maximum peak current
2 GV4L115
3 GV4L80
4 GV4L50
5 GV4L25
6 GV4L12
7 GV4L07
8 GV4L03
9 GV4L02

Ref.
Motor circuit breakers

Current limitation on short-circuit for GV4L, GV4LE + thermal overload relay LRD or LR9 (3-phase 400/415 V)

Dynamic stress

I peak = f (prospective Isc) at 1.05 Ue = 435 V

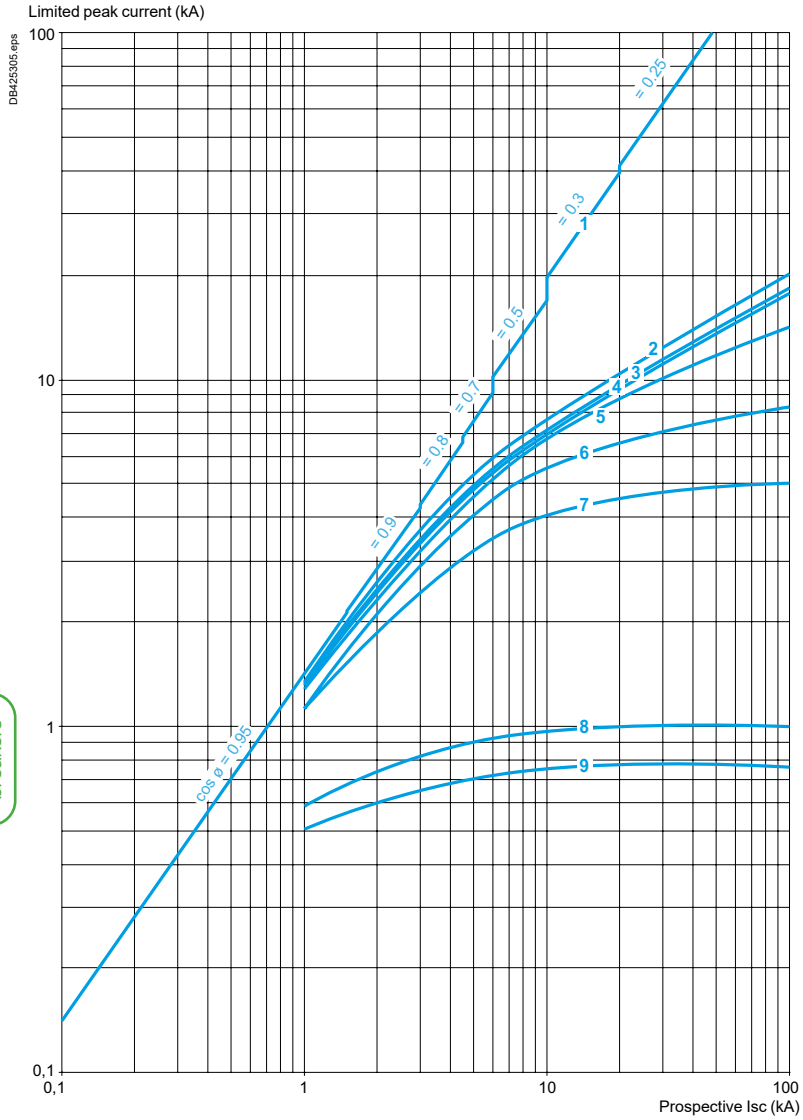

1 Maximum peak current
2 GV4L115 + LR9D5367 or LR9F5367
3 GV4L80 + LRD3361
4 GV4L50 + LRD340
5 GV4L25 + LRD325
6 GV4L12 + LRD313
7 GV4L07 + LRD12
8 GV4L03 + LRD07
9 GV4L02 + LRD07

Curves

Thermal limit on short-circuit for GV4L, GV4LE

Thermal limit in kA²S

Sum of kA²S = f (prospective Isc) at 1.05 Ue = 435 V

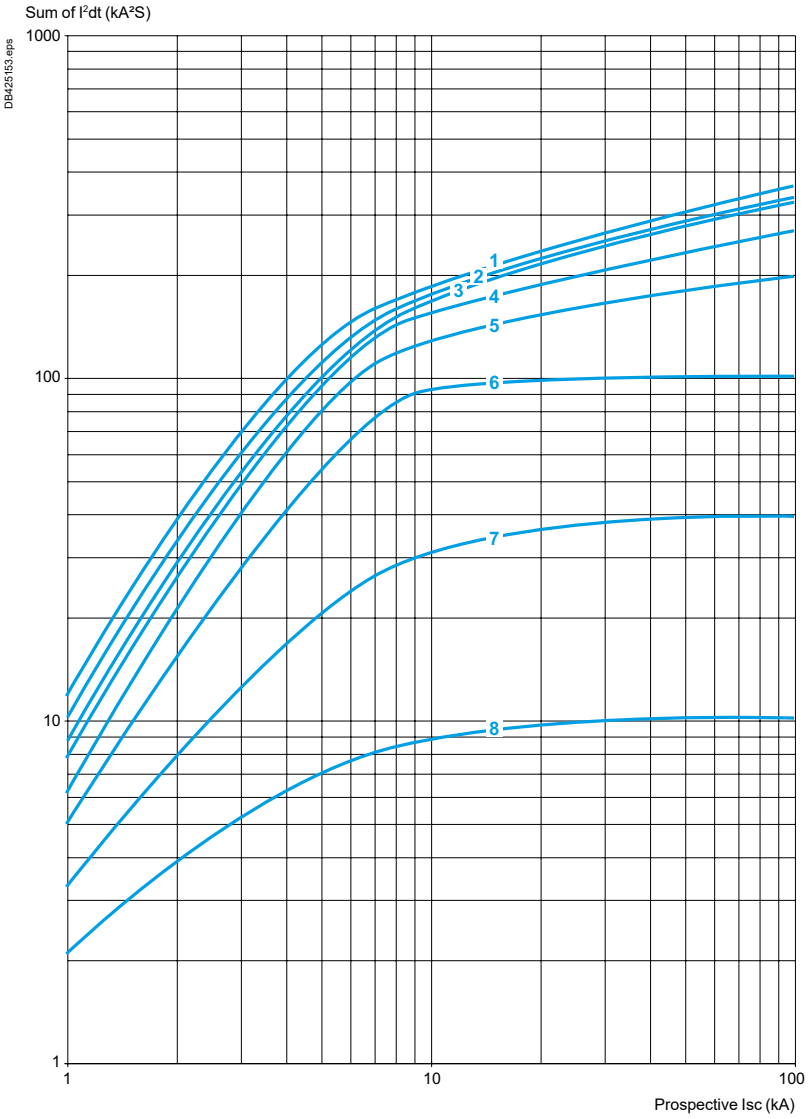

1 GV4L115
2 GV4L80
3 GV4L50
4 GV4L25
5 GV4L12
6 GV4L07
7 GV4L03
8 GV4L02

Ref.
Motor circuit breakers

Curves

Thermal limit on short-circuit for GV4L, GV4LE + thermal overload relay LRD or LR9

Thermal limit in kA²S in the magnetic operating zone

Sum of kA²S = f (prospective Isc) at 1.05 Ue = 435 V

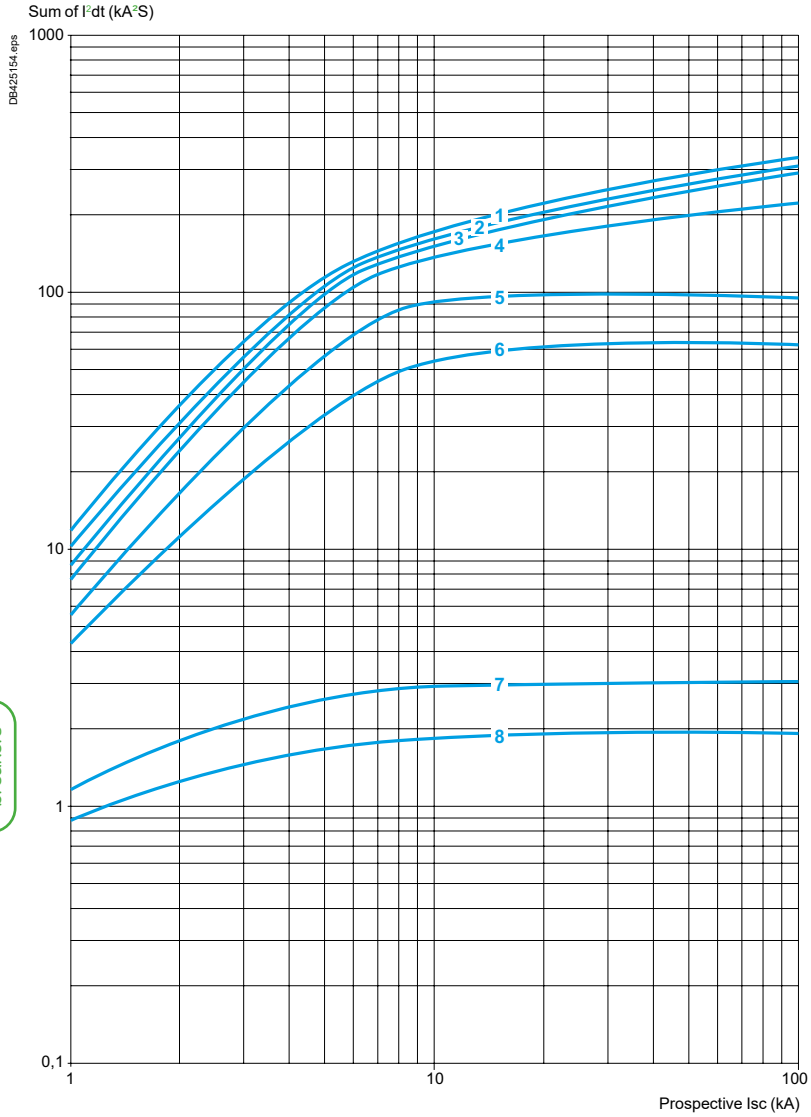

1 GV4L115 + LR9D5367 or LR9F5367
2 GV4L80 + LRD3361
3 GV4L50 + LRD340
4 GV4L25 + LRD325
5 GV4L12 + LRD313
6 GV4L07+ LRD12
7 GV4L03+ LRD07
8 GV4L02 + LRD07

Ref.
Motor circuit breakers

Thermal-magnetic tripping curves for GV4P, GV4PE, GV4PEM, GV4PB

Average operating times at 20 °C related to multiples of the setting current

GV4P, GV4PE, GV4PEM

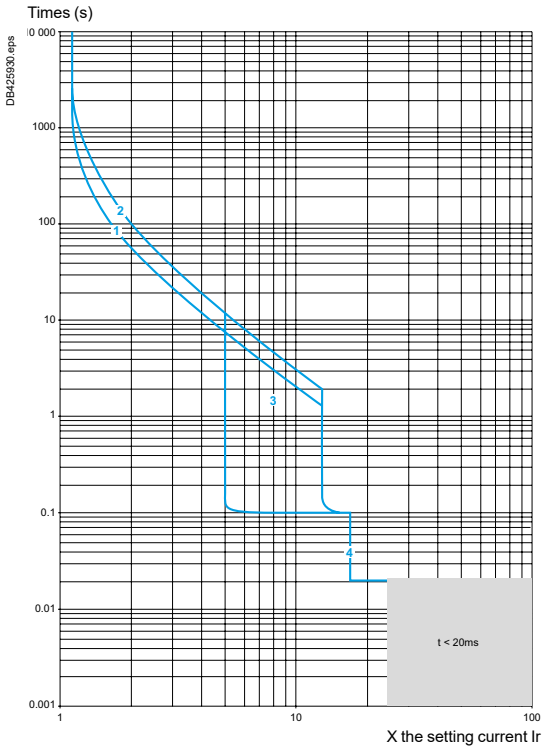

GV4P, GV4PE, GV4PEM

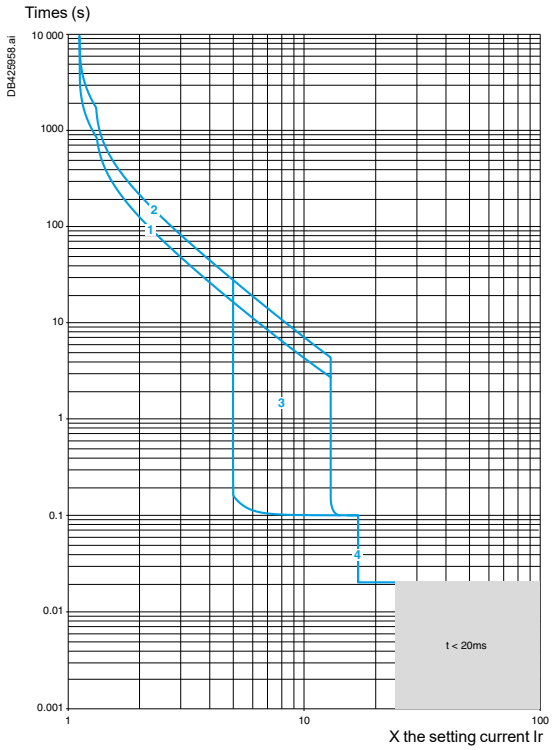

GV4PB

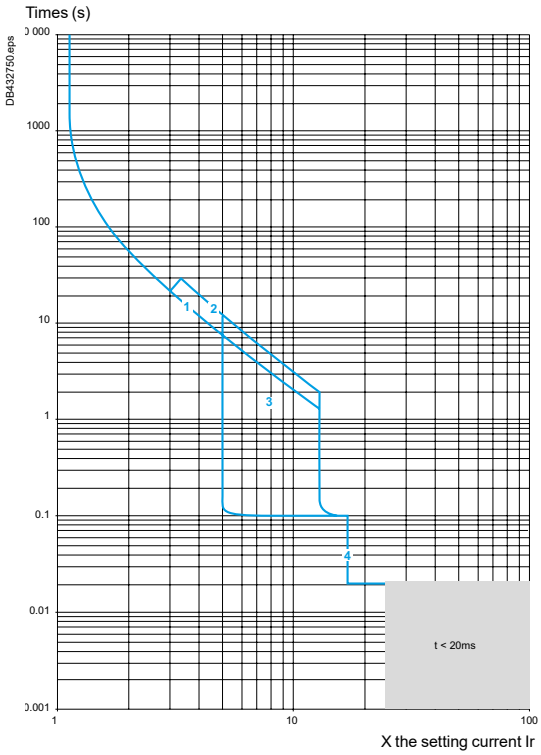

GV4PB

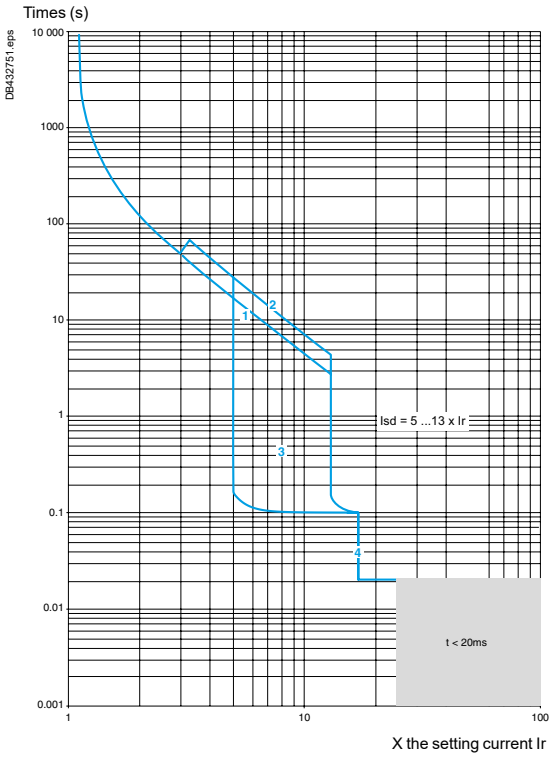

Hot state

1 Class 10
2 Class 20
3 Isd = 13 x Ir (GV4P - GV4PE); Isd = 5….13 x Ir (GV4PEM - GV4PB)
4 Ii = 17 In

Cold state

1 Class 10
2 Class 20
3 Isd = 13 x Ir (GV4P - GV4PE); Isd = 5…. 13 x Ir (GV4PEM - GV4PB)
4 Ii = 17 In

References:
pages B6/37 to B6/41

Characteristics:
pages B6/120 to B6/123

Dimensions, schemes:
pages B6/134 to B6/137

Current limitation on short-circuit for GV4P, GV4PE, GV4PEM, GV4PB (3-phase 400/415 V)

Dynamic stress

I peak = f (prospective Isc) at 1.05 Ue = 435 V

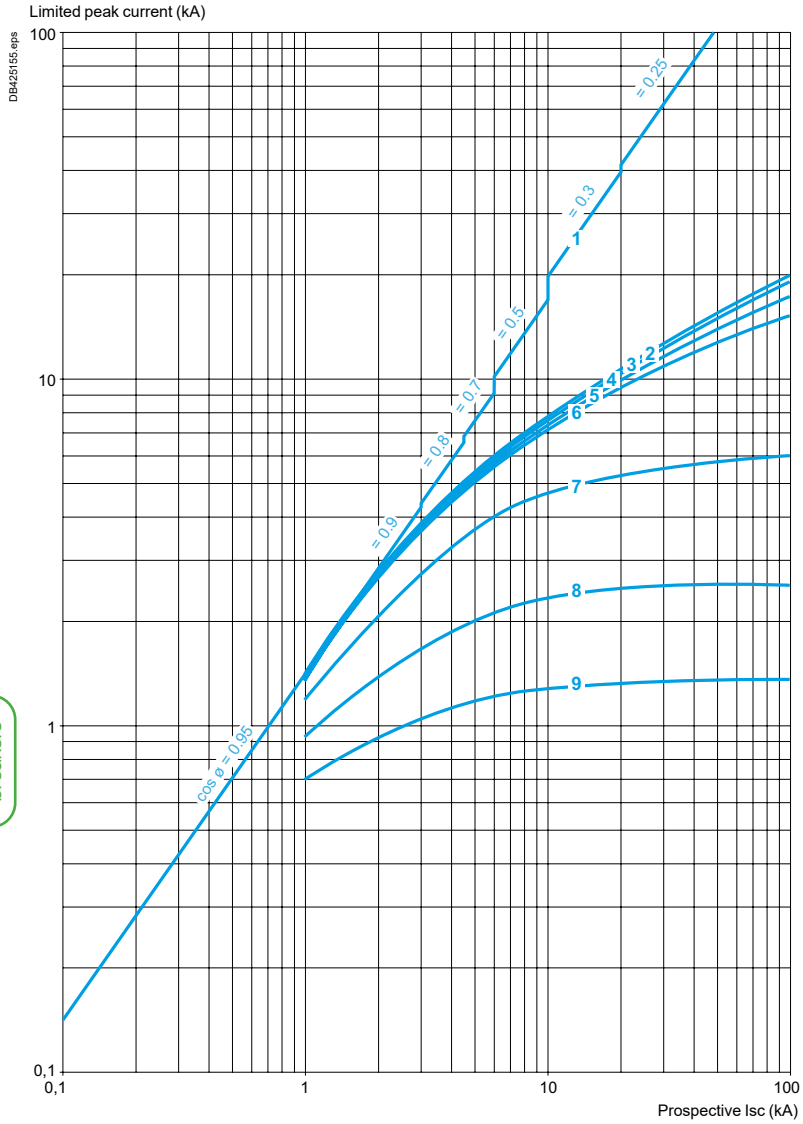

1 Maximum peak current
2 GV4P115
3 GV4P80
4 GV4P50
5 GV4P25
6 GV4P12
7 GV4P07
8 GV4P03
9 GV4P02

Ref.
Motor circuit breakers

Thermal limit on short-circuit for GV4P, GV4PE, GV4PEM, GV4PB

Thermal limit in kA²s in the magnetic operating zone

Sum of I^2dt = f (prospective Isc) at 1.05 Ue = 435 V

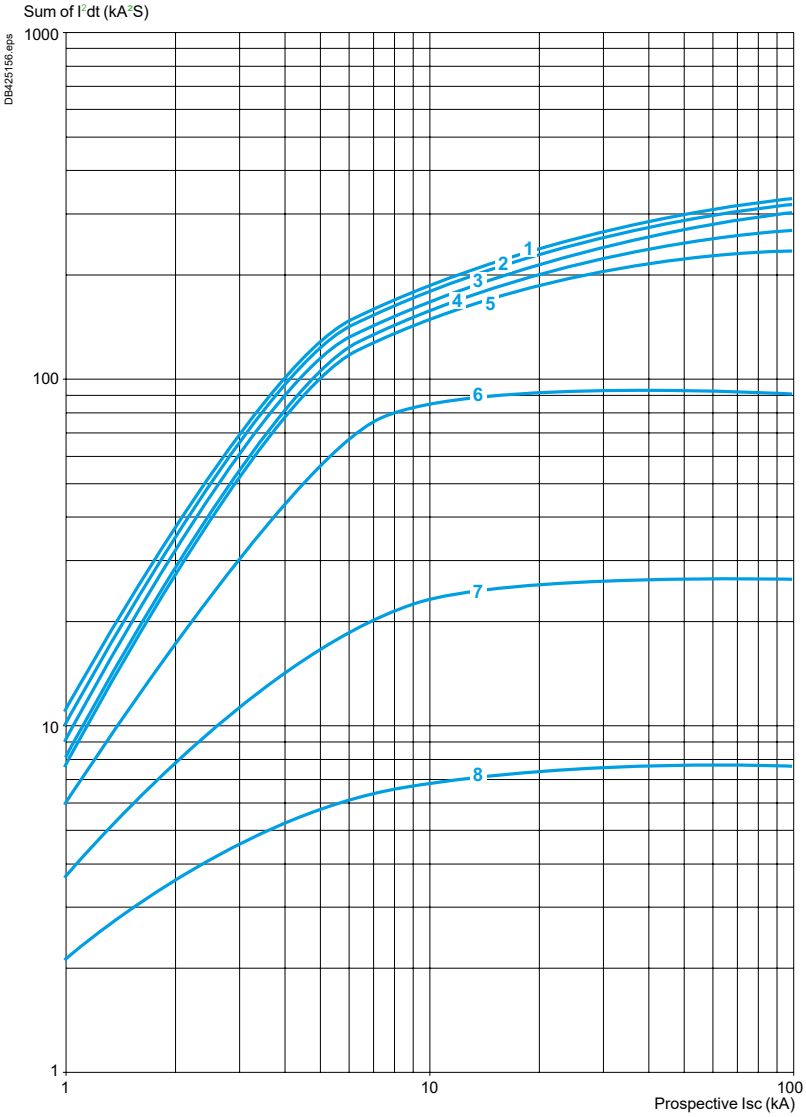

1 GV4P115
2 GV4P80
3 GV4P50
4 GV4P25
5 GV4P12
6 GV4P07
7 GV4P03
8 GV4P02

Ref.
Motor circuit breakers

Characteristics

Characteristics of electric trips

Type of trip			GV4AU●●● MN (undervoltage release)						
Rated insulation voltage (Ui)	Conforming to IEC 60947-1	V	= Ue						
Operational voltage (Ue)	Conforming to IEC 60947-1	V	24 V AC/DC	48 V AC/DC	110-130 V AC 125 V DC	208-240 V 60 Hz 220-240 V 50 Hz	277 V 60 Hz	380-415 V 60 Hz	440-480 V 60 Hz
Inrush consumption	~ ⎓	VA	< 7 VA < 2 W	< 7 VA < 2 W	< 7 VA < 2 W	< 7 VA	< 7 VA	< 7 VA	< 7 VA
Sealed consumption	~ ⎓	VA	< 7 VA < 2 W	< 7 VA < 2 W	< 7 VA < 2 W	< 7 VA	< 7 VA	< 7 VA	< 7 VA
Operating time	Conforming to IEC 60947-1	ms	< 50						
On-load factor			100 %						
Cabling (spring connection)	Number of conductors		1 per terminal						
	Solid cable	mm²	No solid cable allowed						
	Flexible cable without cable end	mm² AWG	Cu 0.5 mm² to 1.5 mm² Cu 20AWG to 16AWG						
	Flexible cable with cable end	mm²	No cable with cable end allowed						
Tightening torque		N.m	NA						
Mechanical durability (C.O.: Close - Open)		C.O.	20000						

Characteristics of electric trips

Type of trip			GV4AS●●● MX (Shunt trip)				
Rated insulation voltage (Ui)	Conforming to IEC 60947-1	V	= Ue				
Operational voltage (Ue)	Conforming to IEC 60947-1	V	24 V AC/DC	48 V AC/DC	110-130 V AC 125 V DC	208-240 V 60 Hz 220-240 V 50 Hz	380-415 V 50 Hz 440-480 V 60 Hz
Inrush consumption	~ ⎓	VA	< 6 VA < 10 W	< 6 VA < 10 W	< 6 VA < 10 W	< 6 VA	< 6 VA
Sealed consumption	~ ⎓	VA	< 4 VA < 1 W	< 4 VA < 1 W	< 4 VA < 1 W	< 4 VA	< 4 VA
Operating time	Conforming to IEC 60947-1	ms	< 50				
On-load factor			100 %				
Cabling (spring connection)	Number of conductors		1 per terminal				
	Solid cable	mm²	No solid cable allowed				
	Flexible cable without cable end	mm² AWG	Cu 0.5 mm² to 1.5 mm² Cu 20AWG to 16AWG				
	Flexible cable with cable end	mm²	No cable with cable end allowed				
Tightening torque		N.m	NA				
Mechanical durability (C.O.: Close - Open)		C.O.	20000				

References:
page B6/43

Life Is On Schneider Electric

Characteristics

Auxiliary contact characteristics

Type of contacts				Auxiliary contact block GV4AE11						SDx contact module for GV4PEM , GV4PB, GV4ADM1111					
Rated insulation voltage(Ui)	Conforming to IEC 60947-1		**V**	690						250					
	Conforming to CSA C22-2 n°14 UL 508		**V**	-						-					
Conventional thermal current (Ith)	Conforming to IEC 60947-5-1		**A**	5						5					
	Conforming to CSA C22-2 n°14 UL 508		**A**	5						5					
Mechanical durability (C.O.: Close - Open)			**C.O.**	40 000						100 000					
Operational power and current conforming to IEC 60947-5-1 a.c. operation	**Rated operational voltage (Ue)**		**V**	**24**	**48**	**110/ 127**	**230/ 240**	**380/ 440**	**660/ 690**	**48**	**110**	**230/ 240**	**380/ 415**	**440**	**690**
	Operational power (AC12)		**VA**	120	240	635	1200	2200	3450			400			
	Occasional breaking and making capacities		**kVA**	1.2	2.4	6.35	12	22	34.5						
	Operational current (Ie)	AC-12	**A**	5	5	5	5	5	5						
		AC-15	**A**	5	5	4	3	2.5	0.1		3	1.5			
Operational power and current conforming to IEC 60947-5-1 d.c. operation	**Rated operational voltage (Ue)**		**V**	**24**	**48**	**110**	**250**			**24**	**48**	**60**	**110**	**250**	
	Operational power (DC12)		**W**	120	120	66	75			50					
	Occasional breaking and making capacities		**W**	1200	1200	660	750								
	Rated operational current (Ie)	DC-12	**A**	5	2.5	0.6	0.3								
		DC-13	**A**	2.5	1.2	0.35	0.05			2			0.22	0.11	
		DC-14	**A**	1	0.2	0.05	0.03								
Low power switching reliability of contact				10^{-6} at 17 V / 2 mA											
Minimum operational conditions d.c. operation			**V**	17											
			mA	2											
Short-circuit protection				5 A fuse gG conforming to IEC 60947-5-1											
Spring terminals cabling	Number of conductors			1 per hole											
	Solid cable		**mm²**	-						0.2 to 1.5					
	Flexible cable without cable end		**mm²**	0.5 to 1.5						0.2 to 2.5					
	Flexible cable with cable end		**mm²**	-						0.25 to 1.5					

Ref.
Motor circuit breakers

References:
page B6/42

Dimensions and mounting

GV4 with toggle: GV4LE, GV4PE, GV4PEM, GV4PB

With EverLink® connector

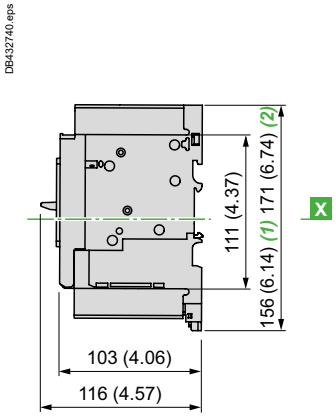

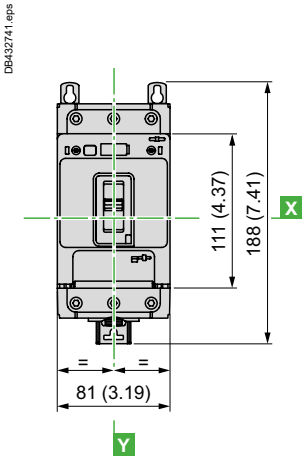

*(1) **GV4LE**, **GV4PE**, **GV4PEM**.*
*(2) **GV4PB**.*

With crimp lug connector

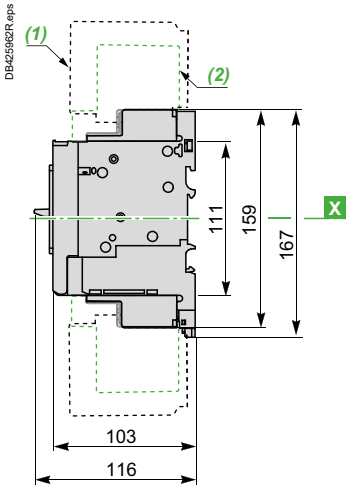

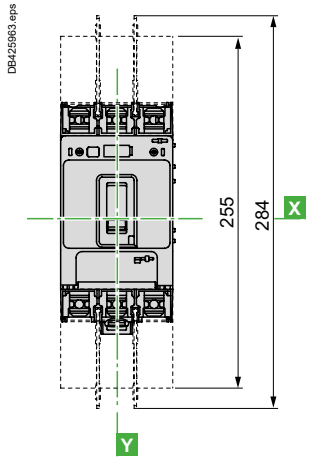

(1) Interphase barriers.
(2) Long terminal shield.

GV4 with rotary handle: GV4L, GV4P, or GV4LE, GV4PE, GV4PEM, GV4PB with GV4ADN01, GV4ADN02 direct mounting rotary handle

Dimensions

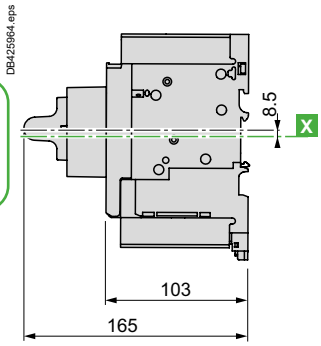

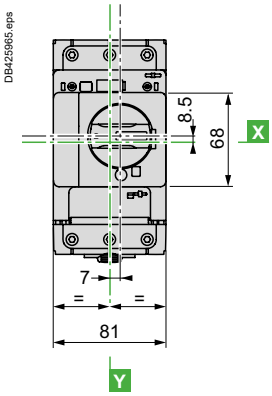

SDx module

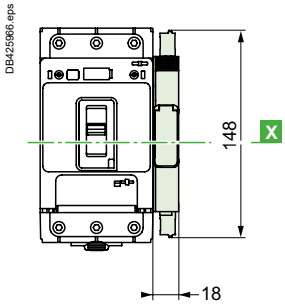

Ref.
Motor circuit breakers

Dimensions and mounting

GV4L, GV4P, GV4LE, GV4PE, GV4PEM, GV4PB

Panel mounting with M4 screws

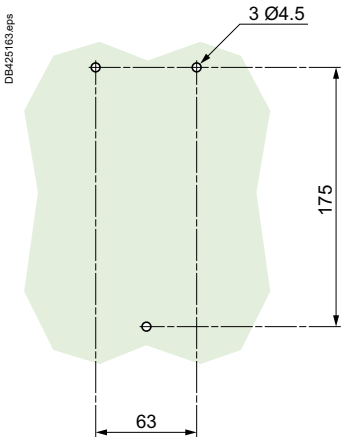

Door cut-out for rotary handle

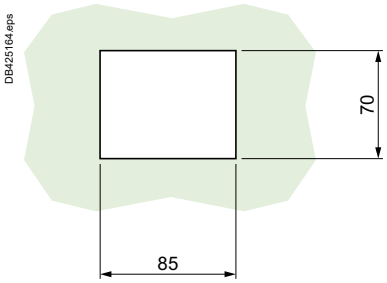

Minimum safety clearance

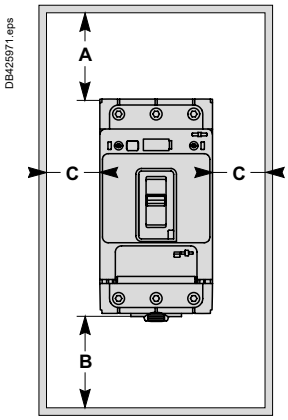

Toggle-type, rotary handle-type: identical clearance values.

Safety clearance (mm)

	Painted sheet metal			Bare sheet metal		
	A	B	C	A	B	C
No accessory	30	0	0	40	0	5
Interphase barriers	0	0	0	0	0	5
Long terminal shield	0	0	0	0	0	5

Dimensions and mounting

GV4 with extended rotary handle

Front extended rotary handle GV4APN01, GV4APN02, GV4APN04

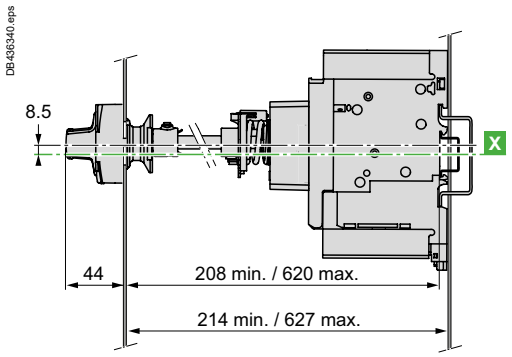

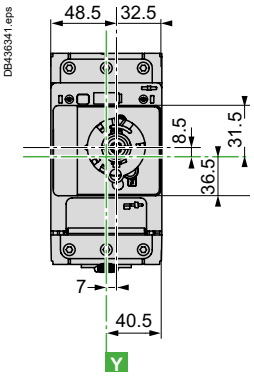

Ref.

Side (left or right) extended rotary handle LV426935, LV426936

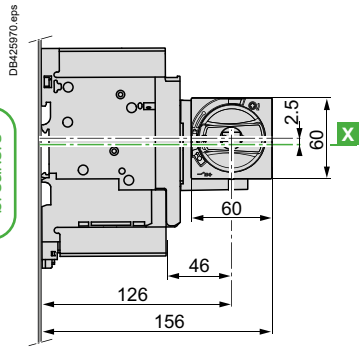

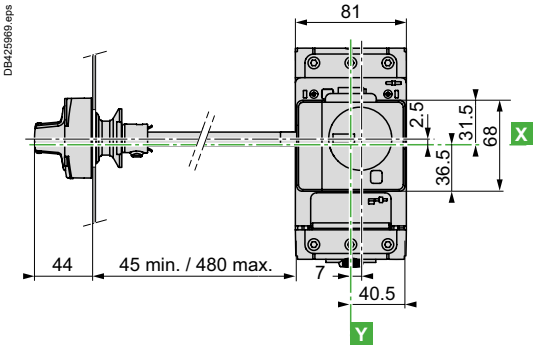

Motor circuit breakers

Front and side extended rotary handle, door/side panel cut-out

Front and side extended rotary handle

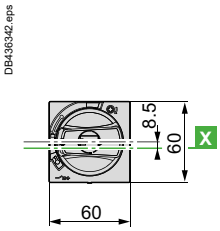

IP65, door panel cut-out

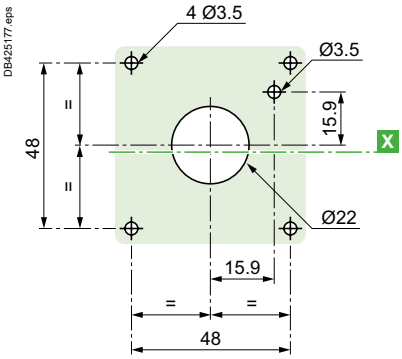

IP54, door/side panel cut-out

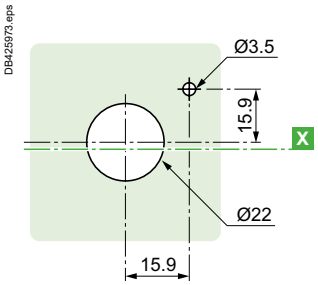

References:
pages B6/45 to B6/47

Life Is On Schneider Electric

Schemes

Magnetic motor circuit breakers

GV4L, GV4LE

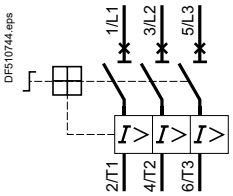

GV4P, GV4PE, GV4PEM, GV4PB

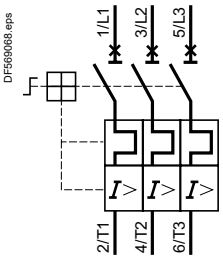

Accessories

Electrical trips

MN GV4AU●●●

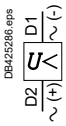

MX GV4AS●●●

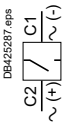

GV4AE11 auxiliary contacts

Used as OF contact

Used as SD contact

Side mounting add-on contact blocks
Instantaneous auxiliary contacts and fault signalling contacts

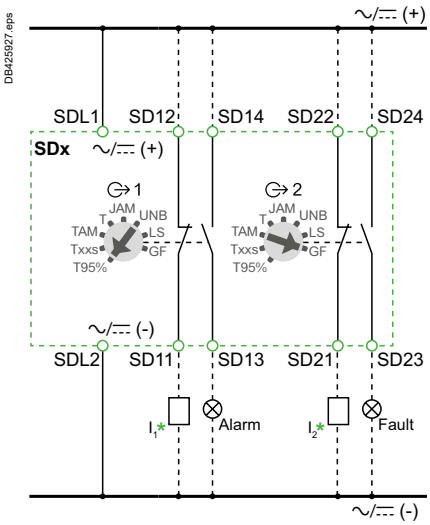

* I1, I2: PLC digital inputs - used as alarm inputs, as an example.

Ref.
Motor circuit breakers

TeSys Giga - Frame 5, 6

55 to 250 kW

Environment

Circuit breaker type				GV5P/ GV6P
Conforming to standards				IEC/EN 60947-4-1 IEC/EN 60947-2 UL 60947-4-1 CSA C22.2 n° 60947-4-1
Product certifications				CB, UKCA,UL, CSA, EAC, DNV-GL [(1)]
Climatic withstand				According to IACS E10
Degree of protection (front face)	Conforming to IEC 60529	Bare circuit breaker with terminal shields		IP40 with direct rotary handle
		Installed in switchboard		IP40 with direct rotary handle / IP43 with MCC conversion accessory/ IP55 with extended rotary handle
Shock resistance	Conforming to IEC 60068-2-27			15 gn -11 ms
Vibration resistance	Conforming to IEC 60068-2-6			2.5 gn (25 Hz)
Ambient air temperature	Storage in packing		°C	-50…+85
	Operation	Open mounted	°C	-25… +70
		In enclosure	°C	-25...+70
Flame resistance	Conforming to IEC 60695-2-11		°C	960
Maximum operating altitude			m	2000
Suitable for isolation	Conforming to IEC 60947-1 § 7-1-6			Yes
Resistance to mechanical impact			J	0.5
Sensitivity to phase failure				Yes

Technical characteristics

Circuit breaker type			GV5P150	GV5P220	GV6P320	GV6P500
Utilisation category	Conforming to IEC 60947-2		A			
	Conforming to IEC 60947-4-1		AC-3			
Rated operational voltage (Ue)	Conforming to IEC 60947-2	V	690			
Rated insulation voltage (Ui)	Conforming to IEC 60947-2	V	800			
Rated voltage	Conforming to UL 60947-4-1, CSA C22.2 n° 60947-4-1	V	600			
Rated operational frequency	Conforming to IEC 60947-4-1 UL, CSA	Hz	50/60			
Rated impulse withstand voltage (U imp)	Conforming to IEC 60947-2	kV	8			
Total power dissipated per pole		W	9.2	17.6	19.2	39.7
Mechanical durability (C.O.: Close, Open)		C.O.	40 000	20 000	15 000	15 000
Electrical durability for AC-3 duty	400/415 V (In)	C.O.	20 000	10 000	6 000	4 000
Duty class (maximum operating rate)		C.O./h	25			
Maximum conventional rated thermal current (Ith)	Conforming to IEC 60947-4-1	A	70…150	100...220	160...320	250...500
Rated duty	Conforming to IEC 60947-4-1		Continuous duty			

Mounting characteristics

Operating position
Without derating, in relation to normal vertical mounting plane

DB425283.eps

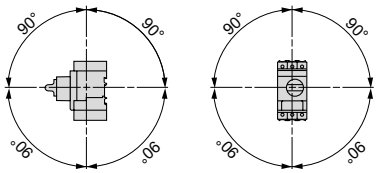

*(1) **EAC & DNV-GL** certifications are in progress. Please check with your nearest sales office for more details.*

Ref.
Motor circuit breakers

Curves

Thermal-magnetic tripping curves for GV5P

MicroLogic 2.2 M - 150/220 A

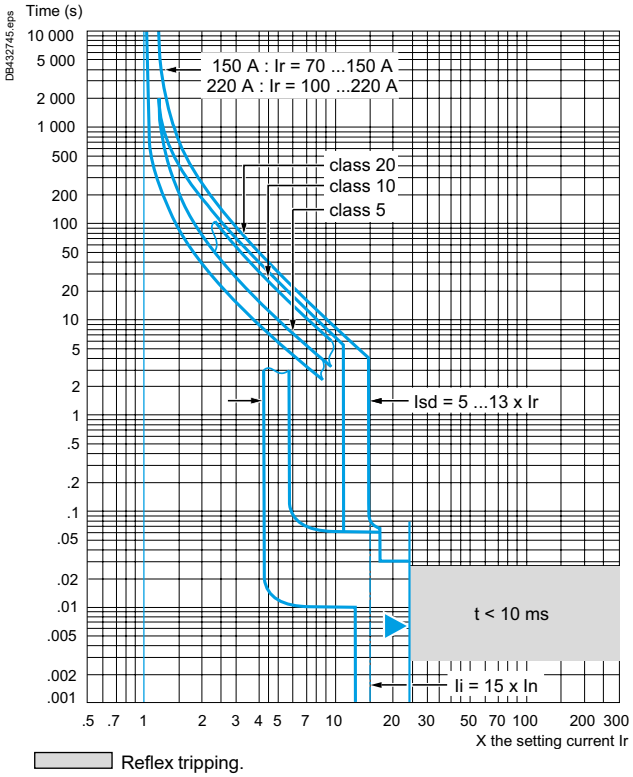

Reflex tripping.

Thermal-magnetic tripping curves for GV6P

MicroLogic 2.3 M - 320 A

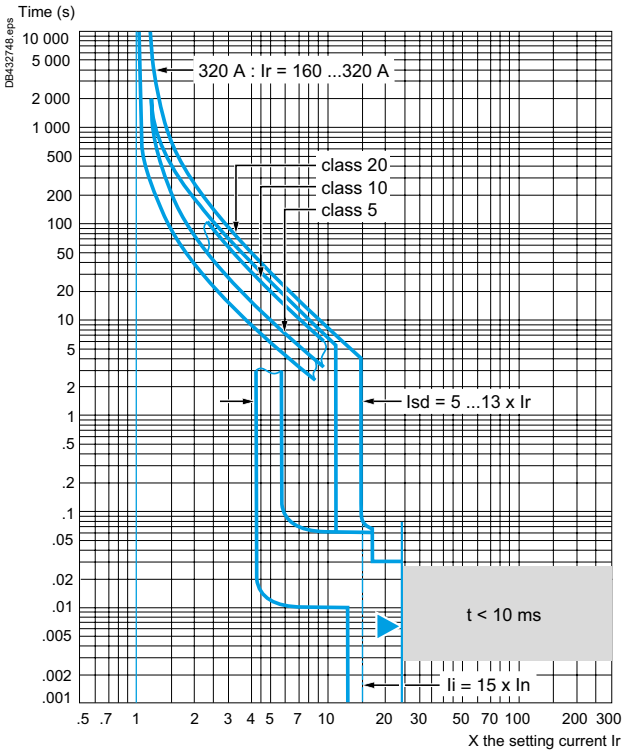

MicroLogic 2.3 M - 500 A

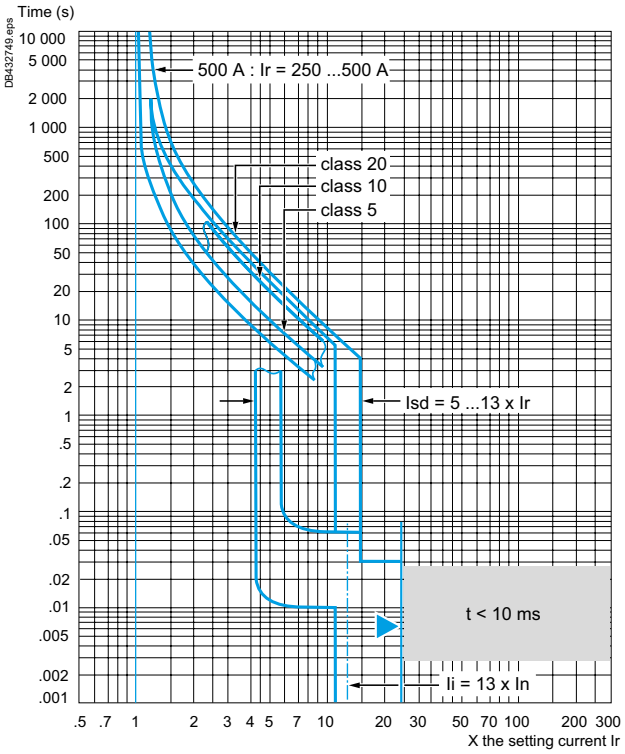

Reflex tripping.

Ref.
Motor circuit breakers

Current limitation on short-circuit (3-phase 400 - 415 V)

Dynamic stress

For GV5P/6P●●●F/H type

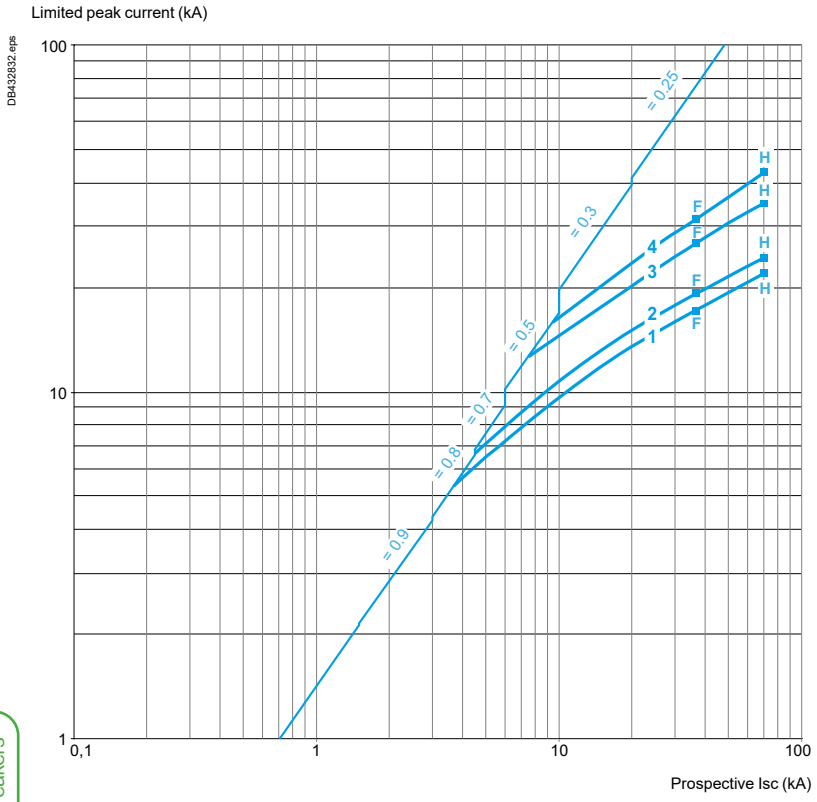

1 GV5P150F/H
2 GV5P220F/H
3 GV6P320F/H
4 GV6P500F/H

Maximum thermal limit on short-circuit

Thermal limit in kA²s in the magnetic operating zone

Sum of I²dt = f (prospective Isc) at 1.05 Ue = 435 V

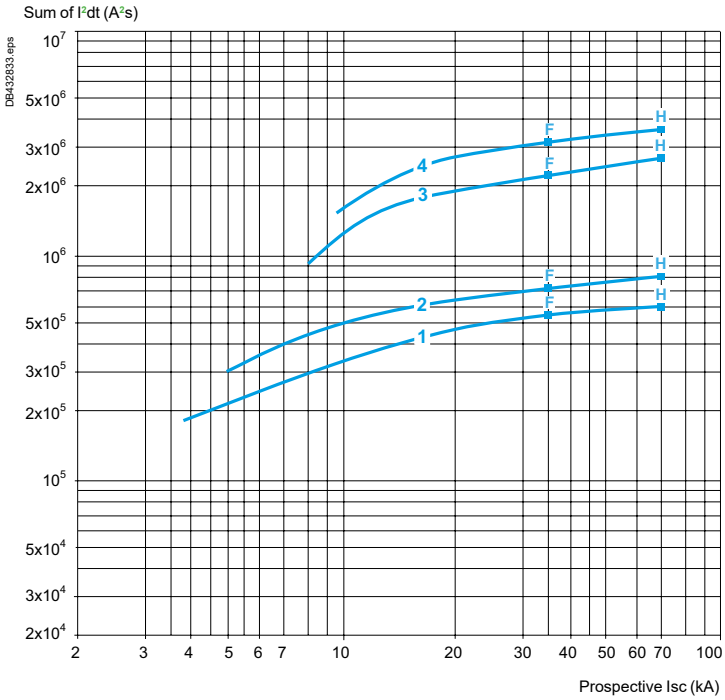

1 GV5P150F/H
2 GV5P220F/H
3 GV6P320F/H
4 GV6P500F/H

Characteristics

Characteristics of GV5P/GV6P electric trips

Type of trip			LV42940● undervoltage trip	LV42938● shunt trip
Rated insulation voltage (Ui)	Conforming to IEC 60947-1	V	690	690
	Conforming to CSA C22-2 n°14, UL 508	V	600	600
Operational voltage (Ue)	Conforming to IEC 60947-1	V	0.85...1.1 Uc	0.7...1.1 Uc
Drop-out voltage		V	0.7...0.35 Uc	0.7...0.35 Uc
Inrush consumption	~	VA	< 10	
Sealed consumption	~	VA	< 5	
Operating time	Conforming to IEC 60947-1	ms	From the moment the voltage reaches its operational value until opening of the circuit breaker. < 50	
On-load factor			100 %	
Cabling	Number of conductors		1	
	Solid cable	mm^2	1.5	
	Flexible cable without cable end	mm^2	1.5	
	Flexible cable with cable end	mm^2	1	
Tightening torque		N.m	1.2	
Mechanical durability (C.O.: Close - Open)		C.O.	50 % of the mechanical durability of the circuit breaker.	

Characteristics of GV5P/GV6P thermal fault module

Type of trip			LV429424 (1)
Operational voltage (Ue)	Conforming to IEC 60947-1	V	24 to 415 V AC/ DC
Conventional thermal current (Ith)	Conforming to IEC 60947-5-1	A	80 mA max.

*(1) **LV429424** takes the place of the AU/AS electric trip coil and an auxiliary contact.*

Auxiliary contact characteristics

Type of contacts				29450						29452				
Rated insulation voltage(Ui) (associated insulation coordination)	Conforming to IEC 60947-1		V	690						690				
Conventional thermal current (Ith)	Conforming to IEC 60947-5-1		A	6						5				
Mechanical durability (C.O.: Close - Open)			C.O.	50 000						50 000				
Operational current conforming to IEC 60947-5-1 a.c. operation				AC-12 or AC-15. 50 000 C.O.						AC-12 or AC-15. 50 000 C.O.				
	Rated operational voltage (Ue)		V	**24**	**48**	**110**	**220/ 240**	**380/ 440**	**690**	**24**	**48**	**110**	**230/ 240**	**380/ 415**
	Rated operational current (Ie)	AC-12	A	6	6	6	6	6	6	5	5	5	5	5
		AC-15	A	6	6	5	4	2	0.1	3	3	2.5	2	1.5
Operational current conforming to IEC 60947-5-1 d.c. operation				DC-12 or DC-14. 50 000 C.O.						DC-12 or DC-14. 50 000 C.O.				
	Rated operational voltage (Ue)		V	**24**		**48**		**110**	**250**	**24**		**48**	**110**	**250**
	Rated operational current (Ie)	DC-12	A	6		2.5		0.6	0.3	5		2.5	0.6	0.3
		DC-14	A	1		0.2		0.05	0.03	1		0.2	0.05	0.03
Minimum operational conditions d.c. operation			V	24						4				
			mA	100						1				
Short-circuit protection				By **GB2CB●●** circuit breaker (rating according to operational current for Ue ≤ 415 V) or gG fuse, 10 A max.										
Cabling	Solid cable		mm^2	1 x 1.5 conductor						1 x 1.5 conductor				
	Flexible cable without cable end		mm^2	1 x 1.5 conductor						1 x 1.5 conductor				
	Flexible cable with cable end		mm^2	1 x 1.5 conductor						1 x 1.5 conductor				

Dimensions and mounting

GV5P

Dimensions

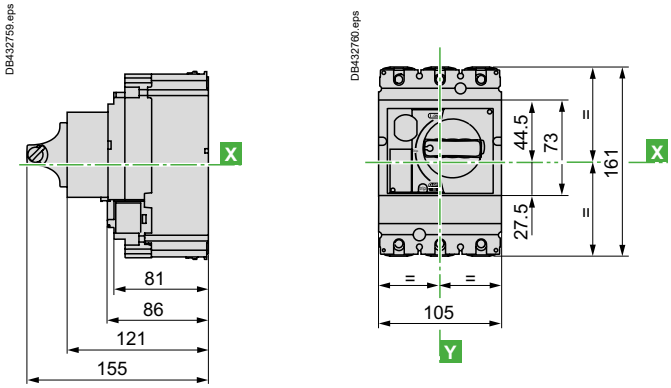

GV6P

Dimensions

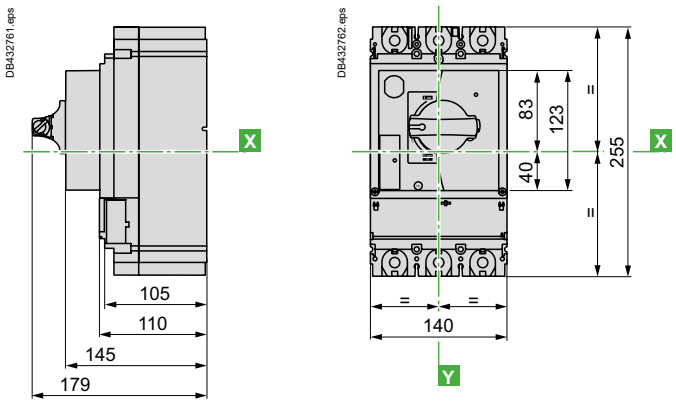

With long terminal shields or interphase barriers GV5P + GV7AC04/GV7AC01

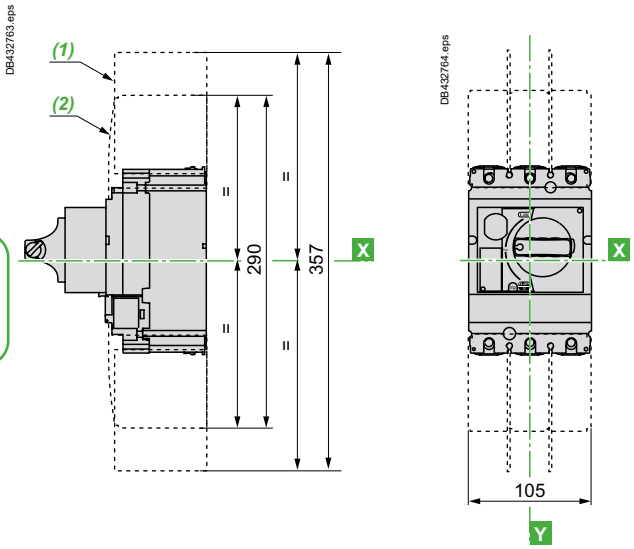

(1) Interphase barriers: **GV7AC04**.
(2) Terminal shield: **GV7AC01**.

GV6P + LV432593 / LV432595 / LV432570

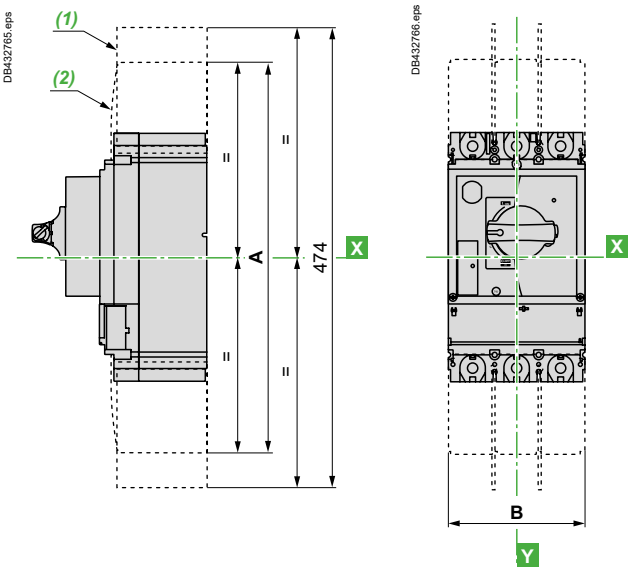

(1) Interphase barriers: **LV432570**.
(2) Terminal shield: **LV432593** *(45mm)* / **LV432595** *(52.5mm)* .

	A	B
LV432593	400	140
LV432595	480	157.5

Insulating screen

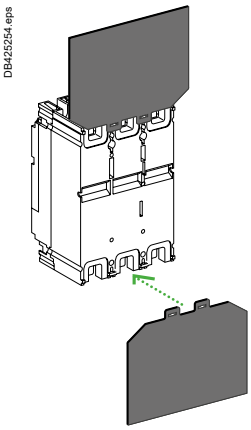

Motor circuit breaker		GV5P + GV7AC05	GV6P + LV432578
3P	W x H x thickness (mm)	140 x 105 x 1	203 x 175 x 1.5

Ref.
Motor circuit breakers

Dimensions and mounting

GV5P/GV6P

Panel mounting - GV5P

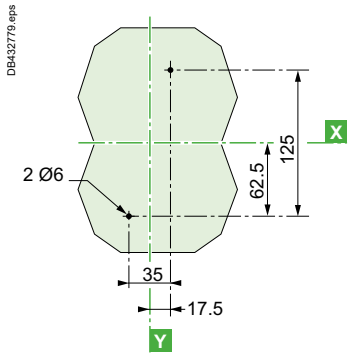

Panel mounting - GV6P

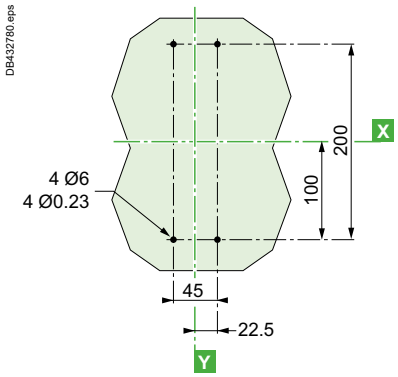

Mounting on 2 mounting rails for GV5P only

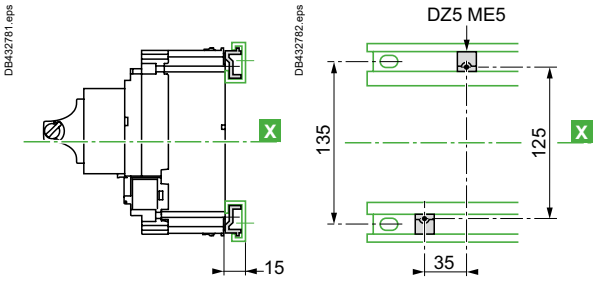

Door cut-out mounting GV5P

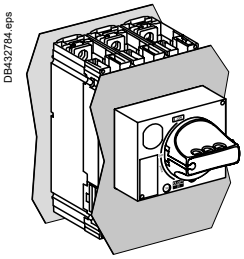

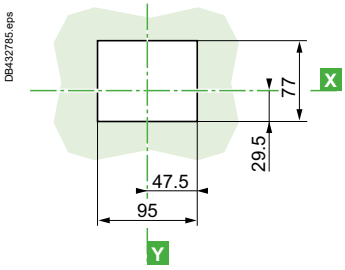

With access to trip unit

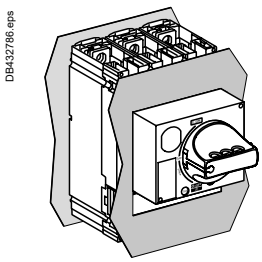

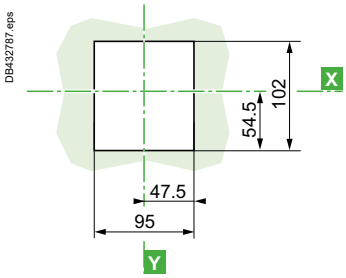

Door cut-out mounting GV6P

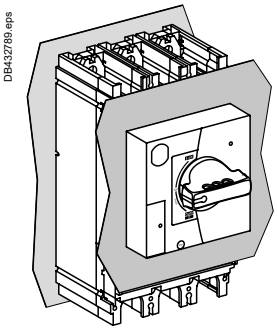

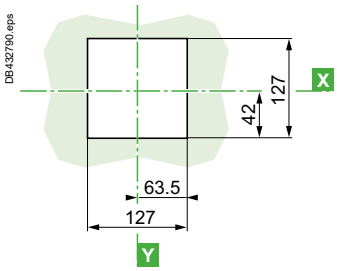

With access to trip unit

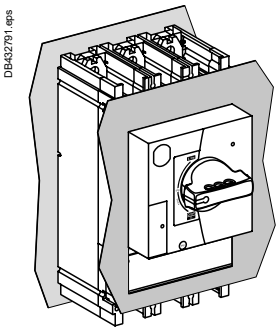

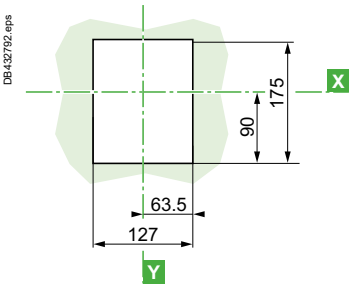

References:
pages B6/51 to B6/56
Characteristics:
page B6/140
Curves:
pages B6/141 to B6/143
Schemes:
page B6/152

GV5P

Minimum electrical clearance

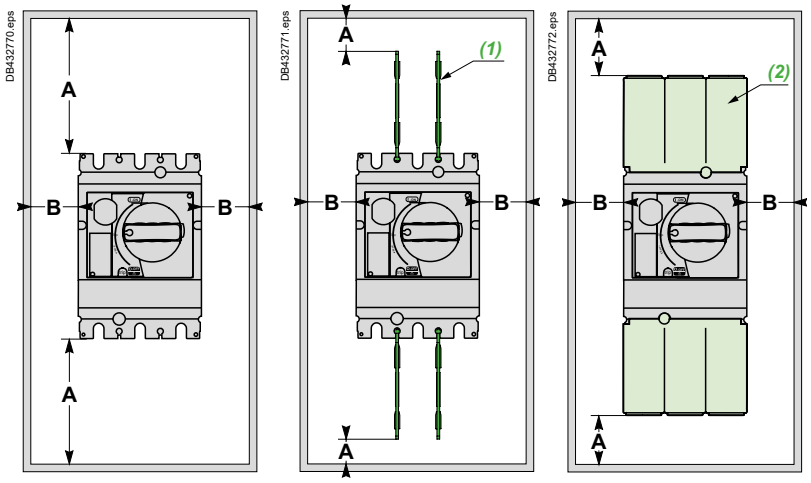

Clearance in mm

		Painted sheet metal		Bare metal plate	
		A	B	A	B
No accessories	V ≤ 500 V∼	30	0	40	20
	V > 500 V∼	-	-	-	-
Interphase barriers (1)	V ≤ 500 V∼	0	0	10	20
	V > 500 V∼	-	-	-	-
Terminal shield (2)	V ≤ 500 V∼	0	0	10	10
	V > 500 V∼	30	10	40	20

GV6P

Minimum electrical clearance

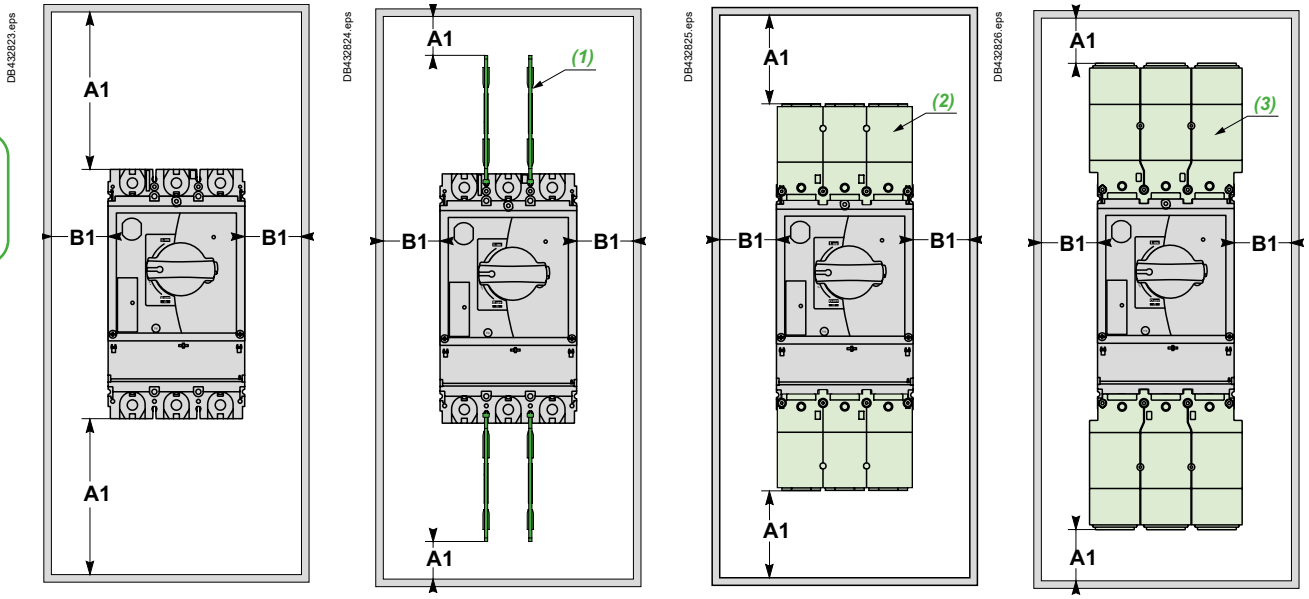

Clearance in mm

		Painted sheet metal		Bare sheet metal	
		A1	B1	A1	B1
No accessories	V ≤ 500 V∼	30	0	40	20
	V > 500 V∼	-	-	-	-
Interphase barriers (1)	V ≤ 500 V∼	0	0	10	20
	V > 500 V∼	-	-	-	-
Long terminal shield (LV432593) (2)	V ≤ 500 V∼	30	0	40	10
	V > 500 V∼	50	0	50	20
Long terminal shield (LV432595) (3)	V ≤ 500 V∼	0	0	10	10
	V > 500 V∼	30	0	30	20

Ref.
Motor circuit breakers

Dimensions and mounting

GV5P/GV6P

GV5 with extended rotary handle GV7AP01/ GV7AP02

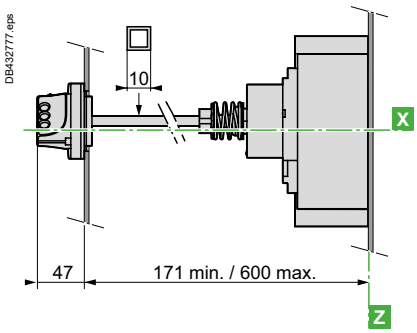

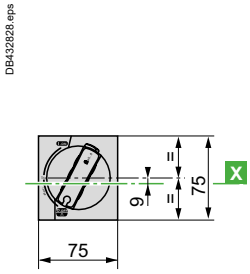

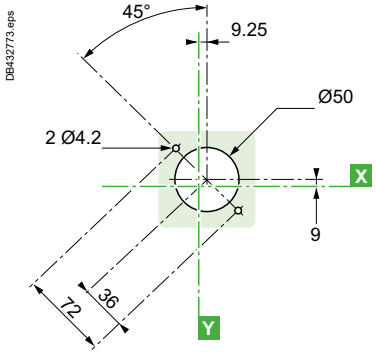

GV6 with extended rotary handle LV432598/ LV432600

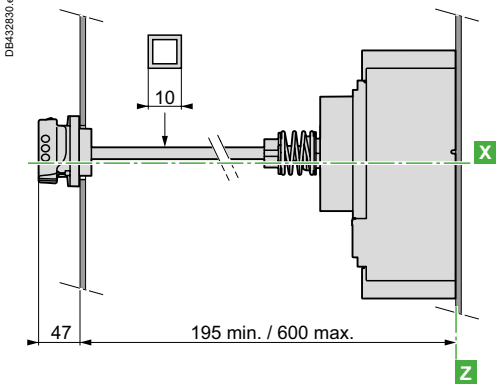

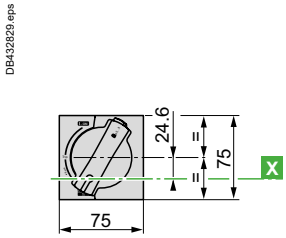

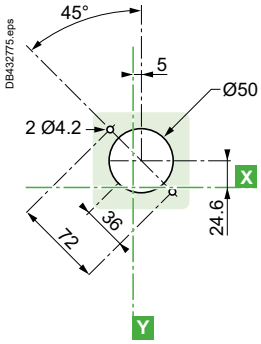

GV5P/GV6P

MCC type direct rotary handle

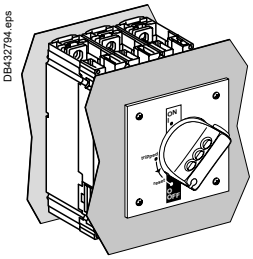

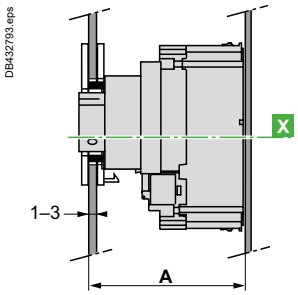

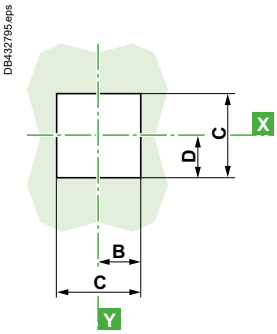

	A	B	C	D
150/220 A	125 ±2	50	100	41
320/500 A	149 ±2	72.5	145	51

Ref.
Motor circuit breakers

Dimensions and mounting

GV5P/GV6P

With additional PowerTag

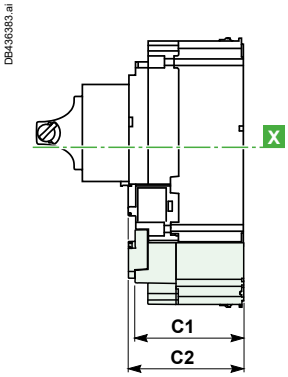

Type	C1	C2
GV5P	81	86
GV6P	95.5	110

GV5P with LV434020 / Panel mounting

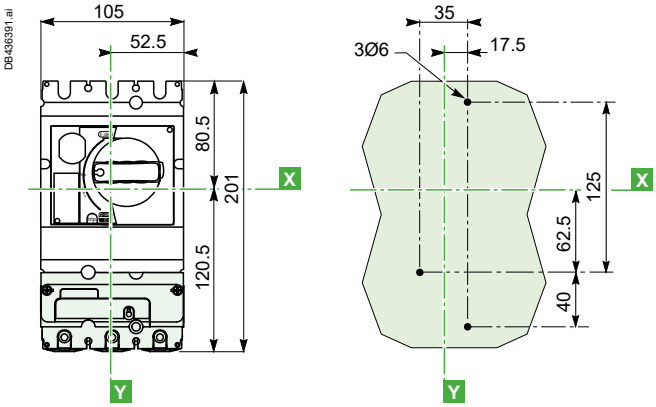

GV6P with LV434022 / Panel mounting

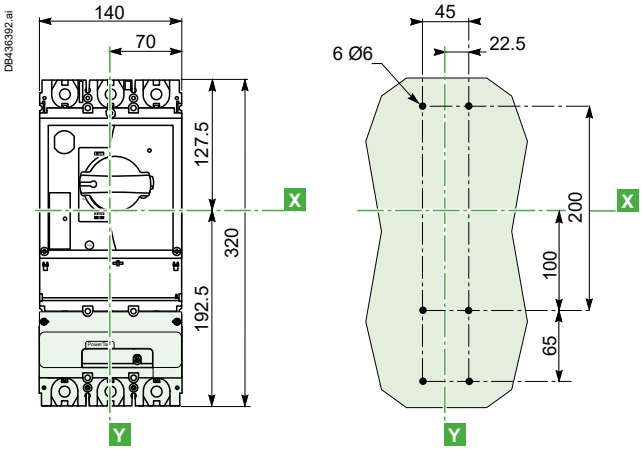

Life Is On Schneider Electric

Dimensions and mounting

GV5P/GV6P

Front connection without accessories

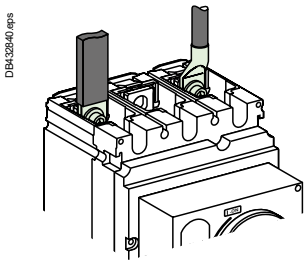

GV5P
Cables with lugs bars

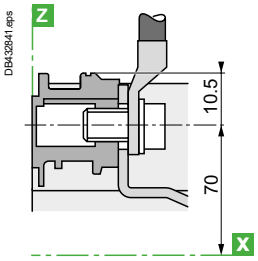

GV6P
Bars/cables with lugs

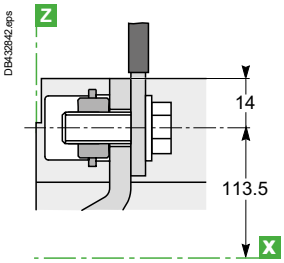

GV5P

Bare-cables connectors **GV7AC021/LV429227/GV7AC022** **LV429244**

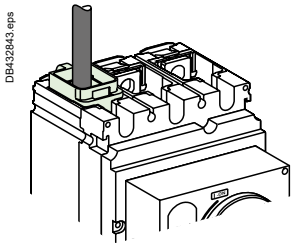

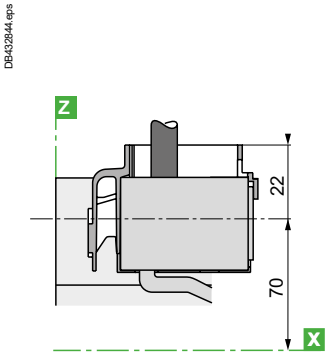

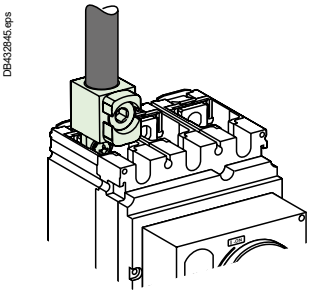

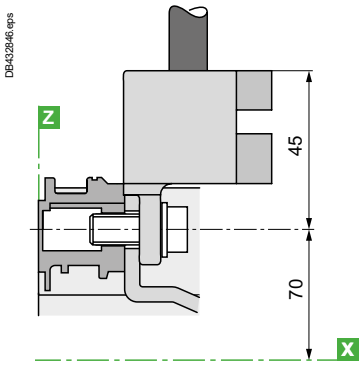

GV6P

Bare-cables connectors **LV432479** **LV432481**

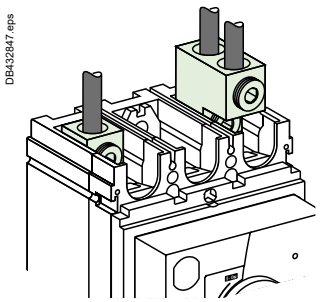

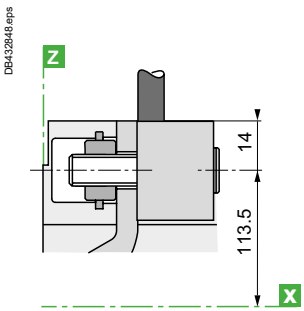

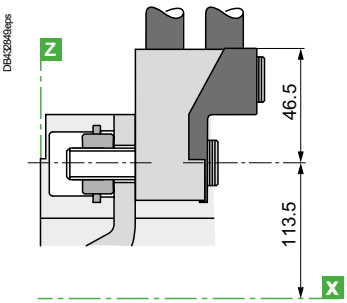

GV5P/GV6P

Spreaders

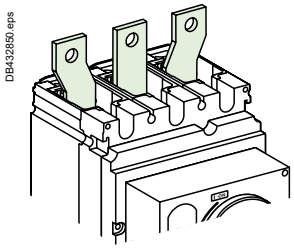

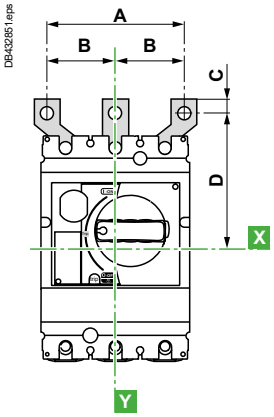

Type	A	B	C	D
GV5P/ Spreaders GV7AC03	114	45	11	100
GV6P/ Spreaders LV432490	135	52.5	15	152.5
GV6P/ Spreaders LV432492	170	70	15	166

Schemes

Motor circuit breakers

GV5P/ 6P

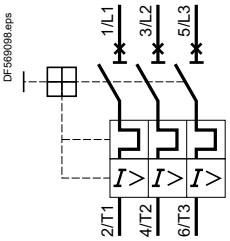

Add-on auxiliary contacts according to their location [1]

29450, 29452

Location 1
C/O contact

Location 2
Trip indication

Location 3
Electrical fault indication [2]

Location 4
C/O contact

A self-adhesive label, supplied with the contact, can be affixed to the front face of the circuit-breaker to allow personalised marking according to the function of the contact or contacts.

(1) See pages B6/52 to B6/54.
*(2) Adapter **LV429451** is mandatory for electrical trip indication in GV5.*

Electric trips

LV42940●

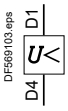

LV42938●

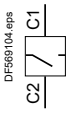

Thermal fault module LV429424

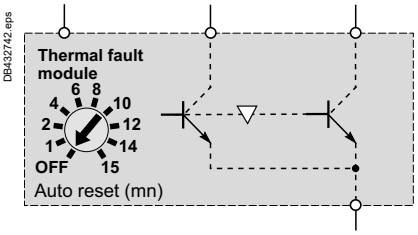

Recommended application schemes for LV429424

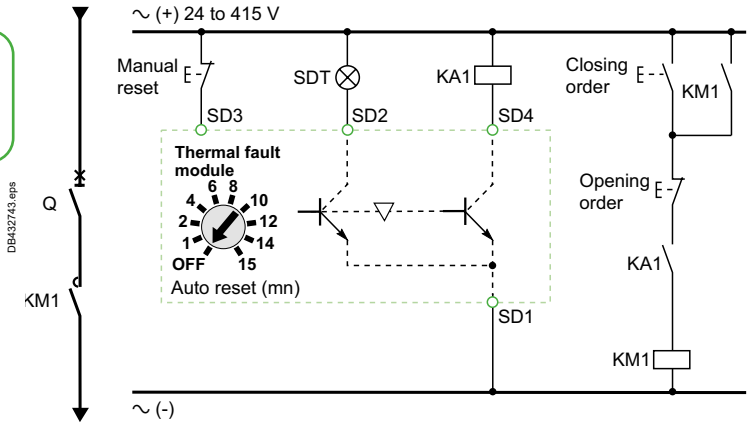

SD1, **SD3:** thermal fault module input power supply
SD2: over-load fault signal output. This output will stay-put until reset
SD4: contactor control output
SD2 and SD4: Static outputs: 24 to 415 V AC / V DC; 80 mA max
KM1: LC1D or LC1F contactor
KA1: CA2 or CAD type control relays

Terminals shown in green **O** must be connected by customer.

Ref.
Motor circuit breakers

PowerLogic™ Energy measurement solutions

Energy measurement – PowerLogic

PowerTag Energy Flex 63 A (F63)

Main characteristics

Rated voltage	3P	Un	Phase-to-phase	V	380… 415 V AC ± 20 %
	3P+N	Un	Phase-to-neutral	V	220… 240 V AC ± 20 %
			Phase-to-phase	V	380… 415 V AC ± 20 %
Frequency				Hz	50/60
Maximum current		Imax		A	63
Basic current		Ib		A	10
Saturation current				A	130
Maximum consumption			3P/3P+N	VA	≤ 2
Starting current		Ist		mA	40

Additional characteristics

Operating temperature		°C	-25 to +60
Storage temperature		°C	-40 to +85
Overvoltage category	As per IEC 61010-1		Cat. III
Measuring category	As per IEC 61010-2-030		Cat. III
Pollution degree			3
Altitude		m	≤ 2000
Degree of protection	Device only		IP20
	IK		05

Radio-frequency communication

ISM band 2.4 GHz		GHz	2.4 to 2.4835
Channels	As per IEEE 802.15.4		11 to 26
Isotropic Radiated Power	Equivalent (EIRP)	dBm	0
Maximum transmission time		ms	< 5
Channel occupancy	Messages sent every	s	5 minimum

Characteristics of measuring functions

Function	Symbol	Performance category as per IEC 61557-12 (PMD-I/DD/K55/1) Class	Measuring range
Active power	P	1	9 W to 63 kW
Active energy	Ea	1	Total and partial 0 to 99999999.9 kWh
Current	I	1	40 mA to 63 A
Voltage	U	0.5	Un ± 20 %
Power factor	PFA	1	0 to 1

Dimensions

A9MEM1573

A9MEM1570

3P

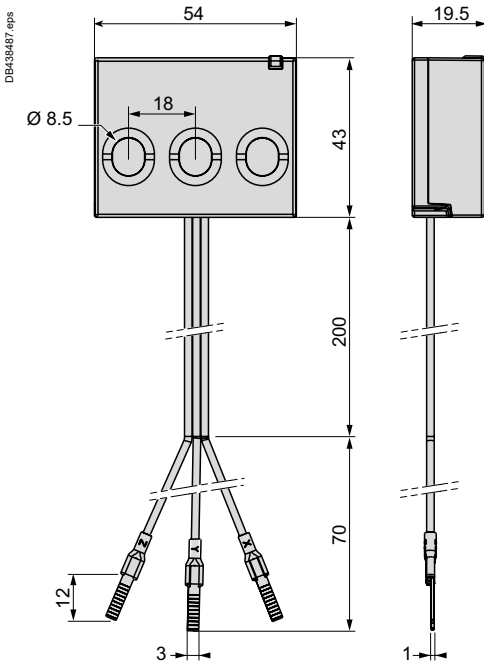

3P + N

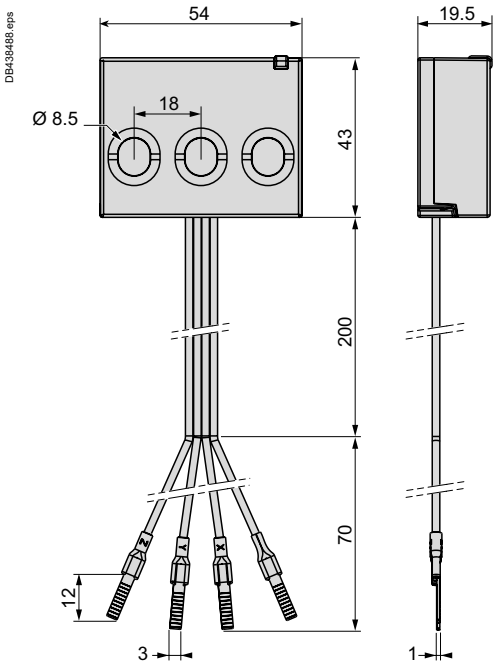

References:
page B6/59

Energy measurement – PowerLogic

PowerTag Energy Flex 160 A (F160)

Main characteristics (as per IEC 61557-12)

Rated voltage	Un	Phase-to-neutral	**V**	100...277 V AC ± 20 %
		Phase-to-phase		173...480 V AC ± 20 %
Frequency			**Hz**	50/60
Maximum current	Imax		**A**	160
Maximum operating current				1.2 x Imax
Saturation current				2 x Imax
Maximum consumption			**VA**	3
Starting current	Ist		**mA**	100
Basic current	Ib		**A**	25

Additional characteristic

Operating temperature		**°C**	-25 to +70
Storage temperature		**°C**	-40 to +85
Overvoltage category	As per IEC 61010-1		Cat. IV
Measuring category	As per IEC 61010-2-030		Cat. IV
Pollution degree			3
Altitude		**m**	Up to 2000 without derating (1)
Degree of protection device			IP20
			IK05

Radio-frequency communication

ISM band 2.4 GHz		**GHz**	2.4 to 2.4835
Channels	As per IEEE 802.15.4		11 to 26
Isotropic Radiated Power	Equivalent (EIRP)	**dBm**	0
Maximum transmission time		**ms**	< 5
Channel occupancy	For 1 device	**s**	messages sent every 5

Characteristics of measuring functions

Function	Symbol	Performance category as per IEC 61557-12 (PMD-II/DD/K70/1)		Measuring range
		Class	Measuring range	
Total active power (Active power per phase)	P	1	2.5 to 160 A	24 W (8 W) to 192 kW
Total reactive power (Reactive power per phase)	Q_A	2		30 VAR (10 VAR) to 192 kVAR
Total apparent power (Apparent power per phase)	S_A	2		38 VA (13 VA) to 192 kVA
Active Energy: per phase, total, partial, delivered and received	E_a	1		0 to 281.10^9 kWh
Reactive energy: per phase, total, partial, delivered and received	E_{rA}	2		0 to 281.10^9 kVARh
Apparent energy: per phase, total, partial	E_{apA}	2		0 to 281.10^9 kVAh
Frequency	f	1	50 / 60 Hz ± 2 %	45 to 65 Hz
Phase current	I	1	5 to 160 A	100 mA to 320 A
Neutral current	I_{NC}	2		
Voltages (Line to Line)	U	0.5	Un ± 20 %	138 to 576 V AC
Power factor (per phase, total)	PF_A	1	From 0.5 inductive to 0.8 capacitive	-1 to 1

(1) Above 2000 m, please consult us.

Dimensions

PowerTag Energy Flex 160 A

PB121658.eps

DB438489.eps

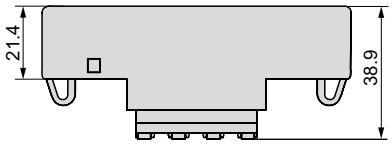

DB438490.eps

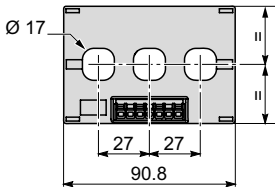

References:
page B6/60

Energy measurement – PowerLogic

PowerTag Energy Monoconnect 250 A, 630 A

Main characteristics

Rated voltage	Un	Phase-to-neutral	**V**	230 V AC ± 20 %
		Phase-to-phase	**V**	400 V AC ± 20 %
Frequency			**Hz**	50/60
Maximum current	Imax		**A**	250/630
Maximum operating current				1.2 x Imax
Saturation current				2 x Imax
Maximum consumption			**VA**	3.7
Starting current	Ist		**mA**	160/400
Basic current	Ib		**A**	40/100

Additional characteristic

Operating temperature		**°C**	-25 to +70
Storage temperature		**°C**	-50 to +85
Overvoltage category	As per IEC 61010-1		Cat. IV
Measuring category	As per IEC 61010-2-030		Cat. III
Pollution degree			3
Altitude			Up to 2000 m without derating (1)
Degree of protection device			IP20
			IK07

Radio-frequency communication

ISM band 2.4 GHz		**GHz**	2.4 to 2.4835
Channels	As per IEEE 802.15.4		11 to 26
Isotropic Radiated Power	Equivalent (EIRP)	**dBm**	0
Maximum transmission time		**ms**	< 5
Channel occupancy	For 1 device	**s**	messages sent every 5

Characteristics of measuring functions

Function	Symbol	Performance category as per IEC 61557-12 (PMD-II/DD/K70/1)		Measuring range (250 A / 630 A)
		Class	Measuring range	
Total active power (Active power per phase)	P	1	4 to 250 A / 10 to 630 A	88 W (29 W) to 416 kW / 222 W (74 W) to 1048 kW
Total reactive power (Reactive power per phase)	Q_A	2		88 VAR to 416 kVAR / 221 VAR to 1048 kVAR
Total apparent power (Apparent power per phase)	S_A	2		88 VA to 416 kVA / 221 VA to 1048 kVA
Active Energy: per phase, total, partial, delivered and received	E_a	1		0 to 281.109 kWh
Reactive energy: per phase, total, partial, delivered and received	E_{rA}	2		0 to 281.109 kVARh
Frequency	f	1	45 to 55 Hz	45 to 65 Hz
Phase current	I	1	8 to 250 A / 20 to 630 A	160 mA to 500 A / 400 mA to 1260 A
Voltages (Line to Line)	U	0.5	Un ± 20 %	320 to 480 V AC
Power factor	PF_A	1	From 0.5 inductive to 0.8 capacitive	-1 to 1

(1) Above 2000 m, please consult us.

Dimensions

GV5P with LV434020 / Panel mounting

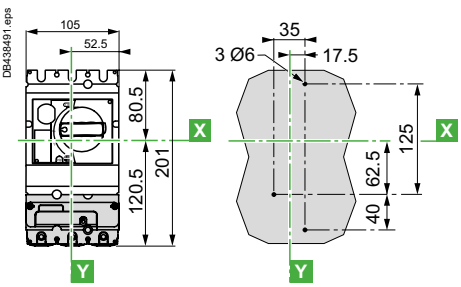

GV6P with LV434022 / Panel mounting

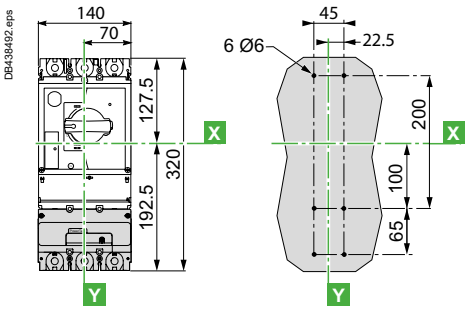

With additional PowerTag

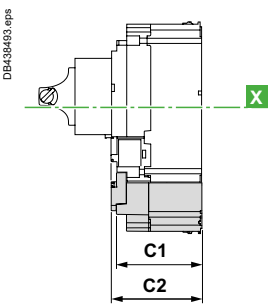

Type	C1	C2
GV5P	81	86
GV6P	95.5	110

References:
page B6/61

Life Is On Schneider Electric

Characteristics

Energy measurement – PowerLogic

PowerTag Link

Main characteristics

Supply voltage	Us	**V**	110/230 V AC ± 20 %, 2 A
Frequency		**Hz**	50/60
Power consumption		**VA**	5
Communication interface			Ethernet 10/100 BASE-T, Cable length ≤ 100 m Cat.6 STP
Wireless communication			Up to 20 or 100 PowerTag Energy sensors
Integrated connection type			DHCP client (Ethernet port)
Local indication	Product state		Green, orange and red LED
	Ethernet state (LAN ST)		Green, orange and red LED
Overvoltage category			III
Radio-frequency communication	ISM band 2.4 GHz	**GHz**	2.4 to 2.4835
Degree of protection (IEC 60529)	Device only		IP20
	Device in modular enclosure		IP40 Insulation class II
Fire resistance			650 °C, 30 s
Environment			In compliance with the RoHS directive REACH Regulations

Additional characteristics

Operating temperature		**°C**	-25 to +60
Storage temperature		**°C**	-40 to +85
Pollution degree			2
Tropicalization (IEC 60068-2-30)			Treatment 2 (relative humidity of 93 % at 40°C)
Operating altitude		**m**	0 to 2000
Electromagnetic compatibility	Reference standards		
	Immunity		EN 55035
	Emissions		EN 55032
	Electromagnetic compatibility and Radio spectrum Matters (ERM)		EN 300328 EN 301489-1 EN 301489-17

Dimensions

PowerTag Link

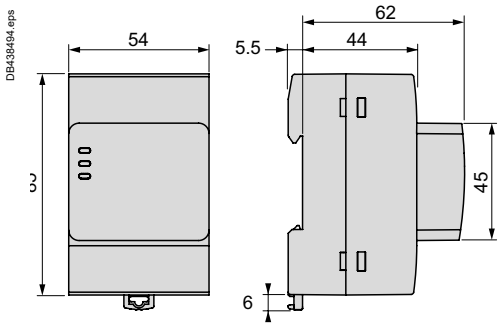

Ref.
Motor circuit breakers

References:
page B6/62

Life Is On Schneider Electric

TeSys Modular circuit breakers

0.5 to 20 A

(for equipment and control circuits)

Environment

Circuit breaker type			GB2CB	GB2CD	GB2DB	GB2CS
Conforming to standards			IEC 60947-1, 947-2, EN 60947-1, 60947-2			
Product certifications			cCSAus (1)	cCSAus (1)	–	–
Degree of protection	Conforming to IEC 60529		IP 20			
Shock resistance	Conforming to IEC 60068-2-27		22 gn for 20 ms			
Vibration resistance	Conforming to IEC 60068-2-6		5 gn (5…110 Hz)			
Ambient air temperature around the device	Storage	°C	-40…+80			
	Operation	°C	-20…+60			
Flame resistance	Conforming to IEC 60695-2-11	°C	960			
Maximum operating altitude		m	3000			
Operating position	In relation to normal vertical mounting plane		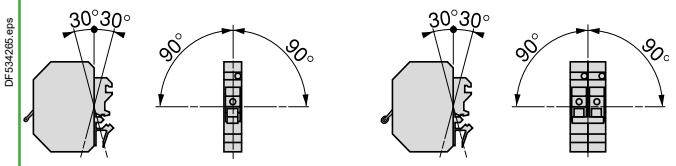 GB2CB,CD, CS		GB2DB	
Cabling			Minimum c.s.a.		Maximum c.s.a.	
	Solid cable	mm²	1 x 0.75		1 x 6 or 2 x 4	
	Flexible cable with cable end	mm²	1 x 0.75		1 x 4 or 2 x 2.5	
Tightening torque		N.m	1.2			

Technical characteristics

Utilisation category	Conforming to IEC 60947-2		A	A	A	A
Rated operational voltage (Ue)	Conforming to IEC 60947-2	V	250 (2)	250	415	250 (2)
	Conforming to CSA C22-2 Nr 14 and UL 1077	V	277	277	–	–
Rated operational frequency	Conforming to IEC 60947-2	Hz	50/60	50/60	50/60	50/60
Rated impulse withstand voltage (U imp)	Conforming to IEC 60947-2	kV	4	4	4	4
Total power dissipated per pole		W	2	2	2	1.9
Mechanical and electrical durability	C.O.: Closing - Opening	C.O.	8000	8000	8000	8000

Operational current correction coefficient (a or ⎓)	According to the permissible ambient temperature	°C	-20	-10	0	+10	+20	+30	+40	+50	+60
	Correction coefficient		1.2	1.15	1.1	1.05	1	0.95	0.90	0.85	0.80

Tripping threshold	Of the magnetic trips		12…16 In	12…16 In	12…16 In	5…7 In

*(1) Except for **GB2CB16**, **GB2CB22**, **GB2CD16**, **GB2CD22**.*
*(2) Ue = 415 V when a **GB2** circuit breaker is fitted on every live conductor.*

Tripping curves

Average operating time at 20 °C without prior current flow (cold state)

GB2CB, GB2CD, GB2 DB

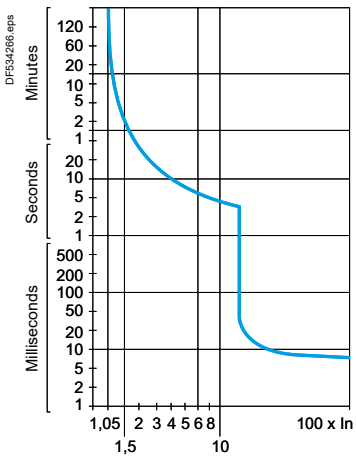

GB2CS

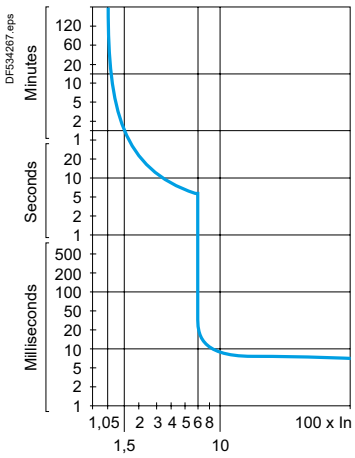

References:
pages B6/65 and B6/66
Dimensions:
page B6/163
Schemes:
page B6/163

Characteristics

Circuit breaker type				GB2										
				CB05	CB06	CB07	CB08	CB09	CB10	CB12	CB14	CB16	CB20	CB21
Rating			A	0.5	1	2	3	4	5	6	8	10	12	16
Breaking capacity conforming to IEC 60947-2 ∿ 50/60 Hz	230/240 V	Icu	kA	10	10	10	3	3	2	1.5	1.5	1	1	1
		Ics % (1)		25	25	25	50	50	75	75	75	75	75	75
Circuit breaker type				**GB2**										
				CD05	**CD06**	**CD07**	**CD08**	**CD09**	**CD10**	**CD12**	**CD14**	**CD16**	**CD20**	**CD21**
Rating			A	0.5	1	2	3	4	5	6	8	10	12	16
Breaking capacity conforming to IEC 60947-2 ∿ 50/60 Hz	230/240 V	Icu	kA	10	10	10	3	3	2	1.5	1.5	1	1	1
		Ics % (1)		25	25	25	50	50	75	75	75	75	75	75
Circuit breaker type				**GB2**										
				DB05	**DB06**	**DB07**	**DB08**	**DB09**	**DB10**	**DB12**	**DB14**	**DB16**	**DB20**	**DB21**
Rating			A	0.5	1	2	3	4	5	6	8	10	12	16
Breaking capacity conforming to IEC 60947-2 ∿ 50/60 Hz	230/240 V	Icu	kA	10	10	10	3	3	2	1.5	1.5	1	1	1
		Ics % (1)		25	25	25	50	50	75	75	75	75	75	75
	400/415 V	Icu	kA	10	10	10	3	3	2	1.5	1.5	1	1	1
		Ics % (1)		25	25	25	50	50	75	75	75	75	75	75

(1) As % of Icu.

Ref.
Motor circuit breakers

References:
pages B6/65 and B6/66
Dimensions:
page B6/163
Schemes:
page B6/163

Characteristics

Circuit breaker type				GB2										
				●●05	●●06	●●07	●●08	●●09	●●10	●●12	●●14	●●16	●●20	●●21
Breaking capacity (Icu) conforming to IEC 60947-2 ⎓		24 V	kA	1.5	1.5	1.5	1.5	1.5	1.5	1.5	1.5	1.5	1.5	1.5
		48 V	kA	1	1	1	1	1	1	1	1	–	–	–
Operational current conforming to IEC 60947-5-1 ⎓	DC-12	24 V	A	0.5	1	2	3	4	5	6	8	10	12	16
		48 V	A	0.5	1	2	3	4	5	6	8	10	12	16
	DC-13	24 V	A	0.5	1	2	3	4	5	6	8	10	12	16
		48 V	A	0.5	1	2	3	4	5	6	8	–	–	–

Circuit breaker type				GB2	
				CS05	CS06
Rating			A	0.5	1
Breaking capacity conforming to IEC 60947-2 ∿ 50/60 Hz	230/240 V	Icu	kA	10	10
		Ics % (1)		25	25
Breaking capacity (Icu) conforming to IEC 60947-2 ⎓		24 V	kA	1.5	1.5
		48 V	kA	1	1
Operational current conforming to IEC 60947-5-1 ⎓	DC-12	24 V	A	0.5	1
		48 V	A	0.5	1
	DC-13	24 V	A	0.5	1
		48 V	A	0.5	1

Maximum permissible line length for star-delta starting (length of cable containing 2 or more conductors)										
With contactors LC●D09 …D18	Operational voltage		V	48	110	230	48	110	230
	C.s.a.	0.60 mm²	m	(2)	31	365	6	85	230
		0.75 mm²	m	(2)	39	460	8	110	290
		1 mm²	m	(2)	52	610	10	145	380
		1.5 mm²	m	(2)	78	910	15	220	570
		2.5 mm²	m	(2)	130	1520	26	360	950
		4 mm²	m	(2)	200	2400	41	580	1500
With contactors LC●D25…D32	Operational voltage		V	48	110	230	48	110	230
	C.s.a.	0.60 mm²	m	(2)	(2)	230	(2)	56	230
		0.75 mm²	m	(2)	(2)	290	(2)	70	290
		1 mm²	m	(2)	(2)	390	(2)	95	380
		1.5 mm²	m	(2)	(2)	580	(2)	140	570
		2.5 mm²	m	(2)	(2)	970	(2)	230	950
		4 mm²	m	(2)	(2)	1500	(2)	375	1500
With contactors LC●D40…D80	Operational voltage		V	48	110	230	48	110	230
	C.s.a.	0.60 mm²	m	(2)	(2)	46	(2)	13	100
		0.75 mm²	m	(2)	(2)	60	(2)	17	130
		1 mm²	m	(2)	(2)	80	(2)	22	170
		1.5 mm²	m	(2)	(2)	120	(2)	34	250
		2.5 mm²	m	(2)	(2)	190	(2)	56	420
		4 mm²	m	(2)	(2)	310	(2)	90	680

(1) As % of Icu.
(2) Use relays.

Ref.
Motor circuit breakers

Dimensions and schemes

Dimensions

GB2CB●●, GB2CD●●, GB2CS●●

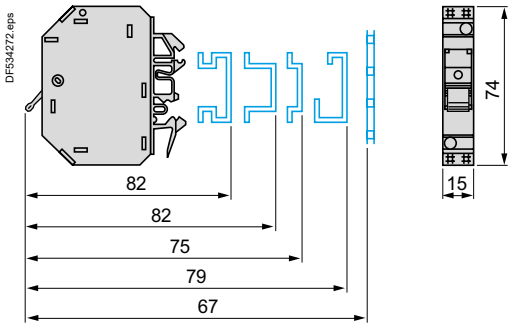

GB2DB●●

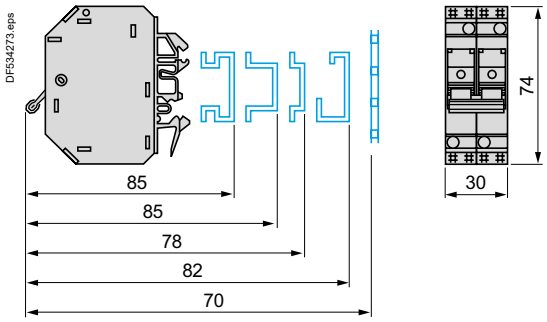

Marking: up to twelve AB1 R clip-in markers.

Schemes

GB2CB●●

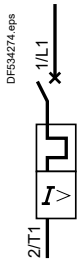

GB2CD●●

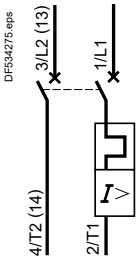

GB2DB●●

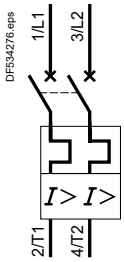

GB2CS●●

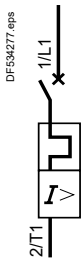

Ref.
Motor circuit breakers

References:
pages B6/65 and B6/66

Characteristics:
pages B6/160 to B6/162

Life Is On Schneider Electric

TeSys Control
SK, K, Deca Control relays

TeSys SK, K Relays

Product		Pages
Mini relays - 2 contacts, simultaneous action TeSys SK, SKE		B7/2
Relays - 4 contacts, simultaneous action TeSys K		B7/4
Auxiliary contact blocks, accessories TeSys K		B7/6

TeSys Deca Relays

Relays 5 contacts, simultaneous action		B7/8
TeSys Deca Accessories		B7/10

Technical Data for Designers B7/13

Mini control relays

CA2SK11●●

- Width of mini control relays 27 mm.
- Mounting on 35 mm ⎓ rail.
- Connection by screw clamp terminals.

Control circuit supply	Auxiliary contacts		Basic reference, to be completed by adding the voltage code [1]
a.c. supply	2	–	**CA2SK20●●**
	1	1	**CA2SK11●●**
d.c. supply	2	–	**CA3SK20●●**
	1	1	**CA3SK11●●**

Mini control relay with alternating contacts

CA2SKE20●●

This mini control relay with alternating contacts (see function diagram page B7/17) makes it possible to automatically split the operating time between 2 circuits of a redundant system.
By regularly energising the “safety circuits”, this device makes it possible to ensure that they are operating correctly.

- Width of mini control relay 45 mm.
- Fixing by Ø4 screws.
- Connection by screw clamp terminals..
- Cannot be fitted with front-mounted auxiliary contact block.
- Cannot be fitted with coil suppressor module.

Control circuit supply	Auxiliary contacts		Basic reference, to be completed by adding the voltage code [1]
a.c. supply	2	–	**CA2SKE20●●**

(1) Standard control circuit voltages (for other voltages, please consult your Regional Sales Office):

Mini control relays CA2SK and CA2SKE									
Volts ∼ 50/60 Hz	**24**	**48**	**110**	**120**	**220**	**230**	**240**	**380**	**400**
Code	B7	E7	F7	G7	M7	P7	U7	Q7	V7
Mini control relays CA3SK									
Volts ⎓	**12**	**24**	**36**	**48**	**72**				
Code	JD	BD	CD	ED	SD				

Characteristics: pages B7/14 and B7/15
Dimensions: page B7/16
Schemes: page B7/17

Product references

PB111639_R.eps

LA1SK●●

Instantaneous auxiliary contact blocks

Clip-on front mounting

For use on control relays	Maximum number of blocks per contactor	Composition		Reference
CA2SK20	1	2	–	**LA1SK20**
		–	2	**LA1SK02**
		1	1	**LA1SK11**

PB111640_R.eps

LA4SK●1●

Suppressor modules

Connection without need for tools by clipping onto right-hand side of contactor

For use on control relays	Type	For voltages	Sold in lots of	Unit reference
CA2SK and **CA3SK**	Varistor (1)	∿ and ⎓ 24 V…48 V	10	**LA4SKE1E**
		∿ and ⎓ 110 V…250 V	10	**LA4SKE1U**
	Diode (2)	⎓ 24 V…250 V	10	**LA4SKC1U**

(1) Protection provided by limiting the transient voltage to 2 Uc max.
Maximum reduction of transient voltage peaks.
Slight increase in drop-out time (1.1 to 1.5 times the normal time).
(2) No overvoltage or oscillating frequency.
Slight increase in drop-out time (1.1 to 1.5 times the normal time).

Characteristics: page B7/15
Dimensions: page B7/16
Schemes: page B7/17

Control relays for a.c. control circuit

- Width of control relays: 45 mm.
- Mounting on 35 mm ⎽ rail or Ø4 screw fixing.
- Screws in the open “ready-to-tighten” position.

PB123768.eps

CA2KN22●●

Control circuit Consumption	Auxiliary contacts		Basic reference, to be completed by adding the voltage code [1]
Screw clamp connections			
4.5 VA	4	–	**CA2KN40●●**
	3	1	**CA2KN31●●**
	2	2	**CA2KN22●●**
Spring terminal connections (insert "3" before the voltage code)			
4.5 VA	4	–	**CA2KN403●●**
	3	1	**CA2KN313●●**
	2	2	**CA2KN223●●**
Faston connectors, 1 x 6.35 or 2 x 2.8 (insert "7" before the voltage code)			
4.5 VA	4	–	**CA2KN407●●**
	3	1	**CA2KN317●●**
	2	2	**CA2KN227●●**
Solder pins for printed circuit boards (insert "5" before the voltage code)			
4.5 VA	4	–	**CA2KN405●●**
	3	1	**CA2KN315●●**
	2	2	**CA2KN225●●**

PB123769.tif

CA2KN●●5●●

Control relays for d.c. control circuit

- Mounting on 35 mm ⎽ rail or Ø4 screw fixing.
- Screws in the open “ready-to-tighten” position.

Screw clamp connections			
3 W	4	–	**CA3KN40●●**
	3	1	**CA3KN31●●**
	2	2	**CA3KN22●●**
Spring terminal connections			
3 W	4	–	**CA3KN403●●**
	3	1	**CA3KN313●●**
	2	2	**CA3KN223●●**
Solder pins for printed circuit boards			
3 W	4	–	**CA3KN405●●**
	3	1	**CA3KN315●●**
	2	2	**CA3KN225●●**

PB123770.tif

CA3KN●●3●●

(1) Please check the availability of your variant in the index page B7/12. The SEARCH function of your viewer can be used.
Standard control circuit voltages (for other voltages, please consult your Regional Sales Office):

Control relays CA2K (0.8...1.15 Uc) *(0.85...1.1 Uc)*

Volts ∿ 50/60 Hz	**12**	**20**	**24**[2]	**36**	**42**	**48**	**110**	**115**	**127**	**220/ 230**	**230**	**230/ 240**	**380/ 400**	**400**	**400/ 415**	**440**	**500**	**660/ 690**
Code	J7	Z7	B7	C7	D7	E7	F7	FE7	FC7	M7	P7	U7	Q7	V7	N7	R7	S7	Y7

Up to and including 240 V, coil with integral suppression device available: add **2** to the code required. Example: **J72**

Control relays CA3K (0.8...1.15 Uc)

Volts ⎓	**12**	**20**	**24**[2]	**36**	**48**	**60**	**72**	**100**	**110**	**125**	**200**	**220**	**230**	**240**	**250**
Code	JD	ZD	BD	CD	ED	ND	SD	KD	FD	GD	LD	MD	MPD	MUD	UD

Coil with integral suppression device available: add **3** to the code required. Example: **JD3**.

(2) When connecting an electronic sensor or timer in series with the coil of the control relay, select a 20 V coil (∿ code Z7, ⎓ code ZD) so as to compensate for the incurred voltage drop.

Control relays

Characteristics: pages B7/18 and B7/19
Dimensions: page B7/20
Schemes: page B7/21

PB123771.eps

CA4KN40●●●

Low consumption control relays d.c. control circuit

- Width of control relays: 45 mm.
- Mounting on 35 mm ⎍ rail or Ø4 screw fixing.
- Screws in the open “ready-to-tighten” position.

Control circuit Consumption	Auxiliary contacts		Basic reference, to be completed by adding the voltage code [1]
Screw clamp connections			
1.8 W	4	–	**CA4KN40●●**
	3	1	**CA4KN31●●**
	2	2	**CA4KN22●●**
Spring terminal connections (insert "3" before the voltage code)			
1.8 W	4	–	**CA4KN403●●**
	3	1	**CA4KN313●●**
	2	2	**CA4KN223●●**
Faston connectors, 1 x 6.35 or 2 x 2.8 (insert "7" before the voltage code)			
1.8 W	4	–	**CA4KN407●●**
	3	1	**CA4KN317●●**
	2	2	**CA4KN227●●**
Solder pins for printed circuit boards (insert "5" before the voltage code)			
1.8 W	4	–	**CA4KN405●●**
	3	1	**CA4KN315●●**
	2	2	**CA4KN225●●**

(1) Please check the availability of your variant in the index page B7/12. The SEARCH function of your viewer can be used.
Standard control circuit voltages (for other voltages, please consult your Regional Sales Office):
Control relays CA4K (Wide range coil: 0.7...1.3 Uc)

Volts ⎓	**12**	**20**	**24**	**48**	**72**	**110**	**120**
Code	JW3	ZW3	BW3	EW3	SW3	FW3	GW3

Coil with integral suppression device fitted as standard, by bi-directional peak limiting diode.

Characteristics: pages B7/18 and B7/19
Dimensions: page B7/20
Schemes: page B7/21

PB121750.tif

LA1KN22

PB123795.eps

LA1KN●●3

PB123796.eps

LA1KN●●7

Instantaneous auxiliary contact blocks

Clip-on front mounting, 1 per control relay

Connection	Composition		Reference
Screw clamp terminals	2	–	**LA1KN20**
	–	2	**LA1KN02**
	1	1	**LA1KN11**
	4	–	**LA1KN40** (1)
	3	1	**LA1KN31** (1)
	2	2	**LA1KN22** (1)
	1	3	**LA1KN13** (1)
	–	4	**LA1KN04** (1)
Spring terminals	2	–	**LA1KN203**
	–	2	**LA1KN023**
	1	1	**LA1KN113**
	4	–	**LA1KN403** (1)
	3	1	**LA1KN313** (1)
	2	2	**LA1KN223** (1)
	1	3	**LA1KN133** (1)
	–	4	**LA1KN043** (1)
Faston connectors 1 x 6.35 or 2 x 2.8	2	–	**LA1KN207**
	4	–	**LA1KN407** (1)
	3	1	**LA1KN317** (1)

Electronic time delay contact blocks

- Relay output with common point changeover contact, ∿ or ⎓ 240 V, 2 A maximum
- Control voltage 0.85...1.1 Uc
- Maximum switching capacity 250 VA or 150 W
- Operating temperature -10...+ 60 °C
- Reset time: 1.5 s during the time delay period 0.5 s after the time delay period

Clip-on front mounting, 1 per control relay

Voltage	Type	Timing range	Composition	Reference
V		s		
∿ or ⎓ 24...48	On-delay	1...30	1	**LA2KT2E**
∿ 110...240	On-delay	1...30	1	**LA2KT2U**

Other versions Electronic timers type RE4.
Please consult your Regional Sales Office.

*(1) Block of 4 contacts for use on **CA2K** and **CA3K**.*

PB123797.eps

LA2KT2E

Control relays

Characteristics: page B7/19
Dimensions: page B7/20
Schemes: page B7/21

Life Is On Schneider Electric

Product references

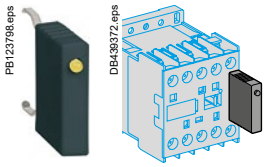

LA4KC1B

Suppressor modules incorporating LED indicator

Mounting and connection	Type	For voltages	Sold in lots of	Unit reference
Clips onto front of relay with locating device. No tools required.	Varistor [1]	∿ and ⎓ 12...24 V	5	**LA4KE1B**
		∿ and ⎓ 32...48 V	5	**LA4KE1E**
		∿ and ⎓ 50...129 V	5	**LA4KE1FC**
		∿ and ⎓ 130...250 V	5	**LA4KE1UG**
	Diode + Zener diode [2]	⎓ 12...24 V	5	**LA4KC1B**
		⎓ 32...48 V	5	**LA4KC1E**
	RC [3]	∿ 110...250 V	5	**LA4KA1U**

Mounting accessories

Description	Application		Sold in lots of	Unit reference
Mounting plates	On 2 ⊏⊐ rails	110/120 mm fixing centres	10	**DX1AP25**

Marking accessories

LA9D90

AB1R9

Description	Application		Sold in lots of	Unit reference
Marker holder	Clip-on fixing on front face	–	100	**LA9D90**
Clip-in markers	4 maximum per relay	Strips of 10 identical numbers 0 to 9	25	**AB1R●** [4]
		Strips of 10 identical capital letters A to Z	25	**AB1G●** [4]

(1) Protection provided by limiting the transient voltage to 2 Uc max.
Maximum reduction of transient voltage peaks.
Slight increase in drop-out time (1.1 to 1.5 times the normal time).
(2) No overvoltage or oscillating frequency.
Polarised component.
Slight increase in drop-out time (1.1 to 1.5 times the normal time).
(3) Protection by limiting the transient voltage to 3 Uc max. and limitation of the oscillating frequency.
Slight increase in drop-out time (1.2 to 2 times the normal time).
(4) Complete the reference by replacing the dot with the required character.

Dimensions:
page B7/20

Schemes:
page B7/21

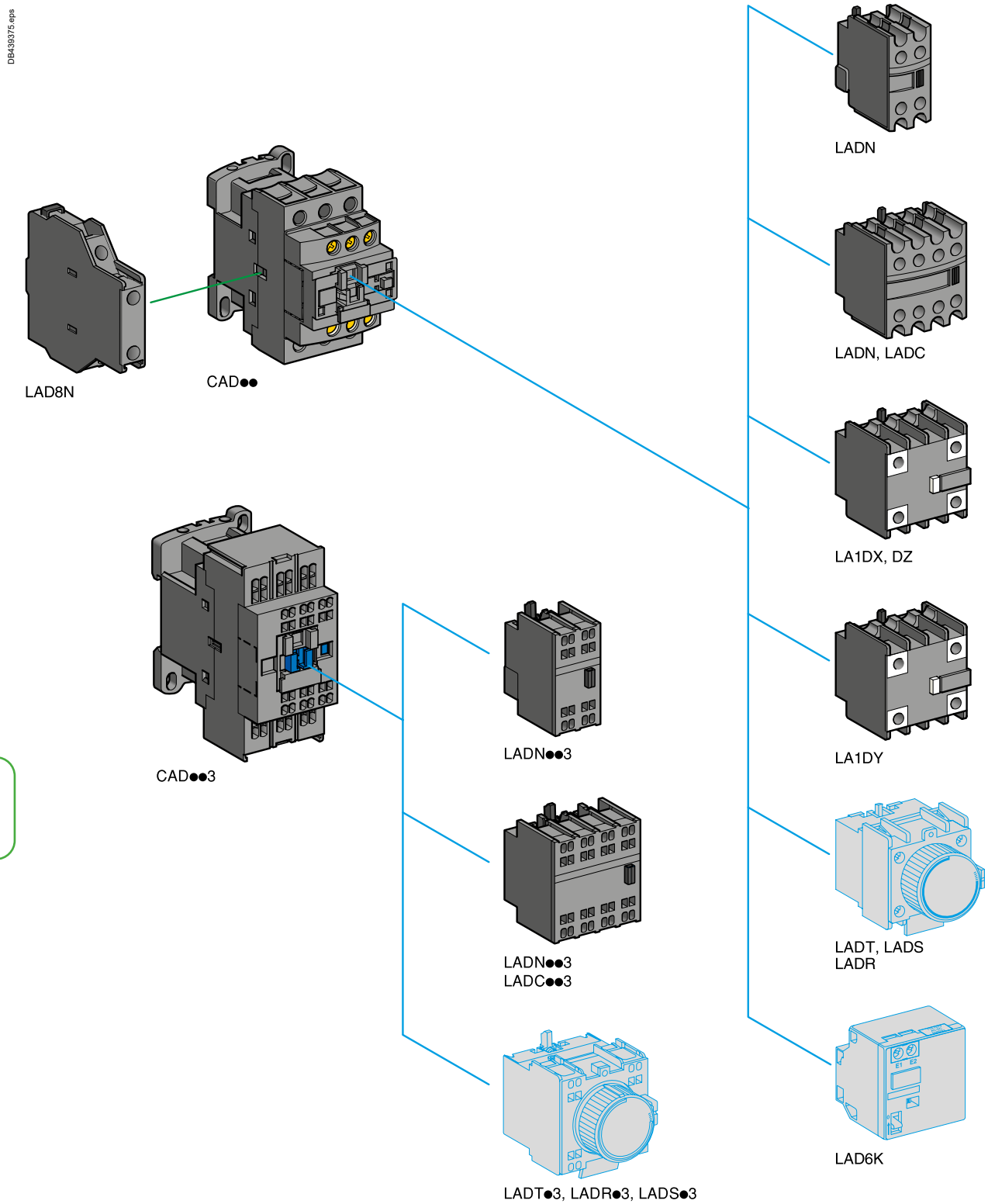

See page opposite for mounting possibilities according to control relay type and rating

Life Is On Schneider Electric

PB121687.eps

CAD50●●

PB121688.eps

CAD503●●

PB121689.eps

LADN22

PB123800.eps

LA1DY20

Control relays for connection by screw clamp terminals

Type	Number of contacts	Composition		Basic reference, to be completed by adding the control voltage code (1)
Instantaneous	5	5	–	**CAD50●●** (3)
		3	2	**CAD32●●** (3)

Control relays for connection by spring terminals

Instantaneous	5	5	–	**CAD503●●**
		3	2	**CAD323●●**

Instantaneous auxiliary contact blocks for connection by screw clamp terminals

For use in normal operating environments

Number of contacts	Maximum number per relay Clip-on mounting front	side	Composition		Reference	
2	1	–	1	1	**LADN11**	
	–	1 on LH side	1	1	**LAD8N11** (6)	
	1	–	2	–	**LADN20**	
	–	1 on LH side	2	–	**LAD8N20** (6)	
	1	–	–	2	**LADN02**	
	–	1 on LH side	–	2	**LAD8N02** (6)	
4 (4)	1	–	2	2	**LADN22**	**LADN22S** (7)
			1	3	**LADN13**	
			4	–	**LADN40**	
			–	4	**LADN04**	
			3	1	**LADN31**	
4 (4)	1	–	2	2	**LADC22**	

Including 1 N/O and 1 N/C make before break.

With dust and damp protected contacts, for use in particularly harsh industrial environments

Number of contacts	Maximum number per relay Front mounting	Composition protected (5)			not protected		Reference
2	1	2	–	–	–	–	**LA1DX20**
		–	2	–	–	–	**LA1DX02**
		2	–	2	–	–	**LA1DY20** (8)
4 (4)	1	2	–	–	2	–	**LA1DZ40**
		2	–	–	1	1	**LA1DZ31**

Instantaneous auxiliary contact blocks for connection by spring terminals

This type of connection is not possible for contact blocks LAD 8 and blocks with dust and damp protected contacts.
For all other instantaneous auxiliary contact blocks, add the digit **3** to the end of the references selected above.
Example: **LADN11** becomes **LADN113**.

(1) Please check the availability of your variant in the index page B7/12. The SEARCH function of your viewer can be used.
Standard control circuit voltages (for other voltages, please consult your Regional Sales Office).

a.c. supply												
Volts ∿	**24**	**42**	**48**	**110**	**115**	**220**	**230**	**240**	**380**	**400**	**415**	**440**
50/60 Hz	B7	D7	E7	F7	FE7	M7	P7	U7	Q7	V7	N7	R7

d.c. supply (coils with integral suppression device fitted as standard)											
Volts ⎓	**12**	**24**	**36**	**48**	**60**	**72**	**110**	**125**	**220**	**250**	**440**
U from 0.7 to 1.25 Uc	JD	BD	CD	ED	ND	SD	FD	GD	MD	UD	RD

Low consumption (coils with integral suppression device fitted as standard)								
Volts ⎓	**5**	**12**	**20**	**24**	**48**	**110**	**220**	**250**
Code	AL	JL	ZL	BL	EL	FL	ML	UL

(2) LC: low consumption.
*(3) To order control relays with connection by lugs, add the digit **6** to the end of the selected reference.*
Example: CAD50●● becomes CAD506●●.
(4) Blocks with 4 auxiliary contacts cannot be used on low consumption control relays.
(5) Product fitted with 4 earth screen continuity terminals.
(6) These contact blocks are allowed with AC coil control relay only.
(7) With red front face - for safety chain indication.
(8) With 2 earth screen continuity poles.

Control relays

Characteristics: pages B7/22 to B7/24
Curves: page B7/25
Dimensions: page B7/26
Schemes: page B7/27

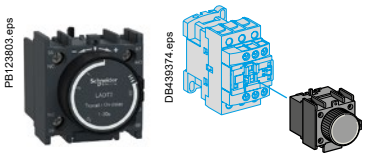

LADT2

Time delay auxiliary contact blocks for connection by screw clamp terminals [1]

Number and type of contacts	Maximum number per relay	Time delay		Reference
	Front mounting	Type	Range	
1 N/C and 1 N/O	1	On-delay	0.3…3 s [2]	**LADT0**
			1…30 s	**LADT2**
			10…180 s	**LADT4**
			1…30 s [3]	**LADS2**
		Off-delay	0.3…3 s [2]	**LADR0**
			1…30 s	**LADR2**
			10…180 s	**LADR4**

(Sealing cover: see page B8/45)

Time delay auxiliary contact blocks for connection by spring terminals

Add the digit **3** to the references selected above. Example: **LADT0** becomes **LADT03**.

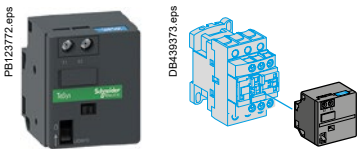

LAD6K10M

Mechanical latch blocks [4]

Unlatching control	Maximum number per relay	Basic reference to be completed [5]
	Front mounting	
Manual or electric	1	**LAD6K10●**

Suppressor modules

These modules clip onto the top of the control relay and the electrical connection is instantly made. Fitting of an input module is still possible.

RC circuits (Resistor-Capacitor)

- Effective protection for circuits highly sensitive to "high frequency" interference.
- Voltage limited to 3 Uc maximum and oscillating frequency limited to 400 Hz maximum.
- Slight time delay on drop-out (1.2 to 2 times the normal time).

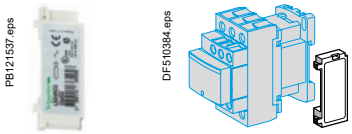

LAD4RCU

For mounting on	Operational voltage	Reference
CAD ∿	∿ 24…48 V	**LAD4RCE**
	∿ 50…127 V	**LAD4RCG**
	∿ 110…250 V	**LAD4RCU**

Varistors (peak limiting)

- Protection provided by limiting the transient voltage value to 2Uc maximum.
- Maximum reduction of transient voltage peaks.
- Slight time delay on drop-out (1.1 to 1.5 times the normal time).

CAD ∿	∿ 24…48 V	**LAD4VE**
	∿ 50…127 V	**LAD4VG**
	∿ 110…250 V	**LAD4VU**

Freewheel diode

- No overvoltage or oscillating frequency.
- Increase in drop-out time (6 to 10 times the normal time).
- Polarised component.

CAD ⎓	⎓ 5…600 V	**LAD4DDL** [6]

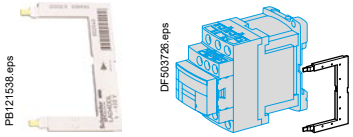

LAD4DDL

Bidirectional peak limiting diode [7]

- Protection provided by limiting the transient overvoltage value to 2Uc maximum.
- Maximum reduction of transient voltage peaks.

CAD ∿	∿ 24 V	**LAD4TB**
	∿ 72 V	**LAD4TS**
CAD ⎓	⎓ 24 V	**LAD4TBDL**
	⎓ 72 V	**LAD4TSDL**
	⎓ 125 V	**LAD4TGDL**
	⎓ 250 V	**LAD4TUDL**

(1) These contact blocks cannot be used on low consumption control relays.
(2) With extended scale from 0.1 to 6 s.
(3) With switching time of 40 ms ±15 ms between opening of the N/C contact and closing of the N/O contact.
(4) Power should not be simultaneously applied or maintained to the mechanical latching block of the CADN. The duration of the control signal to the mechanical latching block and the CADN should be ≥ 100 ms.
(5) Standard control circuit voltages (for other voltages, please consult your Regional Sales Office):

Volts ∿ and ⎓	24	32/36	42/48	60/72	100	110/127	220/240	256/277	380/415
Code	B	C	E	EN	K	F	M	U	Q

(6) Not compatible with low consumption control relays.
*(7) **CAD●●** ⎓ and low consumption control relays are fitted with a built-in bi-directional peak limiting diode suppressor as standard. On control relays produced after 15th July 2004, this diode is removable. It can therefore be replaced by the user (see references **LAD4T●●●** above). It can also be replaced by a freewheel diode **LAD4DDL**.*

Characteristics: pages B7/22 to B7/24
Illustrations: page B7/8
Curves: page B7/25
Dimensions: page B7/26
Schemes: page B7/27

PB121532.eps

810535.eps

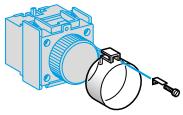

LA9D901

PB123804.eps

LAD9ET1S

Accessories (to be ordered separately)

Description	For mounting on	Sold in lots of	Unit reference
For marking			
Sheet of 64 blank legends, self-adhesive, 8 x 33 mm	CAD, LAD (4 contacts)	10	**LAD21**
Sheet of 112 blank legends, self-adhesive, 8 x 12 mm	LAD (2 contacts), LADT		**LAD22**
"SIS Label" labelling software for legends LAD21 and LAD22, supplied on CD-Rom	Multi-language version: English, French, German, Italian, Spanish	1	**XBY2U**
Legend holder, snap-in, 8 x 18 mm	LC1D09...38 LC1DT20...40 LADN (4 contacts) LADT, LADR	100	**LAD90**
For protection			
Sealing cover	LADT, LADR	1	**LA9D901**
Safety cover preventing access to the moving contact carrier	CAD	1	**LAD9ET1**
Red cover (for safety chain indication)	CAD	1	**LAD9ET1S**

Spare parts: coils

Specifications

- Average consumption at 20 °C:
  - inrush (cos φ = 0.75) 50/60 Hz: 70 VA at 50 Hz,
  - sealed (cos φ = 0.3) 50/60 Hz: 8 VA at 60 Hz,
- Operating range (θ < 60 °C): 0.85 to 1.1 Uc

Control circuit voltage Uc	Average resistance at 20 °C ±10 %	Inductance of closed circuit	Reference (1)
V	Ω	H	
			50/60 Hz
12	1.33	0.05	**LXD1J7**
24	5.37	0.22	**LXD1B7**
32	10.1	0.39	**LXD1C7**
42	17	0.67	**LXD1D7**
48	21.7	0.87	**LXD1E7**
110	124.1	4.6	**LXD1F7**
115	129.8	5	**LXD1FE7**
120	150.6	5.4	**LXD1G7** (2)
200	410.7	15	**LXD1L7**
208	430.4	16	**LXD1LE7** (2)
220	515.4	18	**LXD1M7** (3)
230	538.6	20	**LXD1P7**
240	562.3	22	**LXD1U7**
277	800.7	29	**LXD1W7** (2)
380	1551	55	**LXD1Q7** (4)
400	1633	60	**LXD1V7**
415	1694	65	**LXD1N7**
440	1993	73	**LXD1R7**
480	2398	87	**LXD1T7** (2)
500	2499	95	**LXD1S7**
575	3294	125	**LXD1SC7**
600	3810	136	**LXD1X7**
660	4656	165	**LXD1YC7**
690	5020	180	**LXD1Y7**

(1) The last 2 digits in the reference represent the voltage code.
(2) Coil for use only on 60 Hz.
*(3) Suitable for use on **230 V** / 50 Hz. In this case, apply a coefficient of 0.6 to the mechanical durability of the contactor (see pages B8/86 and B8/88).*
*(4) Suitable for use on **400 V** / 50 Hz. In this case, apply a coefficient of 0.6 to the mechanical durability of the contactor (see pages B8/86 and B8/88).*

Product references

CA2KN223B7	CA2SK20E7	CA3SK20BD	CAD32JL
CA2KN223F7	CA2SK20F7	CA3SK20JD	CAD32L7
CA2KN223P7	CA2SK20G7	CA4KN223BW3	CAD32M7
CA2KN223P72	CA2SK20M7	CA4KN22BW3	CAD32MD
CA2KN22B7	CA2SK20P7	CA4KN22EW3	CAD32N7
CA2KN22B72	CA2SK20Q7	CA4KN22FW3	CAD32P7
CA2KN22D7	CA2SK20T7	CA4KN22SW3	CAD32Q7
CA2KN22E7	CA2SK20U7	CA4KN313BW3	CAD32R7
CA2KN22F7	CA2SK20UE7	CA4KN31BW3	CAD32SD
CA2KN22F72	CA2SKE20B7	CA4KN31FW3	CAD32T7
CA2KN22FC7	CA2SKE20G7	CA4KN31SW3	CAD32U7
CA2KN22FE7	CA2SKE20M7	CA4KN403BW3	CAD32UD
CA2KN22G7	CA2SKE20P7	CA4KN40BW3	CAD32V7
CA2KN22G72	CA2SKE20Q7	CA4KN40EW3	CAD32X7
CA2KN22L7	CA2SKE20T7	CA4KN40FW3	CAD32XD
CA2KN22M7	CA2SKE20U7	CAD323B7	CAD32Y7
CA2KN22M72	CA3KN223BD	CAD323BD	CAD503BD
CA2KN22N7	CA3KN223BD3	CAD323BL	CAD503BL
CA2KN22P7	CA3KN22BD	CAD323E7	CAD503FD
CA2KN22P72	CA3KN22BD3	CAD323F7	CAD503FE7
CA2KN22Q7	CA3KN22ED	CAD323FE7	CAD503P7
CA2KN22R7	CA3KN22ED3	CAD323G7	CAD506B7
CA2KN22T7	CA3KN22FD	CAD323JD	CAD506BD
CA2KN22U7	CA3KN22FD3	CAD323P7	CAD506ED
CA2KN22V7	CA3KN22GD	CAD326B7	CAD506F7
CA2KN313P72	CA3KN22GD3	CAD326BD	CAD506FD
CA2KN315F7	CA3KN22JD	CAD326BL	CAD506KD
CA2KN31B7	CA3KN22MD	CAD326CD	CAD506M7
CA2KN31D7	CA3KN22MD3	CAD326E7	CAD506MD
CA2KN31E7	CA3KN22ND	CAD326F7	CAD506P7
CA2KN31F7	CA3KN22SD	CAD326FD	CAD506R7
CA2KN31G7	CA3KN313BD	CAD326G7	CAD50B7
CA2KN31K7	CA3KN313BD3	CAD326GD	CAD50BD
CA2KN31M7	CA3KN315BD	CAD326K7	CAD50BL
CA2KN31M72	CA3KN317SD	CAD326KD	CAD50D7
CA2KN31P7	CA3KN31BD	CAD326L7	CAD50E7
CA2KN31P72	CA3KN31BD3	CAD326M7	CAD50ED
CA2KN31U7	CA3KN31ED	CAD326MD	CAD50F7
CA2KN31V7	CA3KN31ED3	CAD326P7	CAD50FD
CA2KN40B7	CA3KN31FD	CAD326Q7	CAD50FE7
CA2KN40B72	CA3KN31FD3	CAD326R7	CAD50G7
CA2KN40E7	CA3KN31GD	CAD326SD	CAD50GD
CA2KN40F7	CA3KN31GD3	CAD326SL	CAD50K7
CA2KN40FC72	CA3KN31JD	CAD326U7	CAD50L7
CA2KN40G7	CA3KN31MD	CAD326V7	CAD50M7
CA2KN40M7	CA3KN31MD3	CAD326VD	CAD50MD
CA2KN40N7	CA3KN31ND3	CAD32B7	CAD50N7
CA2KN40P7	CA3KN31UD	CAD32BD	CAD50P7
CA2KN40T7	CA3KN403BD	CAD32BL	CAD50Q7
CA2KN40U7	CA3KN403BD3	CAD32CD	CAD50R7
CA2SK11B7	CA3KN40BD	CAD32D7	CAD50SD
CA2SK11E7	CA3KN40BD3	CAD32E7	CAD50U7
CA2SK11F7	CA3KN40ED	CAD32ED	CAD50UD
CA2SK11G7	CA3KN40ED3	CAD32EL	CAD50Y7
CA2SK11M7	CA3KN40EPD	CAD32F7	
CA2SK11P7	CA3KN40FD	CAD32FC7	
CA2SK11T7	CA3KN40FD3	CAD32FD	
CA2SK11U7	CA3KN40GD	CAD32FE7	
CA2SK11UE7	CA3KN40GD3	CAD32FL	
CA2SK11V7	CA3KN40MD	CAD32G7	
CA2SK20B7	CA3KN40MD3	CAD32GD	
CA2SK20D7	CA3SK11BD	CAD32JD	

This document is current. Click on the product reference to get the most recent availability status (hyperlink to **se.com** product datasheet).
If your product variant is no longer available, please consult your distributor or regional sales office.

Life Is On Schneider Electric

Technical Data for Designers

Contents

TeSys SK Mini control relays:
> characteristics ..... B7/14 and B7/15
> dimensions B7/16
> schemes B7/17

TeSys K Control relays:
> characteristics ..... B7/18 and B7/19
> dimensions B7/20
> schemes B7/21

Deca Control relays:
> characteristics ..... B7/22 to B7/24
> curves B7/25
> dimensions B7/26
> schemes B7/27

Characteristics

Environment

Rated insulation voltage (Ui)	Conforming to IEC 60947, CSA 22-2 n° 14, UL 508	**V**	690
Conforming to standards			IEC/EN 60947-5-1, UL 60947-5-1, CSA C22.2 n° 60947-5-1, GB/T 14048.5
Approvals			cULus, EAC, UKCA, CB certification
Degree of protection	Conforming to IEC 60529		Protection against direct finger contact IP2X
Ambient air temperature around the device	Storage	**°C**	-50…+70
	Operation	**°C**	-20…+50
Maximum operating altitude	Without derating	**m**	2000

Operating position

Vertical axis

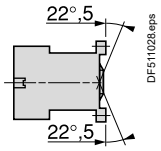

Without derating

Horizontal axis

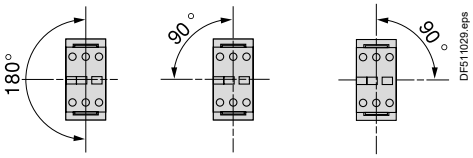

Without derating

			Min.	Max.
Connection by connectors	Solid cable	**mm²**	1 x 1.5 or 2 x 1.5	1 x 6 or 2 x 4
	Flexible cable without cable end	**mm²**	1 x 0.5 or 2 x 0.35	1 x 6 or 2 x 2.5
	Flexible cable with cable end	**mm²**	1 x 0.35 or 2 x 0.35	1 x 6 or 2 x 1.5
Tightening torque	Pozidriv n° 1 head	**N.m**	0.8	
Terminal referencing	Conforming to standards EN 50005 and EN 50011		Up to 4 contacts	

Control circuit characteristics

Control relay			CA2SK	CA2SKE	CA3SK
Rated control circuit voltage (Uc)		**V**	∿ 24…400		⎓ 12…72
Control voltage limits (≤ 50 °C)	For operation		0.85…1.1 Uc		0.85…1.1 Uc
	For drop-out		≤ 0.20 Uc		≤ 0.10 Uc
Average consumption at 20 °C and at Uc	Inrush		16 VA	23 VA	2.2 W
	Sealed		4.2 VA	4.9 VA	2.2 W
Heat dissipation		**W**	1.4	1.5	2.2
Operating time at 20 °C and at Uc	Between coil energisation and opening of the N/C contacts	**ms**	8…16		10…18
	closing of the N/O contacts	**ms**	7…14		8…12
	Between coil de-energisation and opening of the N/O contacts	**ms**	6…8		4…6
	closing of the N/C contacts	**ms**	8…10		6…8
Maximum operating rate	In operating cycles per hour		1200		1200
Mechanical durability at Uc in millions of operating cycles	50/60 Hz coil		10		–
	Standard ⎓ coil		–		10

References:
pages B7/2 and B7/3
Dimensions:
page B7/16
Schemes:
page B7/17

Characteristics

Auxiliary contact characteristics of mini control relays and instantaneous contact blocks

Rated operational voltage (Ue)		**V**	Up to 690
Rated insulation voltage (Ui)	Conforming to IEC 96047	**V**	690
Conventional rated thermal current (Ith)	For ambient temperature ≤ 55 °C	**A**	10
Minimum switching capacity	Umin	**V**	17
	Imin	**mA**	10
Frequency of the operational current		**Hz**	Up to 400
Short-circuit protection	Conforming to IEC 60947, gl fuse	**A**	10

Operational power of contacts conforming to IEC 60947

		a.c. supply, category AC-15 Electrical durability (valid for up to 3600 operating cycles/hour) on an inductive load such as the coil of an electromagnet: making current (cos φ 0.7) = 10 times the power broken (cos φ 0.4).							d.c. supply, category DC-13 Electrical durability (valid for up to 1200 operating cycles/hour) on an inductive load such as the coil of an electromagnet, without economy resistor, the time constant increasing with the load.					
	V	**24**	**48**	**110/127**	**220/230**	**380/400**	**440**		**V**	**24**	**48**	**110**	**220**	**440**
1 million operating cycles	**VA**	48	96	240	440	800	880		**W**	120	80	60	52	51
3 million operating cycles	**VA**	17	34	86	158	288	317		**W**	55	38	30	28	26
10 million operating cycles	**VA**	7	14	36	66	120	132		**W**	15	11	9	8	7
Occasional making capacity	**VA**	1000	2050	5000	10000	14000	13 000		**W**	720	600	400	300	230

References: page B7/3
Dimensions: page B7/16
Schemes: page B7/17

Dimensions and mounting

Dimensions

Mini control relays

CA2SK and CA3SK

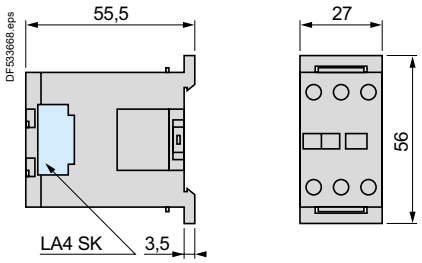

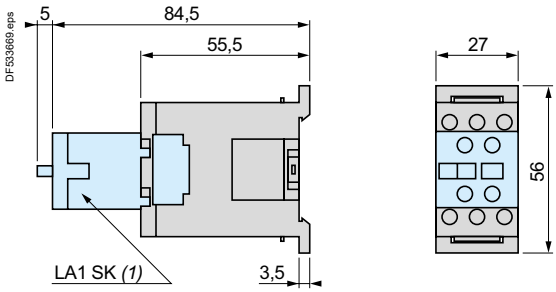

(1) Only on CA2SK20.

Mounting

Mini control relays

CA2SK and CA3SK

On mounting rail NSYDR200BD or NSYDR200 (⎓ 35 mm)

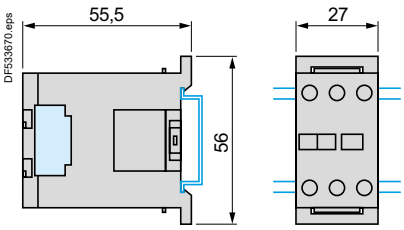

Dimensions

CA2SKE

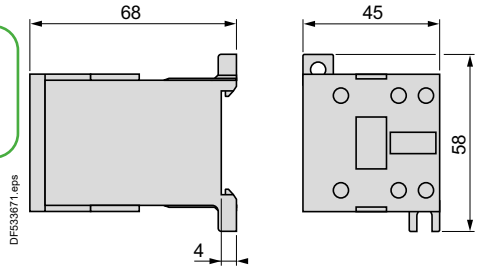

Mounting

CA2SKE

On panel

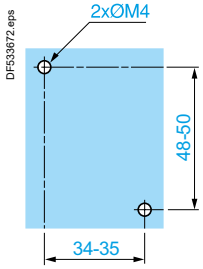

On mounting rail NSYDR200BD or NSYDR200 (⎓ 35 mm)

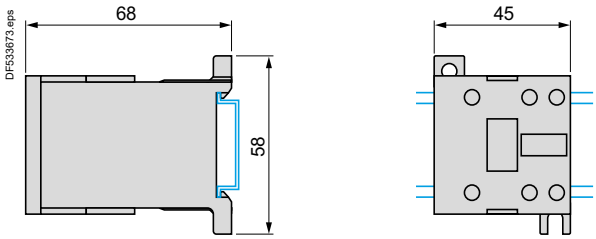

Ref.
Control relays

Schemes

Schemes

CA2SK20, CA3SK20
2 N/O

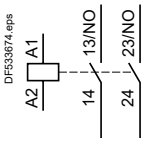

CA2SK11, CA3SK11
1 N/O + 1 N/C

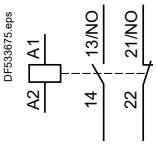

CA2SKE
2 N/O

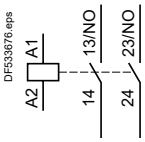

CA2SKE
Function diagram

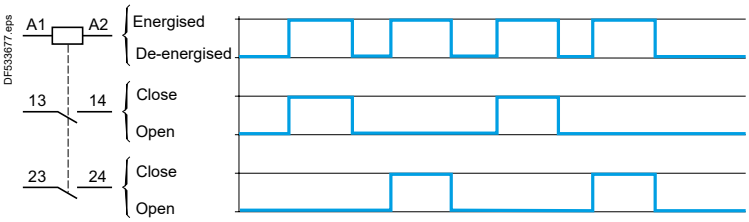

Instantaneous auxiliary contacts

2 N/O
LA1SK20

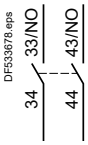

2 N/C
LA1SK02

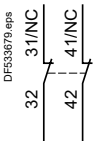

1 N/O + 1 N/C
LA1SK11

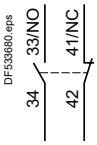

References:
pages B7/2 and B7/3
Characteristics:
pages B7/14 and B7/15
Dimensions:
page B7/16

Environment

Conforming to standards			IEC/EN 60947-5-1, UL 60947-5-1, CSA C22.2 n° 60947-5-1, GB/T 14048.5		
Product certifications			UL, CSA, CCC, EAC, UKCA, CB certification		
Operating positions			**Vertical axis**	**Horizontal axis**	
			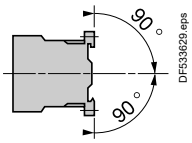	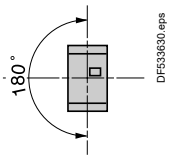	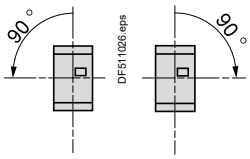
			Without derating	Without derating	Possible positions for **CA2K** only, with derating, please consult your Regional Sales Office.
Connection			**Min.**	**Max.**	**Max. to IEC 60947**
Screw clamp connections	Solid cable	**mm²**	1 x 1.5	2 x 4	1 x 4 + 1 x 2.5
	Flexible cable without cable end	**mm²**	1 x 0.75	2 x 4	2 x 2.5
	Flexible cable with cable end	**mm²**	1 x 0.34	1 x 1.5 + 1 x 2.5	1 x 1.5 + 1 x 2.5
Spring terminals	Solid cable	**mm²**	1 x 0.75	1 x 1.5	2 x 1.5
	Flexible cable without cable end	**mm²**	1 x 0.75	1 x 1.5	2 x 1.5
Faston connectors	Clip	**mm**	2 x 2.8 or 1 x 6.35		
Solder pins for printed circuit board	With locating device between power and control circuits		4 mm x 35 microns		
Tightening torque	Philips head n° 2 and Ø6	**N.m**	0.8		
Terminal referencing	Conforming to standards EN 50005 and EN 50011		Up to 8 contacts		
Degree of protection	Conforming to IEC 60529		Protection against direct finger contact IP2x (devices with screw clamp terminals or pins for printed circuit board)		
Ambient air temperature around the device	Storage	**°C**	-50...+80		
	Operation	**°C**	-25...+50		
Maximum operating altitude	Without derating	**m**	2000		
Vibration resistance 5...300 Hz Conforming to IEC/EN 60068-2-27	Control relay open		2 gn		
	Control relay closed		4 gn		
Flame resistance	Conforming to IEC 60695-2-11		850 °C		
Shock resistance (1/2 sine wave, 11 ms) Conforming to IEC/EN 60068-2-27	Control relay open		10 gn		
	Control relay closed		15 gn		

Control circuit characteristics

Control relay type			**CA2K**	**CA3K**	**CA4K**
Rated control circuit voltage (Uc)		**V**	∼ 12...690	⎓ 12...250	⎓ 12...120
Control voltage limits (y 50 °C) single voltage coil	For operation		0.8...1.15 Uc	0.8...1.15 Uc	0.7...1.3 Uc
	For drop-out		⩽ 0.2 Uc	⩽ 0.1 Uc	⩽ 0.1 Uc
Mechanical durability at Uc In millions of operating cycles	50/60 Hz coil		10	–	–
	Standard ⎓ coil		–	20	–
	Wide range, low consumption ⎓ coil		–	–	30
Maximum operating rate	In operating cycles per hour		10 000	10 000	6000
Average consumption at 20 °C and at Uc	Inrush		30 VA	3 W	1.8 W
	Sealed		4.5 VA	3 W	1.8 W
Heat dissipation		**W**	1.3	3	1.8
Operating time at 20 °C and at Uc	Between coil energisation and				
	opening of the N/C contacts	**ms**	5...15	25...35	25...35
	closing of the N/O contacts	**ms**	10...20	30...40	30...40
	Between coil de-energisation and				
	opening of the N/O contacts	**ms**	10...20	10	10...20
	closing of the N/C contacts	**ms**	15...25	15	15...25
Maximum immunity to microbreaks		**ms**	2	2	2

References: pages B7/4 to B7/7
Dimensions: page B7/20
Schemes: page B7/21

Characteristics

Contact characteristics of control relays and instantaneous contact blocks

Number of auxiliary contacts	On **CA●K**		4
	On **LA1K**		2 or 4 for **CA2K** and **CA3K,** 2 for **CA4K**
Rated operational voltage (Ue)	Up to	**V**	690
Rated insulation voltage (Ui)	Conforming to IEC 60947	**V**	690
	Conforming to UL 60947-5-1, CSA C22.2 n° 60947-5-1	**V**	600
Conventional thermal current (Ith)	For ambient temperature ≤ 50 °C	**A**	10
Frequency of the operational current		**Hz**	Up to 400
Minimum switching capacity	U min	**V**	17
	I min	**mA**	5
Short-circuit protection	Conforming to IEC 60947, gG fuse	**A**	10
Rated making capacity	Conforming to IEC 60947 I rms	**A**	110
Short-time rating	Permissible for 1 s	**A**	80
	500 ms	**A**	90
	100 ms	**A**	110
Insulation resistance		**MΩ**	> 10
Non-overlap distance	CA●K and LA1K: linked contacts conforming to INRS, BIA and CNA specifications	**mm**	0.5 (see schemes page B7/21)

Operational power of contacts conforming to IEC 60947

a.c. supply, category AC-15

Electrical durability (valid for up to 3600 operating cycles/hour) on an inductive load such as the coil of an electromagnet: making current (cos φ 0.7) = 10 times the power broken (cos φ 0.4)

	V	24	48	110/ 127	220/ 230	380/ 400	440	600/ 690
1 million operating cycles	**VA**	48	96	240	440	800	880	1200
3 million operating cycles	**VA**	17	34	86	158	288	317	500
10 million operating cycles	**VA**	7	14	36	66	120	132	200
Occasional making capacity	**VA**	1000	2050	5000	10000	14000	13000	9000

d.c. supply, category DC-13

Electrical durability (valid for up to 1200 operating cycles/hour) on an inductive load such as the coil of an electromagnet, without economy resistor, the time constant increasing with the load.

	V	24	48	110	220	440	600
1 million operating cycles	**W**	120	80	60	52	51	50
3 million operating cycles	**W**	55	38	30	28	26	25
10 million operating cycles	**W**	15	11	9	8	7	6
Occasional making capacity	**W**	720	600	400	300	230	200

1 Breaking limit of contacts valid for:
■ maximum of 50 operating cycles at 10 s intervals (power broken = making current x cos φ 0.7).

2 Electrical durability of contacts for:
■ 1 million operating cycles (**2a**)
■ 3 million operating cycles (**2b**)
■ 10 million operating cycles (**2c**).

3 Breaking limit of contacts valid for:
■ maximum of 20 operating cycles at 10 s intervals with current passing for 0.5 s per operating cycle.

4 Thermal limit

Power broken in VA

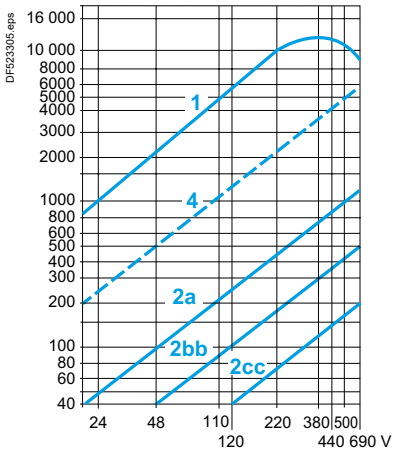

Power broken in W

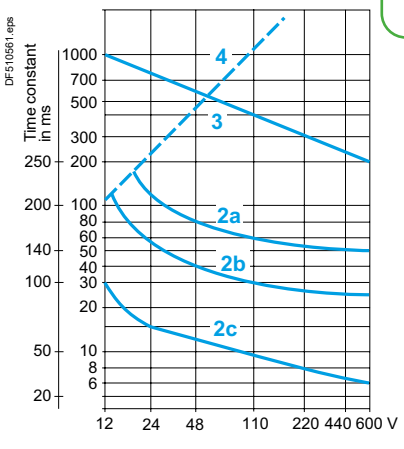

References:
page B7/6

Dimensions:
page B7/20

Schemes:
page B7/21

Dimensions and mounting

Control relays

CA2K, CA3K, CA4K

On panel

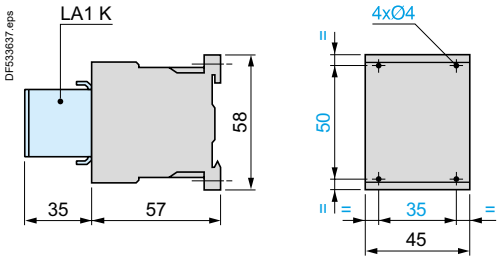

On printed circuit board

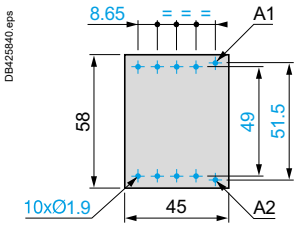

On mounting rail NSYDR200BD or NSYDR200 (⎓ 35 mm)

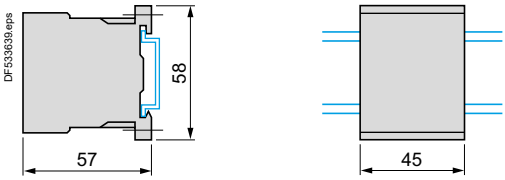

DX1AP25

On asymmetrical rail with clip-on mounting plates

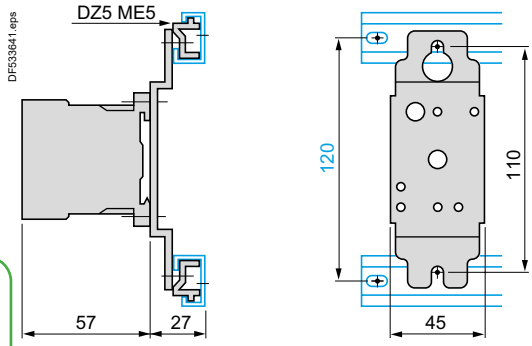

Electronic time delay contact blocks

LA2KT

On control relay

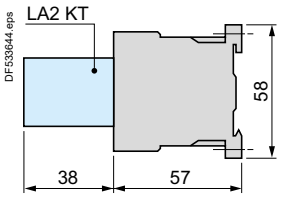

Suppressor modules

LA4K

On control relay

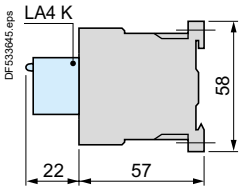

Ref.
Control relays

Schemes

Control relays

CA2K, CA3K, CA4K

4 N/O

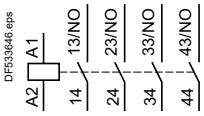

3 N/O + 1 N/C

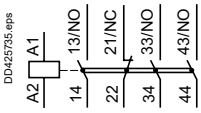

2 N/O + 2 N/C

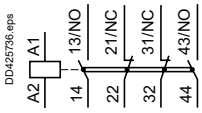

With integral suppression device

CA3K

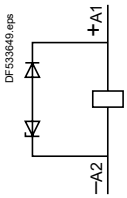

CA4K

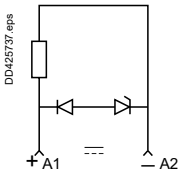

Instantaneous auxiliary contact blocks LA1K

For CA2K, CA3K, CA4K

2 N/O
LA1KN20, LA1 KN207

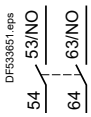

2 N/C
LA1KN02, LA1 KN027

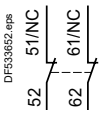

1 N/O + 1 N/C
LA1KN11, LA1 KN117

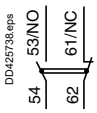

For CA2K, CA3K

4 N/O
LA1KN40, LA1 KN407

3 N/O + 1 N/C
LA1KN31, LA1 KN317

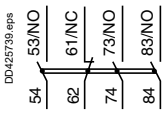

2 N/O + 2 N/C
LA1KN22

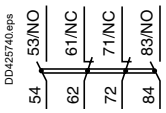

1 N/O + 3 N/C
LA1KN13

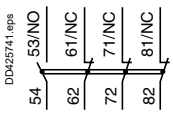

4 N/C
LA1KN04

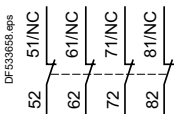

Electronic time delay contact blocks LA2KT

For CA2K, CA3K, CA4K

1 C/O
LA2KT2

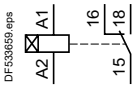

Suppressor modules

LA4KC

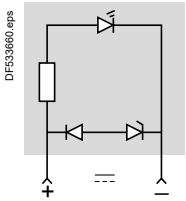

LA4KE

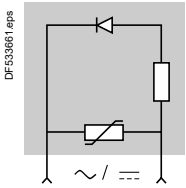

Ref.
Control relays

References:
pages B7/4 to B7/7

Characteristics:
pages B7/18 and B7/19

Dimensions:
page B7/20

Environment

Control relay type				CAD ∿	CAD ⎓	CAD ⎓ low consumption
Rated insulation voltage (Ui)	Conforming to IEC 60947-5-1 Overvoltage category III and degree of pollution 3		**V**	690	690	690
	Conforming to UL, CSA		**V**	600	600	600
Rated impulse withstand voltage (Uimp)	Conforming to IEC 60947		**kV**	6	6	6
Separation of electrical circuits	Conforming to IEC 60536			Reinforced insulation up to 400 V		
Conforming to standards				IEC/EN 60947-5-1, UL 60947-5-1, CSA C22.2 n° 60947-5-1, GB/T 14048.5		
Product certifications				UL, CSA, CCC, EAC, UKCA, CB certification, EU-RO-MR by DNV-GL		
Degree of protection	Conforming to IEC 60529			Front face protected against direct finger contact IP 2X		Protection against direct finger contact IP 2X
Ambient air temperature around the device	Storage		**°C**	-60…+80		
	Operation (1)		**°C**	-40…+60		
	Allowed (1)		**°C**	+60...+70 at Uc to 1,●● x Uc		
Maximum operating altitude	Without derating		**m**	3000	3000	3000
Operating positions	Without derating in the following positions 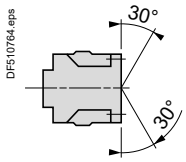			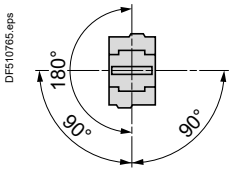	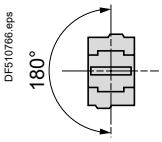	
	Positions that are not allowed				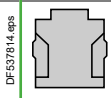	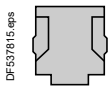
Shock resistance (2) half sine wave for 11ms	Control relay open			10 gn	10 gn	10 gn
	Control relay closed			15 gn	15 gn	15 gn
Vibration resistance (2) 5…300 Hz	Control relay open			2 gn	2 gn	2 gn
	Control relay closed			4 gn	4 gn	4 gn
Screw clamp connections	Flexible conductor without cable end	1 conductor	**mm²**	1…4	1…4	1…4
		2 conductors	**mm²**	1…4	1…4	1…4
	Flexible conductor with cable end	1 conductor	**mm²**	1…4	1…4	1…4
		2 conductors	**mm²**	1…2.5	1…2.5	1…2.5
	Solid conductor without cable end	1 conductor	**mm²**	1…4	1…4	1…4
		2 conductors	**mm²**	1…4	1…4	1…4
	Tightening torque		**N.m**	1.7	1.7	1.7
Spring terminal connections	1 or 2 flexible or rigid conductors without cable end		**mm²**	1…2.5	1…2.5	1…2.5

(1) As per IEC60947-1, operating time and drop out voltage given and tested for -5...+40 °C.
(2) In the least favourable direction, without change of contact state, with coil supplied at Uc.

Ref.
Control relays

Control circuit characteristics

Control relay type			CAD ∼	CAD ⎓	CAD low consumption
Rated control circuit voltage (Uc)		**V**	12…690	12…440	⎓ 5…72
Control voltage limits					
Operation	With coil 50/60 Hz		0.8…1.1 Uc at 50 Hz	–	–
			0.85…1.1 Uc at 60 Hz	–	–
	With standard coil, wide range		–	0.7…1.25 Uc	0.7…1.25 Uc
Drop-out			0.3…0.6 Uc	0.1…0.25 Uc	0.1…0.25 Uc
Average consumption at 20 °C and at Uc	∼ 50/60 Hz (at 50 Hz)	**VA**	Inrush: 70	–	–
			sealed: 8	–	–
	With standard coil	**W**	–	Inrush or sealed: 5.4	Inrush or sealed: 2.4
Operating time (at rated control circuit voltage and at 20 °C)	Between coil energisation and - opening of the N/C contacts	**ms**	4…19	55 ± 15 %	67 ± 15 %
	- closing of the N/O contacts	**ms**	12…22	63 ± 15 %	77 ± 15 %
	Between coil de-energisation and - opening of the N/O contacts	**ms**	4…12	20 ± 20 %	27 ± 20 %
	- closing of the N/C contacts	**ms**	6…17	25 ± 20 %	35 ± 20 %
Short supply failure	Maximum duration without affecting hold-in of the device	**ms**	2	2	2
Maximum operating rate	In operating cycles per second		3	3	3
Mechanical durability In millions of operating cycles	With coil 50/60 Hz (at 50 Hz)		30	–	–
	With standard coil ⎓ wide range		–	30	30
Time constant L/R		**ms**	–	28	40

References: pages B7/9 to B7/11
Curves: page B7/25
Dimensions: page B7/26
Schemes: page B7/27

Characteristics

Characteristics of instantaneous contacts incorporated in the control relay

Number of contacts				5
Rated operational voltage (Ue)	Up to		**V**	690
Rated insulation voltage (Ui)	Conforming to IEC 60947-5-1		**V**	690
	Conforming to UL, CSA		**V**	600
Conventional thermal current (Ith)	For ambient temperature ≤ 60 °C		**A**	10
Frequency of the operational current			**Hz**	25...400
Minimum switching capacity	U min		**V**	17
	I min		**mA**	5
Short-circuit protection	Conforming to IEC 60947-5-1			gG fuse: 10 A
Rated making capacity	Conforming to IEC 60947-5-1	I rms		∿ 140, ⎓ 250
Short-time rating	Permissible for	1 s	**A**	100
		500 ms	**A**	120
		100 ms	**A**	140
Insulation resistance			**MΩ**	> 10
Non-overlap time	Guaranteed between N/C and N/O contacts		**ms**	1.5 (on energisation and on de-energisation)
Tightening torque	Philips head n° 2 and Ø6		**N.m**	1.7
Non-overlap distance				Linked contacts in association with auxiliary contacts LADN
Mechanically linked contacts	Conforming to IEC 60947-5-1			The 3 N/O contacts and the 2 N/C contacts of CAD N32 are linked mechanically by one mobile contact carrier.

References:
pages B7/9 to B7/11
Curves:
page B7/25
Dimensions:
page B7/26
Schemes:
page B7/27

Life Is On Schneider Electric

Curves

Rated operational power of contacts (conforming to IEC 60947-5-1)

a.c. supply, categories AC-14 and AC-15

Electrical durability (valid for up to 3600 operating cycles/hour) on an inductive load such as the coil of an electromagnet:
making current (cos φ 0.7) = 10 times the power broken (cos φ 0.4).

	V	24	48	115	230	400	440	600
1 million operating cycles	VA	60	120	280	560	960	1050	1440
3 million operating cycles	VA	16	32	80	160	280	300	420
10 million operating cycles	VA	4	8	20	40	70	80	100

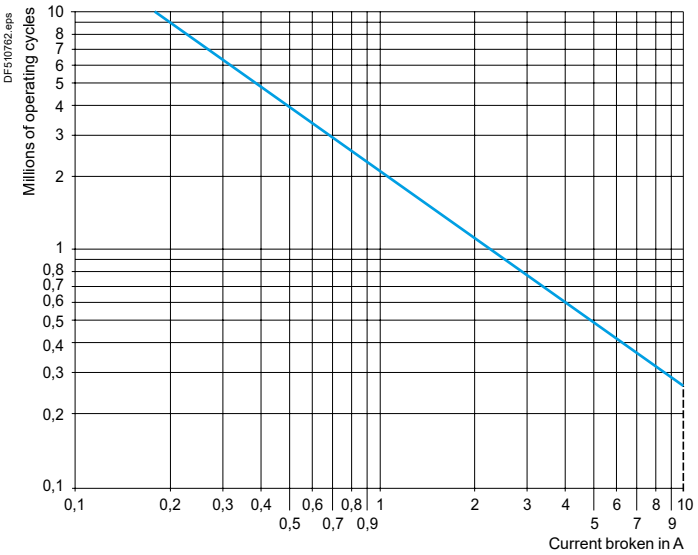

d.c. supply, category DC-13

Electrical durability (valid for up to 1200 operating cycles/hour) on an inductive load such as the coil of an electromagnet, without economy resistor, the time constant increasing with the power.

Operating cycles	V	24	48	125	250	440
1 million	W	96	76	76	76	44
3 million	W	48	38	38	32	–
10 million	W	14	12	12	–	–

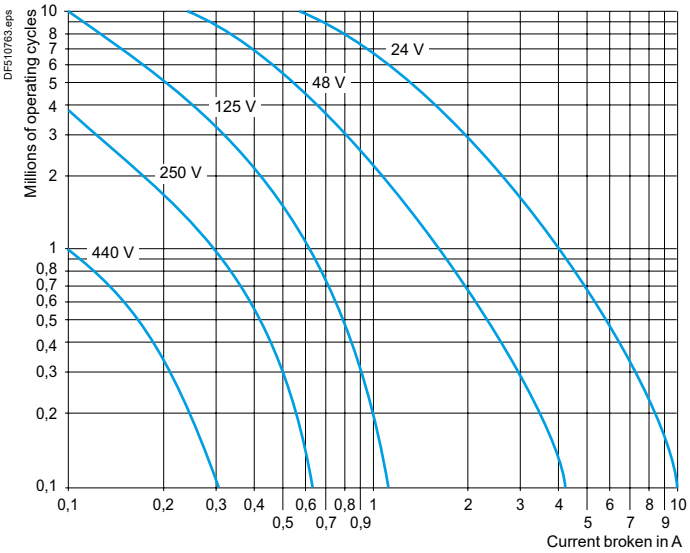

Dimensions and mounting

Dimensions

CAD ∼

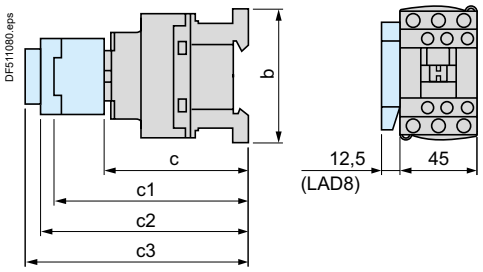

CAD		32 50	323 503
b		77	99
c	without cover or add-on blocks	84	84
	with cover, without add-on blocks	86	86
c1	with LADN or C (2 or 4 contacts)	117	117
c2	with LAD6K10	129	129
c3	with LADT, R, S	137	137
	with LADT, R, S and sealing cover	141	141

CAD ⎓ or LC (low consumption)

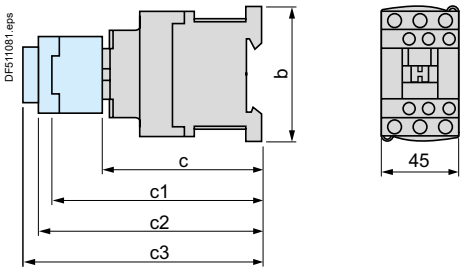

CAD		32 50	323 503
b		77	99
c	without cover or add-on blocks	93	93
	with cover, without add-on blocks	95	95
c1	with LADN or C (2 or 4 contacts)	126	126
c2	with LAD6K10	138	138
c3	with LADT, R, S	146	146
	with LADT, R, S and sealing cover	150	150

Operating cycles	V	24	48	125	250	440
1 million	W	120	90	75	68	61
3 million	W	70	50	38	33	28
10 million	W	25	18	14	12	10

Mounting

CAD

Panel mounted

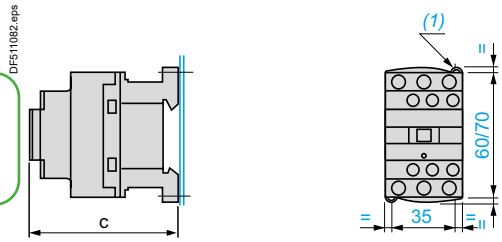

		CAD ∼	CAD ⎓ or LC
c	with cover	86	95

(1) 2 elongated holes 4.5 x 9.

Mounted on rail NSYDR200BD or NSYDR200

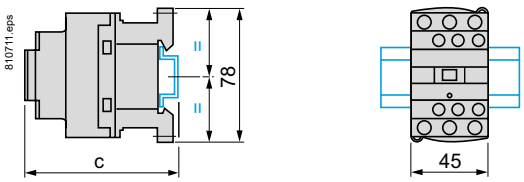

		CAD ∼	CAD ⎓ or LC
c	(NSYDR200BD) (2)	88	97
c	(NSYDR200BD) (2)	96	105

(2) With cover.

Mounted on plate AM1P

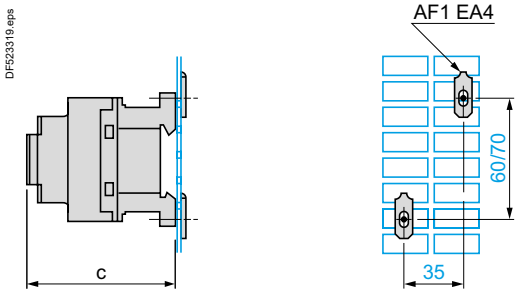

		CAD ∼	CAD ⎓ or LC
c	with cover	86	95

References:
pages B7/9 to B7/11
Illustration:
page B7/8
Characteristics:
pages B7/22 to B7/24
Curves:
page B7/25
Schemes:
page B7/27

Schemes

Instantaneous auxiliary contacts

5 N/O	3 N/O + 2 N/C
CAD50	**CAD32**

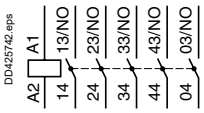

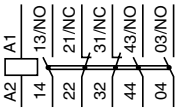

Instantaneous auxiliary contact blocks

1 N/O + 1 N/C		2 N/O		2 N/C	
LADN11	**LAD8N11** [1]	**LADN20**	**LAD8N20** [1]	**LAD8N02**	**LADN02**

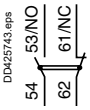

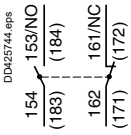

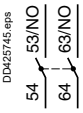

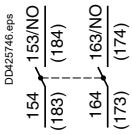

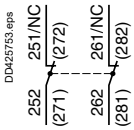

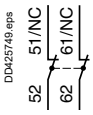

(1) The figures in brackets are for the device mounted on the RH side of the control relay.

2 N/O + 2F N/C	1 N/O + 3 N/C	4 N/O	4 N/C	3 N/O + 1 N/C
LADN22	**LADN13**	**LADN40**	**LADN04**	**LADN31**

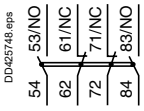

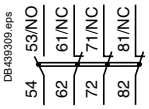

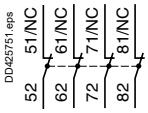

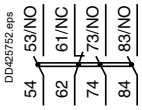

2 N/O + 2 N/C including 1 N/O + 1 N/C make before break	With dust and damp protected contacts 2 N/O protected	2 N/C protected	2 N/O protected [2] with 2 cable screen terminals	2 N/O protected + 2 N/O non protected	2 N/O protected + 1 N/O + 1 N/C non protected
LADC22	**LA1DX20**	**LA1DX02**	**LA1DY20**	**LA1DZ40**	**LA1DZ31**

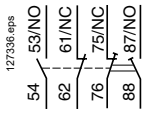

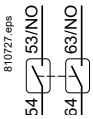

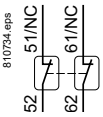

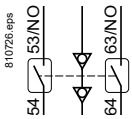

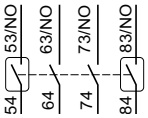

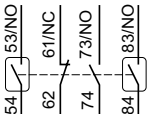

(2) Product fitted with 4 earth screen continuity terminals.

Time delay auxiliary contact blocks

On-delay 1 N/O + 1 N/C		Off-delay 1 N/O + 1 N/C
LADT	**LADS**	**LADR**

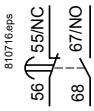

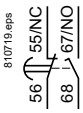

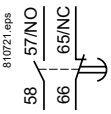

Mechanical latch blocks

LAD6K10

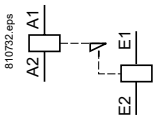

Ref.
Control relays

Life Is On Schneider Electric

TeSys Control
SK, K, SKGC, Deca, Modular Contactors

TeSys SK, K contactors

Type of product	Range	Pages
Contactors 27 and 45 mm width for use in modular panels TeSys SK	From 12 to 20 A	B8/2
Contactors TeSys K	From 6 to 16 A	B8/4
Reversing pre-assembled contactors TeSys K	From 6 to 16 A	B8/8
Auxiliary contact blocks - accessories		B8/13

TeSys K, Deca, Giga S207 series
Contactors for railway applications.
Click on image to download.

TeSys S335 series contactors
for electrodomestic application.
Click on image to download.

TeSys Deca contactors

AC-3/AC-3e, AC-1, UL CSA applications- TeSys Deca Advanced contactors (with AC/DC compatible coil)	From 9 to 80 A	B8/17
AC-3/AC-3e applications - 3-pole, 4-pole TeSys Deca contactors	From 9 to 150 A	B8/22
AC-1 applications - 3-pole, 4-pole TeSys Deca contactors	From 25 to 200 A	B8/23
UL CSA application - 3-pole TeSys Deca contactors	From 25 to 200 A	B8/28
Reversing, changeover pre-assembled TeSys Deca contactors	From 9 to 150 A	B8/29
Reversing contactors TeSys Deca Advanced contactors (with AC/DC compatible coil)	From 9 to 80 A	B8/34
Contactors for switching capacitor banks	From 12.5 to 60 kVAR	B8/34
Auxiliary contact blocks – accessories – spare coils for TeSys Deca		B8/36

Modular contactors

Modular contactors	From 16 to 100 A	B8/54
Modular Dual tariff contactors	16, 25, 40 or 100 A	B8/55
Modular Impulse relay	Up to 16 A	B8/56
Auxiliary contact blocks - accessories		B8/57

Technical Data for Designers B8/65

Product references

- Width of contactor 27 mm.
- Mounting on 35 mm ⎍ rail.
- Screw clamp terminals.

LC1SK contactors can be fitted with an add-on block or auxiliary contact block, LP1SK and LC1SKGC contactors can't.

PB111641.eps

LC1SK0600●●

Mini-contactors for motor in category AC-3

Standard power ratings of 3-phase motors 50/60 Hz in category AC-3 [1]			Rated operational voltage in AC-3 up to 400 V	Number of poles	Instantaneous auxiliary contacts		Basic reference. Complete with code indicating control circuit voltage [2] [3]
220 V 230 V	380 V 415 V	660 V 690 V					
kW	kW	kW	A				
1.1	2.2	2.2	6	2	–	–	**LC1SK0600●●**

Mini-contactors for motor in category AC-1

Non inductive loads maximum current (θ ≤ 55 °C) utilisation category AC-1	Control circuit supply	Number of poles	Instantaneous auxiliary contacts		Basic reference. Complete with code indicating control circuit voltage [2] [3]
A					
12	a.c.	2	–	–	**LC1SK0600●●**
	d.c.	2	–	–	**LP1SK0600●●**

*(1) For use in AC-3 category and 3-phase circuits, an **LA1SK●●** auxiliary contact block should be ordered separately for mounting on the contactor.*
(2) Standard control circuit voltages (variable delivery times, please consult your Regional Sales Office):

Mini-contactors LC1SK									
Volts ∼ 50/60 Hz	24	48	110	120	220	230	240	380	400
Code	B7	E7	F7	G7	M7	P7	U7	Q7	V7

Mini-contactors LP1SK					
Volts ⎓	12	24	36	48	72
Code	JD	BD	CD	ED	SD

(3) Please check the availability of your variant in the index page B8/58. The SEARCH function of your viewer can be used.

PB111639.eps

LA1SK01

Add-on power pole (for 3-phase circuits) with aux. contact

For use on contactor LC1SK0600●● with 1 NO power pole (6 A AC-3, 10 A AC-1) and with 1 NC aux. contact (Ith 10 A). Ue 690 V AC 50/60 Hz for both contacts	Number of poles	Instantaneous auxiliary contacts		Reference
Clip-on front mounting	1	–	1	**LA1SK01**

Instantaneous auxiliary contact blocks

For use on contactor LC1SK0600●● Aux. contacts: Ith 10 A. Ue: 690 V AC 50/60 Hz	Maximum number of blocks per contactor	Composition		Reference
Clip-on front mounting	1	2	–	**LA1SK20**
		–	2	**LA1SK02**
		1	1	**LA1SK11**

PB111640.eps

LA4SK●1●

Coil suppressor modules

Clip-on fixing and electrical connection on right-hand side, without use of tools

For use on contactors	Type	For voltages	Sold in lots of	Unit reference
LC1SK0600●● LP1SK0600●●, LC1SKGC●●●	Varistor [1]	∼ and ⎓ 24 V…48 V	10	**LA4SKE1E**
		∼ and ⎓ 110 V…250 V	10	**LA4SKE1U**
	Diode [2]	⎓ 24 V…250 V	10	**LA4SKC1U**

(1) Protection provided by limiting the transient voltage to 2 Uc max. Maximum reduction of transient voltage peaks. Slight increase in drop-out time (1.1 to 1.5 times the normal time).
(2) No overvoltage or oscillating frequency.
Slight increase in drop-out time (1.1 to 1.5 times the normal time).

Characteristics: pages B8/66 to B8/69
Dimensions, schemes: page B8/70
Click **HERE** for access to online contactor selector

Product references

Mini-contactors 25 and 47 mm pitch for use in modular panels.
- Mounting on 35 mm ⎓ rail or fixing by four Ø4 screws, except for LC1SKGC200.
- Connection by connectors.
- Mini-contactor fitted with transparent, sealable protective cover to prevent front face access.

PB111643.eps

LC1SKGC200

Mini-contactors, width 27 mm

Standard power ratings of 3-phase motors 50/60 Hz in category AC-3			Rated operational current in AC-3 up to 400 V	Non inductive loads category AC-1 maximum current θ ≤ 50 °C	No. of poles	Instantaneous auxiliary contacts		Basic reference, to be completed by adding the voltage code (1) (2)
220 V 230 V	380 V 415 V	660 V 690 V						
kW	kW	kW	A	A				
–	–	–	5	20	2	–	–	**LC1SKGC200●●**

PB111644.eps

LC1SKGC300

Mini-contactors, width 45 mm

Standard power ratings of 3-phase motors 50/60 Hz in category AC-3			Rated operational current in AC-3 up to 400 V	Non inductive loads category AC-1 maximum current θ ≤ 50 °C	No. of poles	Instantaneous auxiliary contacts		Basic reference, to be completed by adding the voltage code (1) (2)
220 V 230 V	380 V 415 V	660 V 690 V						
kW	kW	kW	A	A				
1.1	4	4	9	20	3	1	–	**LC1SKGC310●●**
					3	–	1	**LC1SKGC301●●**

(1) Standard control circuit voltages (for other voltages, please consult your Regional Sales Office):

Volts ∼ 50/60 Hz	24	48	110	120	220	230	240	380	400
Code	B7	E7	F7	G7	M7	P7	U7	Q7	V7

(2) Please check the availability of your variant in the index page B8/58. The SEARCH function of your viewer can be used.

Contactors

Characteristics: pages B8/71 to B8/73
Curves: page B8/74
Dimensions, schemes: page B8/75
Click **HERE** for access to online contactor selector

PB123779.tif

LC1K0910●●

PB123781.eps

LC1K09103●●

PB123783.eps

LC1K09107●●

PB123782.eps

LC1K09105●●

PB123786.eps

LC7K0910●●

Mounting on 35 mm ⊔ rail or Ø4 screw fixing.
Screws in the open "ready-to-tighten" position.
Add-on auxiliary contact blocks and accessories, see pages B8/13 to B8/15.

3-pole contactors - Motor control 6 to 16 A in categories AC-3, AC-3e, AC-4 - a.c. coil

Standard power ratings of 3-phase motors 50-60 Hz in category AC-3/AC-3e			Rated operational current in category AC-3/AC-3e 440 V up to	Instantaneous auxiliary contacts		Basic reference, to be completed by adding the voltage code (1) (2)
220 V 230 V	380 V 415 V	440 V 690 V				
kW	kW	kW	A			
Screw clamp connections						
1.5	2.2	3	**6**	1	-	**LC1K0610●●**
				-	1	**LC1K0601●●**
2.2	4	4	**9**	1	-	**LC1K0910●●**
				-	1	**LC1K0901●●**
3	5.5	4 (> 440)	**12**	1	-	**LC1K1210●●**
		5.5 (440)		-	1	**LC1K1201●●**
4	7.5	4 (> 440)	**16**	1	-	**LC1K1610●●**
		5.5 (440)		-	1	**LC1K1601●●**

Spring terminal connections (3)

For 6 to 12 A ratings only, in the references selected above, insert a figure **3** before the voltage code.
Example: **LC1K0610●●** becomes **LC1K06103●●.**

Faston connectors, 1 x 6.35 or 2 x 2.8

For 6 to 16 A ratings, in the references selected above, insert a figure **7** before the voltage code.
Example: **LC1K0610●●** becomes **LC1K06107●●**.

Solder pins for printed circuit boards

For 6 to 16 A ratings, in the references selected above, insert a figure **5** before the voltage code.
Example: **LC1K0610●●** becomes **LC1K06105●●**.

3-pole silent contactors

Recommended for use in areas sensitive to noise, high interference mains supplies, etc.
Coil with rectifier incorporated, suppressor fitted as standard.

Screw clamp connections

1.5	2.2	3	**6**	1	-	**LC7K0610●●**
				-	1	**LC7K0601●●**
2.2	4	4	**9**	1	-	**LC7K0910●●**
				-	1	**LC7K0901●●**
3	5.5	4 (> 440)	**12**	1	-	**LC7K1210●●**
		5.5 (440)		-	1	**LC7K1201●●**

Faston connectors, 1 x 6.35 or 2 x 2.8

In the references selected above, insert a figure **7** before the voltage code.
Example: **LC7K0610●●** becomes **LC7K06107●●**.

Solder pins for printed circuit boards

In the references selected above, insert a figure **5** before the voltage code.
Example: **LC7K0610●●** becomes **LC7K06105●●**.

Standard control circuit voltages (for other voltages, please consult your Regional Sales office)

Coil voltage codes - a.c. (4)

Contactors LC1K (0.8…1.15 Uc) *(0.85…1.1 Uc)*

Volts	**12**	**20**	**24** (1)	**36**	**42**	**48**	**110**	**115**	**120**	**127**	**200/208**		***220/230***	***230***	***230/240***
50 Hz (5)			B5		D5	E5								*P5*	
50/60 Hz	J7	Z7	B7	C7	D7	E7	F7	FE7	G7	FC7	L7		*M7*	*P7*	*U7*
Volts	**256**	***277***	***380/400***		**400**	***400/415***		**440**	**480**	**500**	**575**	**600**	**660/690**		
50/60 Hz	W7	UE7	*Q7*	–	V7	*N7*		R7	T7	S7	SC7	X7	*Y7*	–	–

Up to and including 240 V, coil with integral suppression device available: add **2** to the code required. Example: **J72**.

Contactors LC7K (0.85…1.1 Uc)

Volts	**24**	**42**	**48**	**110**	**115**	**220**	**230/240**
50/60 Hz	B7	D7	E7	F7	FE7	M7	U7

*(1) For mains supplies with a high level of interference (voltage surge > 800 V), use a suppressor module **LA4KE1FC** (50…129 V) or **LA4KE1UG** (130…250 V), see page B8/14.*
(2) Please check the availability of your variant in the index page B8/58. The SEARCH function of your viewer can be used.
*(3) For **LC●K●●●●3 / LP●K●●●●3** with spring terminal, Ith max = 16 A.*
(4) (0.8…1.15 Uc) for single voltage coil; (0.85…1.1 Uc) for dual voltage coil, example 200/208 V AC.
(5) Only available for 'screw clamp terminals' versions.

Characteristics: pages B8/76 to B8/78
Dimensions: page B8/80
Schemes: page B8/81
Click **HERE** for access to online contactor selector

PB123787.eps

LP1K0910●●

PB123789.eps

LP1K09103●●

PB123790.eps

LP1K09105●●

PB123792.eps

LP4K0910●●

Contactor selection according to utilisation category, see pages A5/96 to A5/101 and A5/104 to A5/107.
Mounting on 35 mm ⎍ rail or Ø4 screw fixing.
Screws in the open "ready-to-tighten" position.
Add-on auxiliary contact blocks and accessories, see pages B8/13 to B8/15.

3-pole contactors - Motor control 6 to 12 A in categories AC-3, AC-3e, AC-4 - d.c. coil

Standard power ratings of 3-phase motors 50-60 Hz in category AC-3/AC-3e			Rated operational current in category AC-3/AC-3e 440 V up to	Instantaneous auxiliary contacts		Basic reference, to be completed by adding the voltage code (1) (2)
220 V 230 V	380 V 415 V	440 V 690 V				
kW	kW	kW	A			
Screw clamp connections						
1.5	2.2	3	**6**	1	–	**LP1K0610●●**
				–	1	**LP1K0601●●**
2.2	4	4	**9**	1	–	**LP1K0910●●**
				–	1	**LP1K0901●●**
3	5.5	4 (> 440)	**12**	1	–	**LP1K1210●●**
		5.5 (440)		–	1	**LP1K1201●●**

Spring terminal connections (3)

In the references selected above, insert a figure **3** before the voltage code.
Example: **LP1K0610●●** becomes **LP1K06103●●**.

Faston connectors, 1 x 6.35 or 2 x 2.8

In the references selected above, insert a figure **7** before the voltage code.
Example: **LP1K0610●●** becomes **LP1K06107●●**.

Solder pins for printed circuit boards

In the references selected above, insert a figure **5** before the voltage code.
Example: **LP1K0610●●** becomes **LP1K06105●●**.

3-pole low consumption contactors

Compatible with programmable controller outputs.
Wide range coil (0.7…1.30 Uc), suppressor fitted as standard, consumption 1.8 W.

Screw clamp connections						
1.5	2.2	3	**6**	1	–	**LP4K0610●●**
				–	1	**LP4K0601●●**
2.2	4	4	**9**	1	–	**LP4K0910●●**
				–	1	**LP4K0901●●**
3	5.5	4 (> 440)	**12**	1	–	**LP4K1210●●**
		5.5 (440)		–	1	**LP4K1201●●**

Spring terminal connections

In the references selected above, insert a figure **3** before the voltage code.
Example: **LP4K0610●●** becomes **LP4K06103●●**.

Faston connectors, 1 x 6.35 or 2 x 2.8

In the references selected above, insert a figure **7** before the voltage code.
Example: **LP4K0610●●** becomes **LP4K06107●●**.

Solder pins for printed circuit boards

In the references selected above, insert a figure **5** before the voltage code.
Example: **LP4K0610●●** becomes **LP4K06105●●**.

Standard control circuit voltages (for other voltages, please consult your Regional Sales office)

d.c. supply (contactors LP1K: 0.8...1.15 Uc)

Volts	**12**	**20**	**24** (1)	**36**	**48**	**60**	**72**	**100**	**110**	**125**	**155**	**174**	**200**	**220**	**230**	**240**	**250**
Code	JD	ZD	BD	CD	ED	ND	SD	KD	FD	GD	PD	QD	LD	MD	MPD	MUD	UD

Coil with integral suppression device available: add **3** to the code required. Example: **JD3**

Low consumption (contactors LP4K: 0.7...1.3 Uc)

Volts	**12**	**20**	**24**	**48**	**72**	**110**	**120**
Code	JW3	ZW3	BW3	EW3	SW3	FW3	GW3

Coil with integral suppression device fitted as standard, by bi-directional peak limiting diode.

*(1) For **LP1K** only, when connecting an electronic sensor or timer in series with the contactor coil, select a 20 V coil (∿ control circuit voltage code Z7, ⎓ control circuit voltage code ZD) so as to compensate for the incurred voltage drop.*
(2) Please check the availability of your variant in the index page B8/58. The SEARCH function of your viewer can be used.
*(3) For **LC●K●●●●3** / **LP●K●●●●3** with spring terminal), Ith max = 16 A.*

Characteristics: pages B8/76 to B8/78
Dimensions: page B8/80
Schemes: page B8/81
Click HERE for access to online contactor selector

PB123780.eps

LC1K09004●●

PB123781.eps

LC1K09103●●

PB123783.eps

LC1K09107●●

PB123786.eps

LC7K0910●●

Contactor selection according to utilisation category, see pages A5/102 and A5/103.
Mounting on 35 mm ⎓ rail or Ø4 screw fixing.
Screws in the open "ready-to-tighten" position.
Add-on auxiliary contact blocks and accessories, see pages B8/13 to B8/15.

3 or 4-pole contactors - Load control up to 20 A in category AC-1 - a.c. coil [1]

Non-inductive loads Category AC-1 Maximum current at θ ≤ 50 °C	Number of poles		Instantaneous auxiliary contacts		Basic reference, to be completed by adding the voltage code [2] [3]
A					
Screw clamp connections					
20	3	–	1	–	**LC1K0910●●**
					or **LC1K1210●●**
	3	–	–	1	**LC1K0901●●**
					or **LC1K1201●●**
	4	–	–	–	**LC1K09004●●**
					or **LC1K12004●●**
	2	2	–	–	**LC1K09008●●**

Spring terminal connections [4]

In the references selected above, insert a figure **3** before the voltage code.
Example: **LC1K0910●●** becomes **LC1K09103●●**.

Faston connectors, 1 x 6.35 or 2 x 2.8

In the references selected above, insert a figure **7** before the voltage code.
Example: **LC1K0910●●** becomes **LC1K09107●●**.

Solder pins for printed circuit boards

In the references selected above, insert a figure **5** before the voltage code.
Example: **LC1K0910●●** becomes **LC1K09105●●**.

3 or 4-pole silent contactors [1]

Recommended for use in areas sensitive to noise, high interference mains supplies, etc.
Coil with rectifier incorporated, suppressor fitted as standard.

Screw clamp connections					
20	3	–	1	–	**LC7K0910●●**
					or **LC7K1210●●**
	3	–	–	1	**LC7K0901●●**
					or **LC7K1201●●**
	4	–	–	–	**LC7K09004●●**
					or **LC7K12004●●**
	2	2	–	–	**LC7K09008●●**

Faston connectors, 1 x 6.35 or 2 x 2.8

In the references selected above, insert a figure **7** before the voltage code.
Example: **LC7K0910●●** becomes **LC7K09107●●**.

Solder pins for printed circuit boards

In the references selected above, insert a figure **5** before the voltage code.
Example: **LC7K0910●●** becomes **LC7K09105●●**.

(1) Coordination tables between 9 and 12 A ratings according to number of operating cycles, see AC-1 curve on page A5/102.

Standard control circuit voltages (for other voltages, please consult your Regional Sales office)

Coil voltage codes - a.c. [5]

Contactors LC1K (0.8…1.15 Uc) *(0.85…1.1 Uc)*

Volts	**12**	**20**	**24** [2]	**36**	**42**	**48**	**110**	**115**	**120**	**127**	**200/208**		***220/230***	**230**	***230/240***
50 Hz [6]			B5		D5	E5								P5	
50/60 Hz	J7	Z7	B7	C7	D7	E7	F7	FE7	G7	FC7	L7		*M7*	P7	*U7*
Volts	**256**	**277**	***380/400***		**400**	***400/415***		**440**	**480**	**500**	**575**	**600**	***660/690***		
50/60 Hz	W7	UE7	*Q7*		V7	*N7*		R7	T7	S7	SC7	X7	*Y7*		

Up to and including 240 V, coil with integral suppression device available: add **2** to the code required. Example: **J72.**

Contactors LC7K (0.8…1.1 Uc)

Volts	**24**	**42**	**48**	**110**	**115**	**220**	**230/240**
50/60 Hz	B7	D7	E7	F7	FE7	M7	U7

*(2) For mains supplies with a high level of interference (voltage surge > 800 V), use a suppressor module **LA4KE1FC** (50…129 V) or **LA4KE1UG** (130…250 V), see page B8/14.*
(3) Please check the availability of your variant in the index page B8/58. The SEARCH function of your viewer can be used.
*(4) For **LC●K●●●●3 / LP●K●●●●3** with spring terminal, Ith max = 16 A.*
(5) (0.8…1.15 Uc) for single voltage coil; (0.85…1.1 Uc) for dual voltage coil, example 200/208 V AC.
(6) Only available for 'screw clamp terminals' versions.

Characteristics: pages B8/76 to B8/78
Dimensions: page B8/80
Schemes: page B8/81
Click **HERE** for access to online contactor selector

PB123788.eps

LP1K09004●●

PB123789.eps

LP1K09103●●

PB123790.eps

LP1K09105●●

PB123792.eps

LP4K0910●●●

Contactor selection according to utilisation category, see pages A5/102 and A5/103.
Mounting on 35 mm ⎓ rail or Ø4 screw fixing.
Screws in the open "ready-to-tighten" position.
Add-on auxiliary contact blocks and accessories, see pages B8/13 to B8/15.

3 and 4-pole contactors - Load control - 20 A in category AC-1 - d.c. coil (1)

Non-inductive loads Category AC-1 Maximum current at θ ≤ 50 °C	Number of poles		Instantaneous auxiliary contacts		Basic reference, to be completed by adding the voltage code (2) (3)
A					
Screw clamp connections					
20	3	–	1	–	**LP1K0910●●**
					or **LP1K1210●●**
	3	–	–	1	**LP1K0901●●**
					or **LP1K1201●●**
	4	–	–	–	**LP1K09004●●**
					or **LP1K12004●●**
	2	2	–	–	**LP1K09008●●**

Spring terminal connections (4)

In the references selected above, insert a figure **3** before the voltage code.
Example: **LP1K0910●●** becomes **LP1K09103●●**.

Faston connectors, 1 x 6.35 or 2 x 2.8

In the references selected above, insert a figure **7** before the voltage code.
Example: **LP1K0910●●** becomes **LP1K09107●●**.

Solder pins for printed circuit boards

In the references selected above, insert a figure **5** before the voltage code.
Example: **LP1K0910●●** becomes **LP1K09105●●**.

3 or 4-pole 20 A / AC-1 - d.c. low consumption coil (1)

Compatible with programmable controller outputs.
Wide range coil (0.7…1.30 Uc), suppressor fitted as standard, consumption 1.8 W.

Screw clamp connections					
20	3	–	1	–	**LP4K0910●●●**
					or **LP4K1210●●●**
	3	–	–	1	**LP4K0901●●●**
					or **LP4K1201●●●**
	4	–	–	–	**LP4K09004●●●**
					or **LP4K12004●●●**
	2	2	–	–	**LP4K09008●●●**

Spring terminal connections

In the references selected above, insert a figure **3** before the voltage code.
Example: **LP4K0910●●** becomes **LP4K09103●●**.

Faston connectors, 1 x 6.35 or 2 x 2.8

In the references selected above, insert a figure **7** before the voltage code.
Example: **LP4K0910●●** becomes **LP4K09107●●**.

Solder pins for printed circuit boards

In the references selected above, insert a figure **5** before the voltage code.
Example: **LP4K0910●●** becomes **LP4K09105●●**.

(1) Coordination tables between 9 and 12 A ratings according to number of operating cycles, see AC-1 curve on page A5/102.

Standard control circuit voltages (for other voltages, please consult your Regional Sales office)

Coil voltage codes - d.c. (contactors LP1K: 0.8...1.15 Uc)

Volts ⎓	**12**	**20**	**24** (2)	**36**	**48**	**60**	**72**	**100**	**110**	**125**	**155**	**174**	**200**	**220**	**230**	**240**	**250**
Code	JD	ZD	BD	CD	ED	ND	SD	KD	FD	GD	PD	QD	LD	MD	MPD	MUD	UD

Coil with integral suppression device available: add **3** to the code required. Example: **JD3.**

Coil voltage codes - low consumption d.c. (contactors LP4K: 0.7...1.3 Uc)

Volts ⎓	**12**	**20**	**24**	**48**	**72**	**110**	**120**
Code	JW3	ZW3	BW3	EW3	SW3	FW3	GW3

Coil with integral suppression device fitted as standard, by bi-directional peak limiting diode.

*(2) For **LP1K** only, when connecting an electronic sensor or timer in series with the contactor coil, select a 20 V coil (∿ control circuit voltage code Z7, ⎓ control circuit voltage code ZD) so as to compensate for the incurred voltage drop.*

(3) Please check the availability of your variant in the index page B8/58. The SEARCH function of your viewer can be used.

*(4) For **LC●K●●●●3 / LP●K●●●●3** with spring terminal, Ith max = 16 A.*

Contactors

Characteristics: pages B8/76 to B8/78
Dimensions: page B8/80
Schemes: page B8/81
Click HERE for access to online contactor selector

PB123784.tif

LC2K0910●●

PB123785.eps

LC2K09105●●

Reversing contactor selection according to utilisation category, see pages A5/96 to A5/101 and A5/104 to A5/107.
Integral mechanical interlock.
It is essential to link the contacts of the electrical interlock.
Pre-wired power circuit connections as standard on screw clamp versions.
Mounting on 35 mm ⎓ rail or Ø4 screw fixing. Screws in the open "ready-to-tighten" position.
Add-on auxiliary contact blocks and accessories, see pages B8/13 to B8/15.

3-pole reversing contactors - Motor control 6 to 16 A in categories AC-3, AC-3e, AC-4 - a.c. coil

Standard power ratings of 3-phase motors 50/60 Hz in category AC-3/AC-3e			Rated operational current in category AC-3/AC-3e 440 V up to	Instantaneous auxiliary contacts per contactor		Basic reference, to be completed by adding the voltage code (1) (2)
220 V 230 V	380 V 415 V	440 V 690 V				
kW	kW	kW	A			
Screw clamp connections						
1.5	2.2	3	**6**	1	–	**LC2K0610●●**
				–	1	**LC2K0601●●**
2.2	4	4	**9**	1	–	**LC2K0910●●**
				–	1	**LC2K0901●●**
3	5.5	4 (> 440)	**12**	1	–	**LC2K1210●●**
		5.5 (440)		–	1	**LC2K1201●●**
4	7.5	4 (> 440)	**16**	1	–	**LC2K1610●●**
		5.5 (440)		–	1	**LC2K1601●●**

Spring terminal connections (3)

For 6 to 12 A ratings only, in the references selected above, insert a figure **3** before the voltage code.
Example: **LC2K0610●●** becomes **LC2K06103●●**.

Faston connectors, 1 x 6.35 or 2 x 2.8

For 6 to 16 A ratings, in the references selected above, insert a figure **7** before the voltage code.
Example: **LC2K0610●●** becomes **LC2K06107●●**.

Solder pins for printed circuit boards

For 6 to 16 A ratings, in the references selected above, insert a figure **5** before the voltage code.
Example: **LC2K0610●●** becomes **LC2K06105●●**.

Standard control circuit voltages (for other voltages, please consult your Regional Sales office)

Coil voltage codes - a.c. (4)

Reversing contactors LC2K (0.8…1.15 Uc) *(0.85…1.1 Uc)*

Volts	**12**	**20**	**24** (1)	**36**	**42**	**48**	**110**	**115**	**120**	**127**	**200/208**		***220/230***	**230**	***230/240***
50/60 Hz	J7	Z7	B7	C7	D7	E7	F7	FE7	G7	FC7	L7		*M7*	P7	U7
Volts	**256**	**277**	***380/400***		**400**	***400/415***		**440**	**480**	**500**	**575**	**600**	***660/690***		
50/60 Hz	W7	UE7	*Q7*		V7	*N7*		R7	T7	S7	SC7	X7	*Y7*		

Up to and including 240 V, coil with integral suppression device available: add **2** to the code required. Example: **J72.**

*(1) For mains supplies with a high level of interference (voltage surge > 800 V), use a suppressor module **LA4KE1FC** (50…129 V) or **LA4KE1UG** (130…250 V), see page B8/14.*
(2) Please check the availability of your variant in the index page B8/58. The SEARCH function of your viewer can be used.
*(3) For **LC●K●●●●3 / LP●K●●●●3** with spring terminal, Ith max = 16 A.*
(4) (0.8…1.15 Uc) for single voltage coil; (0.85…1.1 Uc) for dual voltage coil, example 200/208 V AC.

Characteristics: pages B8/76 to B8/78
Dimensions: page B8/82
Schemes: page B8/83
Click **HERE** for access to online contactor selector

Reversing contactor selection according to utilisation category, see pages A5/96 to A5/101 and A5/104 to A5/107.
Integral mechanical interlock.
It is essential to link the contacts of the electrical interlock.
Pre-wired power circuit connections as standard on screw clamp versions.
Mounting on 35 mm ⎽⎽ rail or Ø4 screw fixing.
Screws in the open "ready-to-tighten" position.
Add-on auxiliary contact blocks and accessories, see pages B8/13 to B8/15.

3-pole reversing contactors - Motor control 6 to 12 A in categories AC-3, AC-3e, AC-4 - d.c. coil

Standard power ratings of 3-phase motors 50-60 Hz in category AC-3/AC-3e			Rated operational current in category AC-3/AC-3e 440 V up to	Instantaneous auxiliary contacts per contactor		Basic reference, to be completed by adding the voltage code (1) (2)
220 V 230 V	380 V 415 V	440 V 690 V				
kW	kW	kW	A			
Screw clamp connections						
1.5	2.2	3	6	1	–	**LP2K0610●●**
				–	1	**LP2K0601●●**
2.2	4	4	9	1	–	**LP2K0910●●**
				–	1	**LP2K0901●●**
3	5.5	4 (> 440)	12	1	–	**LP2K1210●●**
		5.5 (440)		–	1	**LP2K1201●●**

Spring terminal connections (3)

In the references selected above, insert a figure **3** before the voltage code.
Example: **LP2K0610●●** becomes **LP2K06103●●**.

Faston connectors, 1 x 6.35 or 2 x 2.8

In the references selected above, insert a figure **7** before the voltage code.
Example: **LC2K0610●●** becomes **LC2K06107●●**.

Solder pins for printed circuit boards

For 6 to 16 A ratings, in the references selected above, insert a figure **5** before the voltage code.
Example: **LC2K0610●●** becomes **LC2K06105●●**.

3-pole low consumption reversing contactors

Compatible with programmable controller outputs.
Wide range coil (0.7…1.30 Uc), suppressor fitted as standard, consumption 1.8 W.

Screw clamp connections						
1.5	2.2	3	6	1	–	**LP5K0610●●**
				–	1	**LP5K0601●●**
2.2	4	4	9	1	–	**LP5K0910●●**
				–	1	**LP5K0901●●**
3	5.5	4 (> 440)	12	1	–	**LP5K1210●●**
		5.5 (440)		–	1	**LP5K1201●●**

Spring terminal connections

In the references selected above, insert a figure **3** before the voltage code.
Example: **LP5K0610●●** becomes **LP5K06103●●**.

Faston connectors, 1 x 6.35 or 2 x 2.8

In the references selected above, insert a figure **7** before the voltage code.
Example: **LP5K0610●●** becomes **LP5K06107●●**.

Solder pins for printed circuit boards

In the references selected above, insert a figure **5** before the voltage code.
Example: **LP5K0610●●** becomes **LP5K06105●●**.

Standard control circuit voltages (for other voltages, please consult your Regional Sales office)

Coil voltage codes - d.c.

Reversing contactors LP2K (0.8…1.15 Uc)

Volts	12	20	24 (1)	36	48	60	72	100	110	125	155	174	200	220	230	240	250
Code	JD	ZD	BD	CD	ED	ND	SD	KD	FD	GD	PD	QD	LD	MD	MPD	MUD	UD

Coil with integral suppression device available: add **3** to the code required. Example: **JD3**.

Coil voltage codes - low consumption d.c.

Reversing contactors LP5K (0.7…1.3 Uc)

Volts	12	20	24	48	72	110	120
Code	JW3	ZW3	BW3	EW3	SW3	FW3	GW3

Coil with integral suppression device fitted as standard, by bi-directional peak limiting diode.

*(1) For **LP2K** only, when connecting an electronic sensor or timer in series with the contactor coil, select a 20 V coil (∿ control circuit voltage code Z7, ⎓ control circuit voltage code ZD) so as to compensate for the incurred voltage drop.*
(2) Please check the availability of your variant in the index page B8/58. The SEARCH function of your viewer can be used.
*(3) For **LC●K●●●●3 / LP●K●●●●3** with spring terminal, Ith max = 16 A.*

Characteristics: pages B8/76 to B8/79
Dimensions: page B8/82
Schemes: page B8/83
Click **HERE** for access to online contactor selector

PB123784.tif

LC2K0910●●

Warning: reversing contactors LC2K0910●● and LC2K0901●● are pre-wired for reverse motor operation as standard.
Reversing contactor selection according to utilisation category, see pages A5/102 and A5/103.
Integral mechanical interlock.
It is essential to link the contacts of the electrical interlock.
Mounting on 35 mm ⎓ rail or Ø4 screw fixing.
Screws in the open "ready-to-tighten" position.
Add-on auxiliary contact blocks and accessories, see pages B8/13 to B8/15.

3 or 4-pole reversing contactors - Load control - 20 A in category AC-1 - a.c. coil [1]

Non-inductive loads Category AC-1 Maximum current at θ ≤ 50 °C	Number of poles		Instantaneous auxiliary contacts per contactor			Basic reference, to be completed by adding the voltage code [2] [3]
A						
Screw clamp connections						
20	3	–	1	–		**LC2K0910●●**
					or	**LC2K1210●●**
	3	–	–	1		**LC2K0901●●**
					or	**LC2K1201●●**
	4	–	–	–		**LC2K09004●●**
					or	**LC2K12004●●**

PB123785.eps

LC2K09105●●

Spring terminal connections [4]

In the references selected above, insert a figure **3** before the voltage code.
Example: **LC2K0910●●** becomes **LC2K09103●●**.

Faston connectors, 1 x 6.35 or 2 x 2.8

In the references selected above, insert a figure **7** before the voltage code.
Example: **LC2K0910●●** becomes **LC2K09107●●**.

Solder pins for printed circuit boards

In the references selected above, insert a figure **5** before the voltage code.
Example: **LC2K0910●●** becomes **LC2K09105●●**.

(1) Coordination tables between 9 and 12 A ratings according to number of operating cycles, see AC-1 curve on page A5/102.

Standard control circuit voltages (for other voltages, please consult your Regional Sales office)

Coil voltage codes - a.c. [5]

Reversing contactors LC2K (0.8…1.15 Uc) *(0.85…1.1 Uc)*

Volts	**12**	**20**	**24** [2]	**36**	**42**	**48**	**110**	**115**	**120**	**127**	**200/208**		***220/230***	***230***	***230/240***
50/60 Hz	J7	Z7	B7	C7	D7	E7	F7	FE7	G7	FC7	L7		*M7*	*P7*	*U7*
Volts	**256**	**277**	***380/400***		**400**	***400/415***		**440**	**480**	**500**	**575**	**600**	***660/690***		
50/60 Hz	W7	UE7	*Q7*		V7	*N7*		R7	T7	S7	SC7	X7	*Y7*		

Up to and including 240 V, coil with integral suppression device available: add **2** to the code required. Example: **J72**.

*(2) For mains supplies with a high level of interference (voltage surge > 800 V), use a suppressor module **LA4KE1FC** (50…129 V) or **LA4KE1UG** (130…250 V), see page B8/14.*
(3) Please check the availability of your variant in the index page B8/58. The SEARCH function of your viewer can be used.
*(4) For **LC●K●●●●3 / LP●K●●●●3** with spring terminal, Ith max = 16 A.*
(5) (0.8…1.15 Uc) for single voltage coil; (0.85…1.1 Uc) for dual voltage coil, example 200/208 V AC.

Warning: reversing contactors LP2K0910●● and LP2K0901●● are pre-wired for reverse motor operation as standard.
Reversing contactor selection according to utilisation category, see pages A5/102 and A5/103.
Integral mechanical interlock.
It is essential to link the contacts of the electrical interlock.
Mounting on 35 mm ⎓ rail or Ø4 screw fixing.
Screws in the open "ready-to-tighten" position.
Add-on auxiliary contact blocks and accessories, see pages B8/13 to B8/15.

3 or 4-pole reversing contactors - Load control - 20 A in category AC-1 - d.c. coil (1)

Non-inductive loads Category AC-1 Maximum current at θ ≤ 50 °C	Number of poles	Instantaneous auxiliary contacts per contactor		Basic reference, to be completed by adding the voltage code (2) (3)
A				
Screw clamp connections				
20	3	–	1 –	**LP2K0910●●**
			or	**LP2K1210●●**
	3	–	– 1	**LP2K0901●●**
			or	**LP2K1201●●**
	4	–	– –	**LP2K09004●●**
			or	**LP2K12004●●**

Spring terminal connections (4)
In the references selected above, insert a figure **3** before the voltage code.
Example: **LP2K0910●●** becomes **LP2K09103●●**.

Faston connectors, 1 x 6.35 or 2 x 2.8
In the references selected above, insert a figure **7** before the voltage code.
Example: **LP2K0910●●** becomes **LP2K09107●●**.

Solder pins for printed circuit boards
In the references selected above, insert a figure **5** before the voltage code.
Example: **LP2K0910●●** becomes **LP2K09105●●**.

3 or 4-pole reversing contactors - 20 A / AC-1 - d.c. low consumption coil (1)

Compatible with programmable controller outputs.
Wide range coil (0.7…1.30 Uc), suppressor fitted as standard, consumption 1.8 W.

Screw clamp connections				
20	3	–	1 –	**LP5K0910●●●**
			or	**LP5K1210●●●**
	3	–	– 1	**LP5K0901●●●**
			or	**LP5K1201●●●**
	4	–	– –	**LP5K09004●●●**
			or	**LP5K12004●●●**

Spring terminal connections
In the references selected above, insert a figure **3** before the voltage code.
Example: **LP5K0910●●** becomes **LP5K09103●●**.

Faston connectors, 1 x 6.35 or 2 x 2.8
In the references selected above, insert a figure **7** before the voltage code.
Example: **LP5K0910●●** becomes **LP5K09107●●**.

Solder pins for printed circuit boards
In the references selected above, insert a figure **5** before the voltage code.
Example: **LP5K0910●●** becomes **LP5K09105●●**.

(1) Coordination tables between 9 and 12 A ratings according to number of operating cycles, see AC-1 curve on page A5/102.

Standard control circuit voltages (for other voltages, please consult your Regional Sales office)

Coil voltage codes - d.c. (reversing contactors LP2K: 0.8…1.15 Uc)

Volts ⎓	12	20	24 (2)	36	48	60	72	100	110	125	155	174	200	220	230	240	250
Code	JD	ZD	BD	CD	ED	ND	SD	KD	FD	GD	PD	QD	LD	MD	MPD	MUD	UD

Coil with integral suppression device available: add **3** to the code required. Example: **JD3**.

Coil voltage codes - low consumption d.c. (reversing contactors LP5K: 0.7…1.3 Uc)

Volts ⎓	12	20	24	48	72	110	120
Code	JW3	ZW3	BW3	EW3	SW3	FW3	GW3

Coil with integral suppression device fitted as standard, by bi-directional peak limiting diode.

*(2) For **LP2K** only, when connecting an electronic sensor or timer in series with the contactor coil, select a 20 V coil (∿ control circuit voltage code Z7, ⎓ control circuit voltage code ZD) so as to compensate for the incurred voltage drop.*
(3) Please check the availability of your variant in the index page B8/58. The SEARCH function of your viewer can be used.
*(4) For **LC●K●●●●3 / LP●K●●●●3** with spring terminal, Ith max = 16 A.*

Characteristics: pages B8/76 to B8/79
Dimensions: page B8/82
Schemes: page B8/83
Click **HERE** for access to online contactor selector

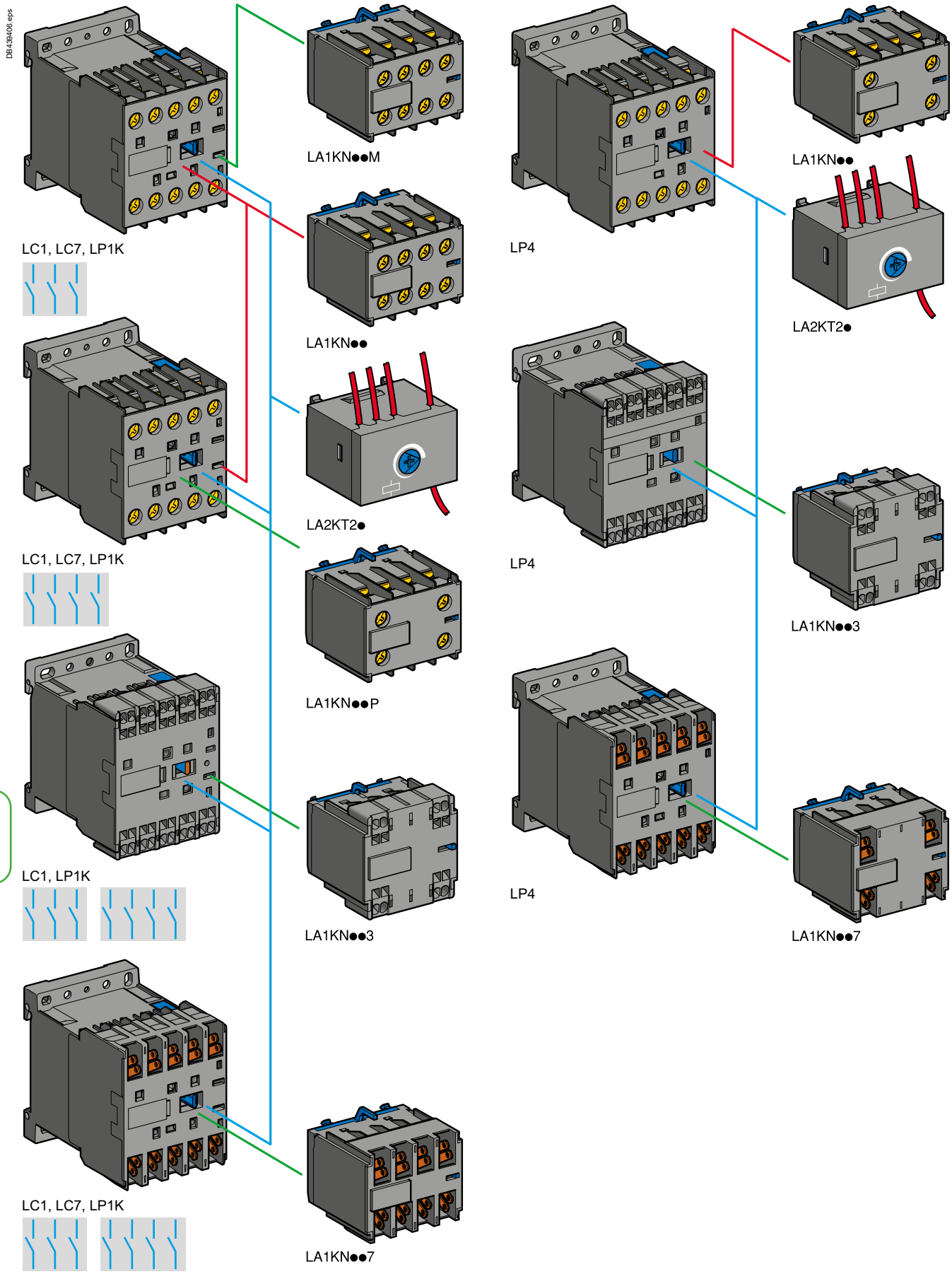

Life Is On Schneider Electric

Product references

PB121750_R.tif

LA1KN22

PB123817.eps

LA1KN223

PB123818.eps

LA1KN407

Instantaneous auxiliary contact blocks

Recommended for standard applications. Clip-on front mounting, 1 block per contactor

Connection	For use on contactors	Composition		Reference
Screw clamp terminals	All products with screw clamp terminals	2	–	**LA1KN20**
		–	2	**LA1KN02**
		1	1	**LA1KN11**
	All products with screw clamp terminals except low consumption	4	–	**LA1KN40**
		3	1	**LA1KN31**
		2	2	**LA1KN22**
		1	3	**LA1KN13**
		–	4	**LA1KN04**
Spring terminals	All products with spring terminals	2	–	**LA1KN203**
		–	2	**LA1KN023**
		1	1	**LA1KN113**
	All products with spring terminals except low consumption	4	–	**LA1KN403**
		3	1	**LA1KN313**
		2	2	**LA1KN223**
		1	3	**LA1KN133**
		–	4	**LA1KN043**
Faston connectors, 1 x 6.35 or 2 x 2.8	All products with Faston connectors	2	–	**LA1KN207**
	All products with Faston connectors except low consumption	4	–	**LA1KN407**
		3	1	**LA1KN317**

With terminal referencing to standard EN 50012. Clip-on front mounting, 1 block per contactor

Screw clamp terminals with referencing conforming to standard EN 50012	All 3-pole + N/O products with screw clamp terminals except LP4 and LP5K12	–	2	**LA1KN02M**
		1	1	**LA1KN11M**
	All 3-pole + N/O products with screw clamp terminals except LP4 or LP5K06, K09 and K12	3	1	**LA1KN31M**
		2	2	**LA1KN22M**

Electronic time delay auxiliary contact blocks

Relay output with common point changeover contact, ∿ or ⎓ 240 V, 2 A maximum.
Control voltage 0.85…1.1 Uc.
Maximum switching capacity 250 VA or 150 W.
Operating temperature -10…+60 °C.
Reset time: 1.5 s during the time delay period, 0.5 s after the time delay period.

Clip-on front mounting, 1 block per contactor

Voltage	Type	Timing range	Composition	Reference
V		s		
∿ or ⎓ 24…48	On-delay	1…30	1	**LA2KT2E**
∿ 110…240	On-delay	1…30	1	**LA2KT2U**

Contactors

Characteristics: page B8/79
Dimensions: pages B8/80 and B8/82
Schemes: pages B8/81 and B8/83

Product references

LA4K●●●

References

Mounting and connection	Type	For voltages	Sold in lots of	Unit reference
Clip-on fixing on the front of contactors LC1 and LP1, with locating device. No tools required.	Varistor (1)	∿ and ⎓ 12…24 V	5	**LA4KE1B**
		∿ and ⎓ 32…48 V	5	**LA4KE1E**
		∿ and ⎓ 50…129 V	5	**LA4KE1FC**
		∿ and ⎓ 130…250 V	5	**LA4KE1UG**
	Diode + Zener diode (2)	⎓ 12…24 V	5	**LA4KC1B**
		⎓ 32…48 V	5	**LA4KC1E**
	RC (3)	∿ 110…250 V	5	**LA4KA1U**

(1) Protection provided by limiting the transient voltage to 2 Uc max.
Maximum reduction of transient voltage peaks.
Slight increase in drop-out time (1.1 to 1.5 times the normal time).
(2) No overvoltage or oscillating frequency.
Polarised component.
Slight increase in drop-out time (1.1 to 1.5 times the normal time).
(3) Protection by limiting the transient voltage to 3 Uc max. and limitation of the oscillating frequency.
Slight increase in drop-out time (1.2 to 2 times the normal time).

Characteristics:
page B8/79

Dimensions:
pages B8/80 and B8/82

Schemes:
pages B8/81 and B8/83

Life Is On Schneider Electric

Product references

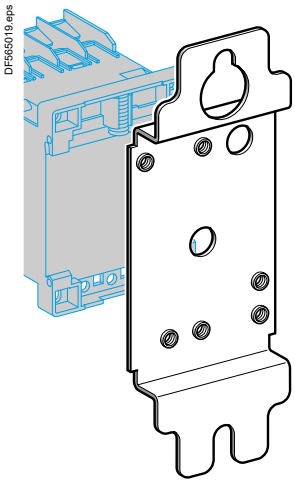

DX1AP25

LA9E01

Mounting and marking accessories

Description	Application		Sold in lots of	Unit reference
Mounting plates [1]	For fixing on 2 ⊔ rails	110/120 mm fixing centres	10	**DX1AP25**
Marker holder	Clip-on	Onto front of contactor	100	**LA9D90**

Connection accessories

Description	Application		Sold in lots of	Unit preference
Paralleling links	For 2 poles	With screw clamps	4	**LA9E01**
	For 4 poles	With screw clamps	2	**LA9E02**
Set of 6 power connections	For 3-pole reversing contactors for motor control	For contactors with screw clamp terminals	100	**LA9K0969**

(1) Order 1 mounting plate for fixing a contactor and 2 mounting plates for fixing a reversing contactor.
(2) Complete the reference by replacing the dot with the required character.

Control Panel Technical Guide:
Mounting and wiring accessories for TeSys K, Deca, F contactors. Star-delta, reverser, low-high speed control motor starters and changeover applications - Product references and details on all kits and wiring accessories.

> Ref. Document: CPTG011_EN

> Click on QR code to download

Dimensions:
pages B8/80 and B8/82

Life Is On | Schneider Electric

Deca Advanced, enriching Deca family

Deca conventional contactors 9 to 150 A, for motor control and other applications.

Deca Advanced delivers a consistent low consumption range of contactors from 9 A to 80 A, covering control voltage from 24 to 250 V, with same coils for AC and DC.

9 - 12 - 18 A

25 - 32 - 38 A

40 - 50 - 65 A

80 A

80 - 95 A

115 - 150 A

9 - 12 - 18 A

25 - 32 - 38 A

40 - 50 - 65 - 80 A
Direct control by 24 V/500 mA DC I/O, with coil ref. BBE

When implemented with other Schneider Electric products*, Deca Advanced contactors are part of a comprehensive solution that is ideal for all types of industrial machines and processes.

Deca Overload relay

By combining a Deca Advanced contactor with our new Deca electronic overload relay, you will have less heat generation, and further reduce energy consumption.

* such as PLC I/O type M580, M340, M221 or M241 or extended I/O type Advantys STB range, or in association with Deca electronic overload relays or Tera Motor management system.

Highly competitive coil consumption

Small changes can generate big savings.
The new Deca Advanced contactor is equipped with an innovative electronic coil. These electronic-coil contactors require **up to 80 % less energy** than electro-mechanical contactors.This innovation results in concrete values: for example, large plants can noticeably reduce their energy bills and heat dissipation in cabinet.

Available in → 09-12-18 A 25-32-38 A 40-50-65-80 A

Coil currents comparison

Deca Advanced contactors (AC/DC coil) vs Deca contactors (AC, DC coils)

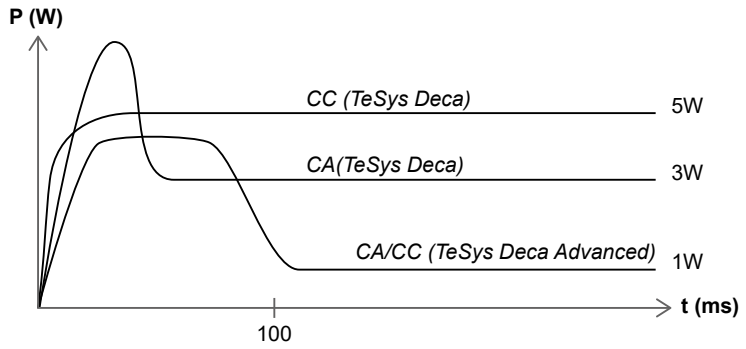

Deca Advanced brings a significant reduction of energy consumption.

Deca Advanced contactors ("BBE" coil) vs Deca contactors (low consumption "BL" coil)

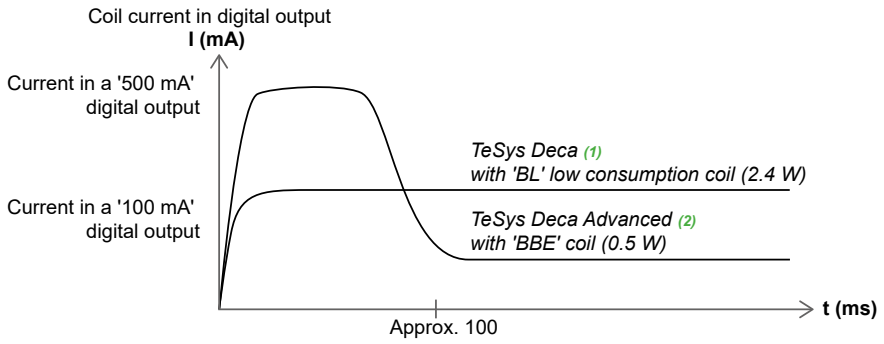

(1) Up to 38 A.
(2) 40 to 80 A.

Deca Advanced contactor is well adapted to direct control by PLC static outputs, even in its high ratings.

PB121708.tif

LC1D09●●●

PB121710.tif

LC1D40A●●●

Deca Advanced contactors have a dark grey casing and a 3-character code voltage.

3-pole contactors - Motor control up to 37 kW / 400 V - Category AC-3/AC-3e

Standard power ratings of 3-phase motors 50-60 Hz in category AC-3/AC-3e (θ ≤ 60 °C)						Rated operational current in AC-3/AC-3e 440 V up to	Instantaneous auxiliary contacts		Basic reference, to be completed by adding the control voltage code [1] / Fixing [2]	Weight
220 V 230 V	380 V 400 V	415 V	440 V	500 V	660 V 690 V					
kW	kW	kW	kW	kW	kW	A				kg
Connection by screw clamp terminals										
2.2	4	4	4	5.5	5.5	9	1	1	**LC1D09●●●**	0.368
3	5.5	5.5	5.5	7.5	7.5	12	1	1	**LC1D12●●●**	0.373
4	7.5	9	9	10	10	18	1	1	**LC1D18●●●**	0.378
5.5	11	11	11	15	15	25	1	1	**LC1D25●●●**	0.433
7.5	15	15	15	18.5	18.5	32	1	1	**LC1D32●●●**	0.438
9	18.5	18.5	18.5	18.5	18.5	38	1	1	**LC1D38●●●**	0.442
Power connections by EverLink® BTR [3] screw connectors and control by screw clamp terminal										
11	18.5	22	22	22	30	40	1	1	**LC1D40A●●●**	0.992
15	22	25	30	30	33	50	1	1	**LC1D50A●●●**	0.997
18.5	30	37	37	37	37	65	1	1	**LC1D65A●●●**	1.002
22	37	37	37	37	37	66	1	1	**LC1D80A●●●**	1.002
Connection for lugs or bars										

For LC1D40A to LC1D80A, insert a figure 6 before the voltage code.
Example: LC1D40A●●● becomes LC1D40A6●●●

Auxiliary contact blocks and add-on modules

See pages B8/37 to B8/45.

Control voltage codes

AC/DC or 24 V DC supply

Volts	24 (DC only)	24-60	48-130	100-250
LC1D09 ...D38, LC1D40A ... D80A				
U 0.85...1.1 Uc		BNE	EHE	KUE
LC1D09 ... D38				
U 0.8 ... 1.2 Uc	BNE			
LC1D40A ... D80A				
U 0.8…1.2 Uc	BBE			

(1) Please check the availability of your variant in the index page B8/57. The SEARCH function of your viewer can be used.
*(2) **LC1D09** to **D80A**: clip-on mounting on 35 mm ⊔ rail **NSYSDR** or screw fixing.*
(3) BTR screws: hexagon socket head. In accordance with local electrical wiring regulations, a size 4 insulated Allen key must be used (reference LADALLEN4, see B8/45).

Product references

PB121708.tif

LC1D09●●●

PB121710.tif

LC1D40A●●●

PB121712.eps

LC1DT60A●●●

Deca Advanced contactors have a dark grey casing and a 3-character code voltage.

3-pole contactors - Load control from 25 to 80 A - Category AC-1

Non inductive loads maximum current (θ ≤ 60 °C) utilisation category AC-1	Number of poles	Instantaneous auxiliary contacts		Partial reference, to be completed by adding the control voltage code [1] / Fixing [2]	Weight
A					kg
Connection by screw clamp terminals					
25	3	1	1	**LC1D09●●●**	0.368
			or	**LC1D12●●●**	0.373
32	3	1	1	**LC1D18●●●**	0.378
40	3	1	1	**LC1D25●●●**	0.433
50	3	1	1	**LC1D32●●●**	0.438
			or	**LC1D38●●●**	0.442
Connection by EverLink®, BTR screw connectors [3]					
60	3	1	1	**LC1D40A●●●**	0.992
80	3	1	1	**LC1D50A●●●**	0.997
			or	**LC1D65A●●●** [4]	1.002
			or	**LC1D80A●●●** [4]	1.002
Connection for lugs or bars					

For LC1D40A to LC1D80A, insert a figure 6 before the voltage code.
Example: LC1D40A●●● becomes LC1D40A6●●●

4-pole contactors

Connection by EverLink®, BTR [3] screw connectors					
60	4	1	1	**LC1DT60A●●●**	1.230
80	4	1	1	**LC1DT80A●●●**	1.290
Connection for lugs or bars					

For LC1DT60A to LC1DT80A, insert a figure 6 before the voltage code.
Example: LC1DT60A●●● becomes LC1DT60A6●●●

4-pole changeover contactors

Connection by EverLink®, BTR [3] screw connectors					
60	4	1	1	**LC2DT60A●●●**	2.460
80	4	1	1	**LC2DT80A●●●**	2.580

Control voltage codes

AC/DC or 24 V DC supply

Volts	24 (DC only)	24-60	48-130	100-250
LC1D09…D80A and LC●DT60A...DT80A				
U 0.85 .... 1.1 Uc		BNE	EHE	KUE
LC1D09 .... D38				
U 0.8 .... 1.2 Uc	BNE			
LC1D40 to LC1D80A, LC●DT60A to LC●DT80A				
U 0.8…1.2 Uc	BBE			

(1) Please check the availability of your variant in the index page B8/57 The SEARCH function of your viewer can be used.
*(2) **LC1D09** to **D80A**, **LC●DT60A** and **LC●DT80A**: clip-on mounting on 35 mm ⊥ rail **NSYSDR** or screw fixing.*
*(3) BTR screws: hexagon socket head. In accordance with local electrical wiring regulations, a size 4 insulated Allen key must be used (reference **LADALLEN4**, see page B8/45).*
(4) Coordination tables according to the number of operation cycles, consult online datasheets for values.

Characteristics: pages B8/84 to B8/91
Curves: page B8/94
Dimensions: pages B8/103 to B8/105
Schemes: pages B8/106 and B8/107
Click **HERE** for access to online contactor selector

Product references

PB121708.tif

LC1D09●●●

PB121710.tif

LC1D40A●●●

Deca Advanced contactors have a dark grey casing and a 3-character code voltage.

3-pole contactors conforming to UL and CSA standards (North American market) - 25 to 80 A

Standard power ratings of motors 50/60 Hz						Associated cable type 75 °C-Cu	Continuous current	Type of contactor required Partial reference, to be completed by adding the control voltage code [1]
Single-phase 1 Ø		3-phase 3 Ø						
115 V	230 V 240 V	200 V 208 V	230 V 240 V	460 V 480 V	575 V 600 V			Fixing, connection [2]
HP	HP	HP	HP	HP	HP		A	
Connection by screw clamp terminals								
1/3	1	2	2	5	7.5	AWG 18 - 10	25	**LC1D09●●●**
0.5	2	3	3	7.5	10	AWG 18 - 10	25	**LC1D12●●●**
1	3	5	5	10	15	AWG 18 - 8	32	**LC1D18●●●**
2	3	7.5	7.5	15	20	AWG 14 - 6	40	**LC1D25●●●**
2	5	10	10	20	25	AWG 14 - 6	50	**LC1D32●●●**
Power connections by EverLink® BTR [3] screw connectors and control by spring terminals								
3	5	10	10	30	30	AWG 16 - 2	60	**LC1D40A●●●**
3	7.5	15	15	40	40	AWG 16 - 2	70	**LC1D50A●●●**
5	10	20	20	40	50	AWG 16 - 2	80	**LC1D65A●●●**
5	10	20	20	40	50	AWG 16 - 2	80	**LC1D80A●●●**

Connection for lugs or bars

For LC1D40A to LC1D80A, insert a figure 6 before the voltage code.
Example: LC1D40A●●● becomes LC1D40A6●●●

Applications with High-Fault Short-Circuit Current ratings

High-fault short-circuit current ratings are: 100 kA at 600 V with Class J fuses and 85 kA (D09-38), 100 kA (D40A-65A) at 480 V and 50 kA at 600 V with circuit breakers.

Control voltage codes

AC/DC 24 V DC supply

Volts	24 (DC only)	24-60	48-130	100-250
LC1D09 ... D32, LC1D40A ... D80A				
U 0.85 .... 1.1 Uc		BNE	EHE	KUE
LC1D09 ... D38				
U 0.8 .... 1.2 Uc	BNE			
LC1D40A ... D80A				
U 0.8…1.2 Uc	BBE			

(1) Please check the availability of your variant in the index page B8/57. The SEARCH function of your viewer can be used.
*(2) **LC1D09** to **D80**: clip-on mounting on 35 mm ⊔ rail **NSYSDR** or screw fixing.*
*(3) BTR screws: hexagon socket head. In accordance with local electrical wiring regulations, a size 4 insulated Allen key must be used (reference **LADALLEN4**, see page B8/45).*

Deca Advanced contactors - Coordination with PLC output modules (static/relay/triac)

Selection of PLC coordinated contactors

Laboratory tests have been carried out in order to validate trouble free contactor closings and openings with different PLC output modules.
The coil must be defined according to the contactor rating range and output module.
See selection table below.

The PLC your are using				>>>	Compatible contactors (1)	Coil code
PLC type	**Output type**	**Output I (A)**	**Output module commercial reference**			
M221 / M241 / M251	Static output: 24 V DC	0.5	TM3DQ8●●● and Q16●●● (T, TG, U, UG)	>>>	LC1D09●● to LC1D38●●,	BL, BNE
					LC1D40A●●● to LC1D80A, LC1DT60A●●● to LC1DT80A●●●	BBE
		0.3 (sealed) 0.8 (inrush)	TM3XTYS4	>>>	LC1D40A●●● to LC1D80A, LC1DT60A●●● to LC1DT80A●●●	BBE, BD, BNE
		0.1	TM3DQ16●● and Q32●● (TK, UK)	>>>	LC1D09●● to LC1D38●●	BL
	Relay output: 24 V DC / 230 V AC	2	TM3DQ8 and DQ16 (R,RG), TM3DM8 and DM24 (R,RG)	>>>	LC1D09●● to LC1D38●●, LC1D40A●●● to LC1D80A, LC1DT60A●●● to LC1DT80A●●●	Code of any DC coil up to 24 V or any AC coil up to 230 V
M340 / M580	Static output: 24 V DC	0.5	BMXDDO1602 and DM16022	>>>	LC1D09●● to LC1D38●●	BL, BNE
					LC1D40A●●● to LC1D80A, LC1DT60A●●● to LC1DT80A●●●	BBE
		0.1	BMXDDO3202, BMXDDM3202K, BMXDDO6402K	>>>	LC1D09●● to LC1D38●●	BL
	Relay output: 24 V DC / 230 V AC	2	BMXDRA0805 and DM16025	>>>	LC1D09●● to LC1D38●●, LC1D40A●●● to LC1D80A, LC1DT60A●●● to LC1DT80A●●●	Code of any DC coil up to 24 V or any AC coil up to 230 V
	Triac output: 230 V AC	0.6	BMXDAO1605	>>>	LC1D09●● to LC1D38●●, LC1D40●●● to LC1D80A●●●, LC1DT60A●●● to LC1DT80A●●●	Code of any AC coil up to 230 V (P7 code = 230 V)
ADVANTYS	Static output: 24 V DC	0.5	STBDDO3200	>>>	LC1D09●● to LC1D38●●	BL, BNE
					LC1D40A●●● to LC1D80A, LC1DT60A●●● to LC1DT80A●●●	BBE
	Triac output: 230 V AC	2	STBDAO8210	>>>	LC1D09●● to LC1D38●●, LC1D40A●●● to LC1D80A, LC1DT60A●●● to LC1DT80A●●●	Code of any AC coil up to 230 V (P7 code = 230 V AC)

Coils consumption characteristics

Coil type	Uc DC - min -max	Average consumption at UC DC / 20 °C	
		Inrush	Sealed
BL	24 V - 0.8 Uc to 1.1 Uc	2.4 W - 2.4 VA	2.4 W - 2.4 VA
BNE		14 W - 14 VA	0.7 W - 0.7 VA
BBE		11 W - 11 VA	0.5 W - 0.5 VA

*(1) Replace dot by coil code. Ex **LC1D09●●** becomes **LC1D09BL**.*

Life Is On Schneider Electric

PB121681.eps

LC1D09●●

PB121706.tif

LC1D25●●

PB121707.tif

LC1D80A●●

PB123774.tif

LC1D95●●

PB123775.tif

LC1D115●●

3-pole contactors - Motor control up to 75 kW at 400 V, in category AC-3/AC-3e

Standard power ratings of 3-phase motors 50-60 Hz in category AC-3/AC-3e (θ ≤ 60 °C)							Rated operational current in AC-3/AC-3e 440 V up to	Instantaneous auxiliary contacts		Basic reference, to be completed by adding the control voltage code [1] / Fixing [2]	Weight [3]
220 V 230 V	380 V 400 V	415 V	440 V	500 V	660 V 690 V	1000 V					
kW	kW	kW	kW	kW	kW	kW	A				kg
Connection by screw clamp terminals											
2.2	4	4	4	5.5	5.5	–	9	1	1	**LC1D09●●**	0.320
3	5.5	5.5	5.5	7.5	7.5	–	12	1	1	**LC1D12●●**	0.325
4	7.5	9	9	10	10	–	18	1	1	**LC1D18●●**	0.330
5.5	11	11	11	15	15	–	25	1	1	**LC1D25●●**	0.370
7.5	15	15	15	18.5	18.5	–	32	1	1	**LC1D32●●**	0.375
9	18.5	18.5	18.5	18.5	18.5	–	38	1	1	**LC1D38●●**	0.380
Power connections by EverLink® BTR screw connectors [4] and control by screw clamp terminal											
11	18.5	22	22	22	30	–	40	1	1	**LC1D40A●●**	0.850
15	22	25	30	30	33	–	50	1	1	**LC1D50A●●**	0.855
18.5	30	37	37	37	37	–	65	1	1	**LC1D65A●●**	0.860
22	37	37	37	37	37	–	66	1	1	**LC1D80A●●**	0.860
Connection by screw clamp terminals or connectors											
22	37	45	45	55	45	–	80	1	1	**LC1D80●●**	1.590
25	45	45	45	55	45	–	95	1	1	**LC1D95●●**	1.610
30	55	59	59	75	80	65	115	1	1	**LC1D115●●**	2.500
40	75	80	80	90	100	75	150	1	1	**LC1D150●●**	2.500

Connection by lugs or bars

In the references selected above, insert a figure **6** before the voltage code.
Example: **LC1D09●●** becomes **LC1D096●●**.

Separate components

Auxiliary contact blocks and add-on modules: see pages B8/37 to B8/45.

Standard control circuit voltages (for other voltages, please consult your Regional Sales Office)

a.c. supply

Volts	24	42	48	110	115	220	230	240	380	400	415	440	500
LC1D09…D150 (D115 and D150 coils with built-in suppression as standard, by bi-directional peak limiting diode).													
50/60 Hz	B7	D7	E7	F7	FE7	M7	P7	U7	Q7	V7	N7	R7	S7
LC1D09…D65 (not available with "connection for lugs or bars")													
50 Hz	B5	D5	E5				P5						
LC1D80…D115													
50 Hz	B5	D5	E5	F5	FE5	M5	P5	U5	Q5	V5	N5	R5	S5
60 Hz	B6	–	E6	F6	–	M6	–	U6	Q6	–	–	R6	–

d.c. supply

Volts	12	24	36	48	60	72	110	125	220	250	440
LC1D09…D38 (coils with integral suppression device fitted as standard, by bi-directional peak limiting diode)											
U 0.7…1.25 Uc	JD	BD	CD	ED	ND	SD	FD	GD	MD	UD	RD
LC1D40A …D65A (coils with integral suppression device fitted as standard, by bi-directional peak limiting diode)											
U 0.75…1.25 Uc	JD	[5]	[5]	[5]	[5]	[5]	[5]	[5]	[5]	[5]	RD
LC1D80…D95											
U 0.85…1.1 Uc	JD	BD	CD	ED	ND	SD	FD	GD	MD	UD	RD
U 0.75…1.2 Uc	JW	BW	CW	EW	–	SW	FW	–	MW	–	–
LC1D115 and D150 (coil with built-in suppression device as standard)											
U 0.75…1.2 Uc	–	BD	–	ED	ND	SD	FD	GD	MD	UD	RD

Low consumption DC (for low consumption AC/DC: Deca Advanced contactors, page B8/19)

Volts ⎓	5	12	20	24	48	110	220	250
LC1D09…D38 (coils with integral suppression device fitted as standard, by bi-directional peak limiting diode)								
U 0.8…1.25 Uc	AL	JL	ZL	BL	EL	FL	ML	UL

For other voltages between 5 and 690 V, see pages B8/48 to B8/51.

(1) Please check the availability of your variant in the index page B8/57. The SEARCH function of your viewer can be used.

(2) LC1D09 to D80A: clip-on mounting on 35 mm ⊥ rail NSYSDR or screw fixing.
LC1D80 to D95 ∿: clip-on mounting on 35 mm ⊥ rail NSYSDR or 75 mm ⊥ rail AM1DL or screw fixing.
LC1D80 to D95 ⎓: clip-on mounting on 75 mm ⊥ rail AM1DL or screw fixing.
LC1D115 and D150: clip-on mounting on 2 x 35 mm ⊥ rails NSYSDR or screw fixing.

*(3) The weights indicated are for contactors with a.c. control circuit. For d.c. or low consumption control circuit, add 0.160 kg from **LC1D09** to **D38**, 0.075 kg from **LC1D40A** to **D80A** and 1 kg for **LC1D80** and **D95**.*

*(4) BTR screws: hexagon socket head. In accordance with local electrical wiring regulations, a size 4 insulated Allen key must be used (reference **LADALLEN4**, see page B8/45).*

*(5) For these coil voltages, choose from Deca Advanced contactors. Same product ref. radical, just add BBE coil voltage code for 24 V DC, BNE for 24-60V AC/DC, EHE for 48-130 V AC/DC, KUE for 100-250 V AC/DC. Example: **LC1D40ABBE**.*

Characteristics: pages B8/84 to B8/91
Dimensions: pages B8/99 to B8/105
Schemes: pages B8/106 and B8/107
Click **HERE** for access to online contactor selector

PB121713.tif

LC1D123●●

PB121723.eps

LC1D80A3●●

3-pole contactors - Motor control up to 30 kW at 400 V, in category AC-3/AC-3e

Standard power ratings of 3-phase motors 50-60 Hz in category AC-3/AC-3e (θ ≤ 60 °C)							Rated operational current in AC-3/AC-3e 440 V up to	Instantaneous auxiliary contacts		Basic reference, to be completed by adding the control voltage code (1) Fixing (2)
220 V 230 V	380 V 400 V	415 V	440 V	500 V	660 V 690 V	1000 V				
kW	kW	kW	kW	kW	kW	kW	A			
Power and control connections by spring terminals										
2.2	4	4	4	5.5	5.5		9	1	1	**LC1D093●●**
3	5.5	5.5	5.5	7.5	7.5		12	1	1	**LC1D123●●**
4	7.5	9	9	10	10		18	1	1	**LC1D183●●**
5.5	11	11	11	15	15		25	1	1	**LC1D253●●**
7.5	11	11	11	15	15		32 (3)	1	1	**LC1D323●●**
Power connections by EverLink® BTR screw connectors (4) and control by spring terminals										
11	18.5	22	22	22	30		40	1	1	**LC1D40A3●●**
15	22	25	30	30	33		50	1	1	**LC1D50A3●●**
18.5	30	37	37	37	37		65	1	1	**LC1D65A3●●**
22	37	37	37	37	37		66	1	1	**LC1D80A3●●**

Connection by Faston connectors

These contactors are fitted with Faston connectors: 2 x 6.35 mm on the power poles and 1 x 6.35 mm on the coil and auxiliary terminals.
For contactors LC1D09 and LC1D12 only, replace the figure **3** with a **9** in the references selected above.
Example: **LC1D093●●** becomes **LC1D099●●**.

Separate components

Auxiliary contact blocks and add-on modules: see pages B8/37 to B8/45.

Standard control circuit voltages (for other voltages, please consult your Regional Sales Office)

a.c. supply												
Volts	**24**	**42**	**48**	**110**	**115**	**220**	**230**	**240**	**380**	**400**	**415**	**440**
LC1D09…D80A												
50/60 Hz	B7	D7	E7	F7	FE7	M7	P7	U7	Q7	V7	N7	R7
d.c. supply												
Volts	**12**	**24**	**36**	**48**	**60**	**72**	**110**	**125**	**220**	**250**	**440**	
LC1D09…D32 (coils with integral suppression device fitted as standard, by bi-directional peak limiting diode)												
U 0.7…1.25 Uc	JD	BD	CD	ED	ND	SD	FD	GD	MD	UD	RD	
LC1D40A…D65A (coils with integral suppression device fitted as standard, by bi-directional peak limiting diode)												
U 0.75…1.25 Uc	JD	BD	CD	ED	ND	SD	FD	GD	MD	UD	RD	
Low consumption												
Volts ⎓	**5**	**12**	**20**	**24**	**48**	**110**	**220**	**250**				
LC1D09…D32 (coils with integral suppression device fitted as standard, by bi-directional peak limiting diode)												
U 0.8…1.25 Uc	AL	JL	ZL	BL	EL	FL	ML	UL				

For other voltages between 5 and 690 V, see pages B8/48 to B8/51.
(1) Please check the availability of your variant in the index page B8/57. The SEARCH function of your viewer can be used.
(2) LC1D09 to D32: clip-on mounting on 35 mm ⊥ rail NSYSDR or screw fixing.
*(3) Must be wired with 2 x 4 mm² cables in parallel on the upstream side. On the downstream side, outgoing terminal block **LAD331** may be used (Quickfit technology, see page B1/18). When wired with a single cable, the product is limited to 25 A (11 kW/400 V motors).*
*(4) BTR screws: hexagon socket head. In accordance with local electrical wiring regulations, a size 4 insulated Allen key must be used (reference **LADALLEN4**, see page B8/45).*

PB121681.eps

LC1D09●●

PB121723.eps

LC1D80A●●

3-pole contactors - Load control from 25 to 200 A in category AC-1

Non inductive loads maximum current (θ ≤ 60 °C) utilisation category AC-1	Number of poles	Instantaneous auxiliary contacts		Basic reference, to be completed by adding the control voltage code (1) / Fixing (2)	Weight (3)
A					kg
Connection by screw clamp terminals					
25	3	1	1	**LC1D09●●**	0.320
				or **LC1D12●●**	0.325
32	3	1	1	**LC1D18●●**	0.330
40	3	1	1	**LC1D25●●**	0.370
50	3	1	1	**LC1D32●●**	0.375
				or **LC1D38●●**	0.380
Connection by EverLink®, BTR screw connectors (4)					
60	3	1	1	**LC1D40A●●**	0.850
80	3	1	1	**LC1D50A●●**	0.855
				or **LC1D65A●●** (5)	0.860
				or **LC1D80A●●** (5)	0.860
Connection by screw clamp terminals or connectors					
125	3	1	1	**LC1D80●●**	1.590
				or **LC1D95●●** (5)	1.610
200	3	1	1	**LC1D115●●**	2.500
				or **LC1D150●●** (6)	2.500

3-pole contactors for connection by lugs

In the references selected above, insert a figure **6** before the voltage code.
Example: **LC1D09●●** becomes **LC1D096●●**.

Standard control circuit voltages
(for other voltages, please consult your Regional Sales Office)

a.c. supply													
Volts	**24**	**42**	**48**	**110**	**115**	**220**	**230**	**240**	**380**	**400**	**415**	**440**	**500**
LC1D09...D150 (LC1D115 and D150 coils with built-in suppression device as standard)													
50/60 Hz	B7	D7	E7	F7	FE7	M7	P7	U7	Q7	V7	N7	R7	S7
LC1D09…D65 (not available with "connection for lugs or bars")													
50 Hz	B5	D5	E5				P5						
LC1D80...D150													
50 Hz	B5	D5	E5	F5	FE5	M5	P5	U5	Q5	V5	N5	R5	S5
60 Hz	B6	–	E6	F6	–	M6	–	U6	Q6	–	–	R6	–
d.c. supply													
Volts	**12**	**24**	**36**	**48**	**60**	**72**	**110**	**125**	**220**	**250**	**440**		
LC1D09…D38 (coils with integral suppression device fitted as standard, by bi-directional peak limiting diode)													
U 0.7…1.25 Uc	JD	BD	CD	ED	ND	SD	FD	GD	MD	UD	RD		
LC1D40A …D65A (coils with integral suppression device fitted as standard, by bi-directional peak limiting diode)													
U 0.75…1.25 Uc	JD	(7)	(7)	(7)	(7)	(7)	(7)	(7)	(7)	(7)	RD		
LC1 or LP1D80 and **D95**													
U 0.85…1.1 Uc	JD	BD	CD	ED	ND	SD	FD	GD	MD	UD	RD		
U 0.75…1.2 Uc	JW	BW	CW	EW	–	SW	FW	–	MW	–	–		
LC1D115 and **D150** (coils with built-in suppression device fitted as standard)													
U 0.75…1.2 Uc	–	BD	–	ED	ND	SD	FD	GD	MD	UD	RD		
Low consumption													
Volts ⎓	**5**	**12**	**20**	**24**	**48**	**110**	**220**	**250**					
LC1D09…D38 (coils with integral suppression device fitted as standard, by bi-directional peak limiting diode)													
U 0.8…1.25 Uc	AL	JL	ZL	BL	EL	FL	ML	UL					

For other voltages between 5 and 690 V, see pages B8/48 to B8/51.

(1) Please check the availability of your variant in the index page B8/58. The SEARCH function of your viewer can be used.

*(2) **LC1D09** to **D80A**: clip-on mounting on 35 mm ⊥ rail **NSYSDR** or screw fixing.*
*__LC1D80__ and __D95__ ∿: clip-on mounting on 35 mm ⊥ rail **NSYSDR** or 75 mm ⊥ rail **AM1DL** or screw fixing.*
*__LC1__ or __LP1D80__ to __D95__ ⎓: clip-on mounting on 75 mm ⊥ rail **AM1DL** or screw fixing.*
*__LC1D115__ and __D150__: clip-on mounting on 2 x 35 mm ⊥ rails **NSYSDR** or screw fixing.*

*(3) The weights indicated are for contactors with a.c. control circuit. For d.c. or low consumption control circuit, add 0.160 kg from **LC1D09** to **D38**, 0.075 kg from **LC1D40A** to **D80A** and 1 kg for **LC1D80** and **D95**.*

*(4) BTR screws: hexagon socket head. In accordance with local electrical wiring regulations, a size 4 insulated Allen key must be used (reference **LADALLEN4**, see page B8/45).*

(5) Coordination tables according to the number of operating cycles, see AC-1 curve, page page A5/102.

(6) 32 A with 2 x 4 mm² cables connected in parallel.

*(7) For these coil voltages, choose from Deca Advanced contactors. Same product ref. radical, just add BBE coil voltage code for 24 V DC, BNE for 24-60 V AC/DC, EHE for 48-130 V AC/DC, KUE for 100-250 V AC/DC. Example: **LC1D40ABBE**.*

PB121713.tif

LC1D123●●

PB121723.eps

LC1D80A3●●

3-pole contactors - Load control from 16 to 80 A in category AC-1

Non inductive loads maximum current (θ ≤ 60 °C) utilisation category AC-1	Number of poles	Instantaneous auxiliary contacts		Basic reference, to be completed by adding the control voltage code (1) / Fixing (2)	Weight (3)
A					kg
Connection by spring terminals					
16	3	1	1	**LC1D093●●** (4)	0.320
				or **LC1D123●●** (4)	0.325
25	3	1	1	**LC1D183●●** (5)	0.335
				or **LC1D253●●** (6)	0.325
				or **LC1D323●●** (6)	0.325
Power connections by EverLink® BTR screw connectors (7) and control by spring terminals					
60	3	1	1	**LC1D40A3●●**	0.850
80	3	1	1	**LC1D50A3●●** (8)	0.855
				or **LC1D65A3●●** (8)	0.860
				or **LC1D80A3●●** (8)	0.860

3-pole contactors for connection by Faston connectors

These contactors are fitted with Faston connectors: 2 x 6.35 mm on the power poles and 1 x 6.35 mm on the coil terminals. For contactors LC1D09 and LC1D12 only, in the references selected from the previous page, insert a figure **9** before the voltage code. Example: **LC1D09●●** becomes **LC1D099●●**.

Separate components

Auxiliary contact blocks and add-on modules: see pages B8/37 to B8/45.

Standard control circuit voltages
(for other voltages, please consult your Regional Sales Office)

a.c. supply													
Volts	**24**	**42**	**48**	**110**	**115**	**220**	**230**	**240**	**380**	**400**	**415**	**440**	**500**
LC1D09...D80A													
50/60 Hz	B7	D7	E7	F7	FE7	M7	P7	U7	Q7	V7	N7	R7	S7
d.c. supply													
Volts	**12**	**24**	**36**	**48**	**60**	**72**	**110**	**125**	**220**	**250**	**440**		
LC1D09…D32 (coils with integral suppression device fitted as standard, by bi-directional peak limiting diode)													
U 0.7…1.25 Uc	JD	BD	CD	ED	ND	SD	FD	GD	MD	UD	RD		
LC1D40A…D65A (coils with integral suppression device fitted as standard, by bi-directional peak limiting diode)													
U 0.75…1.25 Uc	JD	BD	CD	ED	ND	SD	FD	GD	MD	UD	RD		
Low consumption													
Volts ⎓	**5**	**12**	**20**	**24**	**48**	**110**	**220**	**250**					
LC1D09…D32 (coils with integral suppression device fitted as standard, by bi-directional peak limiting diode)													
U 0.8…1.25 Uc	AL	JL	ZL	BL	EL	FL	ML	UL					

For other voltages between 5 and 690 V, see pages B8/48 to B8/51.

(1) Please check the availability of your variant in the index page B8/59. The SEARCH function of your viewer can be used.
*(2) **LC1D09** to **D80A**: clip-on mounting on 35 mm ⊥ rail **NSYSDR** or screw fixing.*
*(3) The weights indicated are for contactors with a.c. control circuit. For d.c. or low consumption control circuit, add 0.160 kg from **LC1D09** to **D38** and 0.075 kg from **LC1D40A** to **D80A**.*
(4) 20 A with 2 x 2.5 mm² cables connected in parallel.
(5) 32 A with 2 x 4 mm² cables connected in parallel.
(6) 40 A with 2 x 4 mm² cables connected in parallel.
*(7) BTR screws: hexagon socket head. In accordance with local electrical wiring regulations, a size 4 insulated Allen key must be used (reference **LADALLEN4**, see page B8/45).*
(8) Coordination tables according to the number of operating cycles, see AC-1 curve, page A5/102.

PB121714.tif

LC1DT20●●

PB121715.tif

LC1DT80A●●

PB123776.eps

LC1D65008●●

4-pole contactors - Load control, 20 to 200 A in category AC-1

Non inductive loads maximum current (θ ≤ 60 °C) utilisation category AC-1	Number of poles		Instantaneous auxiliary contacts			Basic reference, to be completed by adding the control voltage code (1) / Fixing (2)	Weight (3)
A							kg
Connection by screw clamp terminals							
20	4	–	1	1		**LC1DT20●●**	0.365
	2	2	1	1		**LC1D098●●**	0.365
25	4	–	1	1		**LC1DT25●●**	0.365
	2	2	1	1		**LC1D128●●**	0.365
32	4	–	1	1		**LC1DT32●●**	0.425
	2	2	1	1		**LC1D188●●**	0.425
40	4	–	1	1		**LC1DT40●●**	0.425
	2	2	1	1		**LC1D258●●**	0.425
Connection by EverLink®, BTR screw connectors							
60	4	–	1	1		**LC1DT60A●●**	1.090
80	4	–	1	1		**LC1DT80A●●**	1.150
Connection by screw clamp terminals or connectors							
60	2	2	–	–		**LC1D40008●●**	1.440
					or	**LP1D40008●●**	2.210
80	2	2	–	–		**LC1D65008●●**	1.450
					or	**LP1D65008●●**	2.220
125	4	–	–	–		**LC1D80004●●**	1.760
					or	**LP1D80004●●**	2.685
	2	2	–	–		**LC1D80008●●**	1.840
					or	**LP1D80008●●**	2.910
200	4	–	–	–		**LC1D115004●●**	2.860

4-pole contactors for connection by lugs or bars

In the references selected above, insert a figure 6 before the voltage code.
Example: **LC1DT20●●** becomes **LC1DT206●●**.

Standard control circuit voltages (for other voltages, please consult your Regional Sales Office)

a.c. supply													
Volts	**24**	**42**	**48**	**110**	**115**	**220**	**230**	**240**	**380**	**400**	**415**	**440**	**500**
LC1D09...D150 and LC1DT20...DT80A (LC1D115 and D150 coils with built-in suppression device as standard)													
50/60 Hz	B7	D7	E7	F7	FE7	M7	P7	U7	Q7	V7	N7	R7	–
LC1D80...D115													
50 Hz	B5	D5	E5	F5	FE5	M5	P5	U5	Q5	V5	N5	R5	S5
60 Hz	B6	–	E6	F6	–	M6	–	U6	Q6	–	–	R6	–

d.c. supply											
Volts	**12**	**24**	**36**	**48**	**60**	**72**	**110**	**125**	**220**	**250**	**440**
LC1D09…D25 and LC1DT20...DT40 (coils with integral suppression device fitted as standard, by bi-directional peak limiting diode)											
U 0.75…1.25 Uc	JD	BD	CD	ED	ND	SD	FD	GD	MD	UD	RD
LC1DT60A …DT80A (coils with integral suppression device fitted as standard, by bi-directional peak limiting diode)											
U 0.75…1.25 Uc	JD	(4)	(4)	(4)	(4)	(4)	(4)	(4)	(4)	(4)	RD
LP1D40...D80											
U 0.85…1.1 Uc	JD	BD	CD	ED	ND	SD	FD	GD	MD	UD	RD
U 0.75…1.2 Uc	JW	BW	CW	EW	–	SW	FW	–	MW	–	–
LC1D115 (coil with built-in suppression device as standard)											
U 0.75…1.2 Uc	–	BD	–	ED	ND	SD	FD	GD	MD	UD	RD

Low consumption								
Volts ⎓	**5**	**12**	**20**	**24**	**48**	**110**	**220**	**250**
LC1D09...D25 and LC1DT20...DT40 (coils with integral suppression device fitted as standard, by bi-directional peak limiting diode)								
U 0.8…1.25 Uc	AL	JL	ZL	BL	EL	FL	ML	UL

For other voltages between 5 and 690 V, see pages B8/48 to B8/51.
(1) Please check the availability of your variant in the index page B8/59. The SEARCH function of your viewer can be used.
*(2) **LC1D09** to **D38** and **LC1DT20** to **DT80A**: clip-on mounting on 35 mm ⊥ rail **NSYSDR** or screw fixing.*
*__LC1D80__ ∿: clip-on mounting on 35 mm ⊥ rail **NSYSDR** or 75 mm ⊥ rail **AM1DL** or screw fixing.*
*__LC1__ or __LP1D80__ ⎓: clip-on mounting on 75 mm ⊥ rail **AM1DL** or screw fixing.*
*__LC1D115__ and __D150__: clip-on mounting on 2 x 35 mm ⊥ rails **NSYSDR** or screw fixing.*
*(3) The weights indicated are for contactors with a.c. control circuit. For d.c. or low consumption control circuit, add 0.160 kg from **LC1D09** to **D38**, 0.075 kg from **LC1DT60A** and **D80A** and 1 kg for **LC1D80**.*
*(4) For these coil voltages, choose from Deca Advanced contactors. Same product ref. radical, just add BBE coil voltage code for 24 V DC, BNE for 24-60 V AC/DC, EHE for 48-130 V AC/DC, KUE for 100-250 V AC/DC. Example: **LC1DT60ABBE**.*

Characteristics: pages B8/84 to B8/91
Dimensions: pages B8/99 to B8/105
Schemes: pages B8/106 and B8/107
Click **HERE** for access to online contactor selector

PB121716.tif

LC1DT253●●

PB121715.tif

LC1DT80A3●●

4-pole contactors - Load control, 20 to 80 A in category AC-1

Non inductive loads maximum current (θ ≤ 60 °C) utilisation category AC-1	Number of poles	Instantaneous auxiliary contacts		Basic reference, to be completed by adding the voltage code (1) / Fixing (2)	Weight (3)
A					kg
Connection by spring terminals					
20	4 –	1	1	**LC1DT203●●**	0.380
	2 2	1	1	**LC1D0983●●**	0.380
25	4 –	1	1	**LC1DT253●●**	0.380
	2 2	1	1	**LC1D1283●●**	0.380
32	4 –	1	1	**LC1DT323●●**	0.425
	2 2	1	1	**LC1D1883●●**	0.425
40	4 –	1	1	**LC1DT403●●**	0.425
	2 2	1	1	**LC1D2583●●**	0.425
Connection by EverLink®, BTR screw connectors and control circuit by spring terminals					
60	4 –	1	1	**LC1DT60A3●●**	1.090
80	4 –	1	1	**LC1DT80A3●●**	1.150

Separate components

Auxiliary contact blocks and add-on modules: see pages B8/37 to B8/45.

Standard control circuit voltages
(for other voltages, please consult your Regional Sales Office)

a.c. supply

Volts	24	42	48	110	115	220	230	240	380	400	415	440	500
LC1D09...D25 and LC1DT20...DT80A (coils with integral suppression device fitted as standard, by bi-directional peak limiting diode)													
50/60 Hz	B7	D7	E7	F7	FE7	M7	P7	U7	Q7	V7	N7	R7	–

d.c. supply

Volts	12	24	36	48	60	72	110	125	220	250	440
LC1D09…D25 and LC1DT20... DT40 (coils with integral suppression device fitted as standard, by bi-directional peak limiting diode)											
U 0.7…1.25 Uc	JD	BD	CD	ED	ND	SD	FD	GD	MD	UD	RD
LC1DT60A...80A (coils with integral suppression device fitted as standard, by bi-directional peak limiting diode)											
U 0.75…1.25 Uc	JD	BD	CD	ED	ND	SD	FD	GD	MD	UD	RD

Low consumption

Volts ⎓	5	12	20	24	48	110	220	250
LC1D09...D25 and LC1DT20...DT40 (coils with integral suppression device fitted as standard, by bi-directional peak limiting diode)								
U 0.8…1.25 Uc	AL	JL	ZL	BL	EL	FL	ML	UL

For other voltages between 5 and 690 V, see pages B8/48 to B8/51.

(1) Please check the availability of your variant in the index page B8/59. The SEARCH function of your viewer can be used.

*(2) **LC1D09** to **D38** and **LC1DT20** to **DT80A**: clip-on mounting on 35 mm ⊔ rail **NSYSDR** or screw fixing.*

*(3) The weights indicated are for contactors with a.c. control circuit. For d.c. or low consumption control circuit, add 0.160 kg from **LC1D09** to **D38**, 0.075 kg for **LC1DT60A** and **DT80A**.*

PB121681.eps

LC1D09●●

PB121706.tif

LC1D25●●

PB121707.tif

LC1D80A●●

PB123774.eps

LC1D95●●

Contactors conforming to UL and CSA standards (North American market) - 25 to 160 A

Standard power ratings of motors 50/60 Hz						Associated cable type 75 °C-Cu	UL continuous current	Type of contactor required Basic reference, to be completed by adding the control voltage code (1)
Single-phase 1 Ø		3-phase 3 Ø						
120 V	240 V	208 V	240 V	480 V	600 V			Fixing, connection (2)
HP	HP	HP	HP	HP	HP		A	
Connection by screw clamp terminals								
1/3	1	2	2	5	7.5	AWG 18 - 10	25	**LC1D09●●**
0.5	2	3	3	7.5	10	AWG 18 - 10	25	**LC1D12●●**
1	3	5	5	10	15	AWG 18 - 8	32	**LC1D18●●**
2	3	7.5	7.5	15	20	AWG 14 - 6	40	**LC1D25●●**
2	5	10	10	20	25	AWG 14 - 6	50	**LC1D32●●** (3)
2	5	10	10	20	25	AWG 14 - 6	50	**LC1D38●●** (3)
Power connections by EverLink® BTR screw connectors and control by spring terminals								
3	5	10	10	30	30	AWG 16 - 2	60	**LC1D40A●●**
3	7.5	15	15	40	40	AWG 16 - 2	70	**LC1D50A●●**
5	10	20	20	40	50	AWG 16 - 2	80	**LC1D65A●●**
5	10	20	20	40	50	AWG 16 - 2	80	**LC1D80A●●**
Connection by screw clamp terminals or connectors								
7.5	15	25	30	60	60	AWG 10 - 2	110	**LC1D80●●**
7.5	15	25	30	60	60	AWG 10 - 2	110	**LC1D95●●**
–	–	30	40	75	100	AWG 8-1/0	160	**LC1D115●●**
–	–	40	50	100	125	AWG 8-1/0	160	**LC1D150●●**

Applications with High-Fault Short-Circuit ratings

High-fault short-circuit current ratings are: 100 kA (D09-80, D115-150) at 600 V with Class J fuses and 85 kA (D09-38), 100 kA (D40A-80, D115-150) at 480 V and 50 kA (D09-80, D115-150) at 600 V with circuit breakers.

Application example

For a 15 HP-230 V motor
Select a contactor type **LC1D50A**.
Information: the contactor rating selected corresponds to “size 2”, the associated cable is type AWG3 75 °C-Cu.

Standard control circuit voltages (for other voltages, please consult your Regional Sales Office)

a.c. supply

Volts	24	42	48	110	115	120	208	220	230	240	380	400	415	440	480	500
LC1D09…D150 (D115 and D150 coils with built-in suppression device as standard)																
50/60 Hz	B7	D7	E7	F7	FE7	G7 (4)	LE7 (4)	M7	P7	U7	Q7	V7	N7	R7	T7 (4)	S7
LC1D09…D65 (not available with "connection for lugs or bars")																
50 Hz	B5	D5	E5						P5							
LC1D80…D115																
50 Hz	B5	D5	E5	F5	FE5	G5	–	M5	P5	U5	Q5	V5	N5	R5	–	S5
60 Hz	B6	–	E6	F6	–	G6	L6	M6	–	U6	Q6	–	–	R6	T6	–

d.c. supply

Volts	12	24	36	48	60	72	110	125	220	250	440
LC1D09…D32 (coils with integral suppression device fitted as standard, by bi-directional peak limiting diode)											
U 0.7…1.25 Uc	JD	BD	CD	ED	ND	SD	FD	GD	MD	UD	RD
LC1D40A…D65A (coils with integral suppression device fitted as standard, by bi-directional peak limiting diode)											
U 0.75…1.25 Uc	JD	(5)	(5)	(5)	(5)	(5)	(5)	(5)	(5)	(5)	RD
LC1D80 and D95											
U 0.85…1.1 Uc	JD	BD	CD	ED	ND	SD	FD	GD	MD	UD	RD
U 0.75…1.2 Uc	JW	BW	CW	EW	–	SW	FW	–	MW	–	–
LC1D115 and D150 (coils with built-in suppression device as standard)											
U 0.75…1.2 Uc	–	BD	–	ED	ND	SD	FD	GD	MD	UD	RD

Low consumption

Volts ⎓	5	12	20	24	48	72	110	220	250
LC1D09…D38 (coils with integral suppression device fitted as standard, by bi-directional peak limiting diode)									
U 0.8…1.25 Uc	AL	JL	ZL	BL	EL	SL	FL	ML	UL

(1) Please check the availability of your variant in the index page B8/59. The SEARCH function of your viewer can be used.
*(2) **LC1D09** to **D65A**: clip-on mounting on 35 mm ⊥ rail **NSYSDR** or screw fixing.*
*__LC1D80__ and **LC1D95**: clip-on mounting on 35 mm ⊥ rail **NSYSDR** or 75 mm ⊥ rail **AM1DL** or screw fixing.*
*__LC1D115__ and **D150**: clip-on mounting on 2 x 35 mm ⊥ rails **NSYSDR** or screw fixing.*
*(3) Versions with spring terminals **LC1D323** and **LC1D383** are not certified UL/CSA.*
*(4) Contactors **LC1D40A**, **50A**, **65A**, **80A**: for this coil voltage use is only on 60 Hz.*
*(5) For these coil voltages, choose from Deca Advanced contactors. Same product ref. radical, just add BBE coil voltage code for 24 V DC, BNE for 24-60 V AC/DC, EHE for 48-130 V AC/DC, KUE for 100-250 V AC/DC. Example: **LC1D40ABBE**.*

Characteristics:
pages B8/84 to B8/91

Dimensions:
pages B8/99 to B8/105

Schemes:
pages B8/106 and B8/107

Click **HERE** for access to online contactor selector

PB121717.tif

LC2D12●●

PB121685.eps

LC2D65A●●

PB123819.tif

LC2D1156●●

3-pole reversing contactors - Motors up to 75 kW / 400 V in category AC-3/AC-3e

Horizontally mounted - Pre-wired power connections.

Standard power ratings of 3-phase motors 50-60 Hz in category AC-3/AC-3e (θ ≤ 60 °C)							Rated operational current in AC-3/AC-3e 440 V up to	Instantaneous auxiliary contacts per contactor		Contactors supplied with coil Basic reference, to be completed by adding the control voltage code (1) Fixing (2)	Weight (3)
220 V 230 V	380 V 400 V	415 V	440 V	500 V	660 V 690 V	1000 V					
kW	kW	kW	kW	kW	kW	kW	A				kg
With mechanical interlock, without electrical interlocking, for connection by screw clamp terminals or connectors											
2.2	4	4	4	5.5	5.5	–	9	1	1	**LC2D09●●** (4)	0.687
3	5.5	5.5	5.5	7.5	7.5	–	12	1	1	**LC2D12●●** (4)	0.697
4	7.5	9	9	10	10	–	18	1	1	**LC2D18●●** (4)	0.707
5.5	11	11	11	15	15	–	25	1	1	**LC2D25●●** (4)	0.787
7.5	15	15	15	18.5	18.5	–	32	1	1	**LC2D32●●** (4)	0.797
9	18.5	18.5	18.5	18.5	18.5	–	38	1	1	**LC2D38●●** (4)	0.807
11	18.5	22	22	22	30	–	40	1	1	**LC2D40A●●**	1.870
15	22	25	30	30	33	–	50	1	1	**LC2D50A●●**	1.880
18.5	30	37	37	37	37	–	65	1	1	**LC2D65A●●**	1.890
22	37	45	45	55	45	–	80	1	1	**LC2D80●●**	3.200
25	45	45	45	55	45	–	95	1	1	**LC2D95●●**	3.200
With mechanical interlock and electrical interlocking, for connection by screw clamp terminals or connectors											
30	55	59	59	75	80	65	115	1	1	**LC2D115●●**	6.350
40	75	80	80	90	100	75	150	1	1	**LC2D150●●**	6.400

Connection by lugs or bars

For reversing contactors LC2D09 to LC2D38, LC2D115 and LC2D150, in the references selected above, insert a figure **6** before the voltage code. Example: **LC2D09●●** becomes **LC2D096●●**.
To build a 40 to 65 A reversing contactor, for connection by lugs, order 2 contactors **LC1D●●A6** and mechanical interlock **LAD4CM** (see page B8/46).

Component parts

Auxiliary contact blocks and add-on modules: see pages B8/37 to B8/45.

Standard control circuit voltages (for other voltages, please consult your Regional Sales Office)

a.c. supply

Volts	24	42	48	110	115	220	230	240	380	400	415	440	500
LC2D09…D150 (D115 and D150 coils with built-in suppression device as standard)													
50/60 Hz	B7	D7	E7	F7	FE7	M7	P7	U7	Q7	V7	N7	R7	S7
LC2D80…D115													
50 Hz	B5	D5	E5	F5	FE5	M5	P5	U5	Q5	V5	N5	R5	S5
60 Hz	B6	–	E6	F6	–	M6	–	U6	Q6	–	–	R6	–

d.c.supply

Volts	12	24	36	48	60	72	110	125	220	250	440
LC2D09…D38 (coils with integral suppression device fitted as standard, by bi-directional peak limiting diode)											
U 0.7…1.25 Uc	JD	BD	CD	ED	ND	SD	FD	GD	MD	UD	RD
LC2D40A…D65A (coils with integral suppression device fitted as standard, by bi-directional peak limiting diode)											
U 0.75…1.25 Uc	JD	BD	CD	ED	ND	SD	FD	GD	MD	UD	RD

Low consumption

Volts ⎓	5	12	20	24	48	110	220	250
LC2D09...D38 (coils with integral suppression device fitted as standard, by bi-directional peak limiting diode)								
U 0.8…1.25 Uc	AL	JL	ZL	BL	EL	FL	ML	UL

For other voltages between 5 and 690 V, see pages B8/48 to B8/51.
(1) Please check the availability of your variant in the index page B8/59. The SEARCH function of your viewer can be used.
*(2) LC2D09 to D65A: clip-on mounting on 35 mm ⊥⊥ rail **NSYSDR** or screw fixing.*
*LC2D80 and D95: clip-on mounting on 35 mm ⊥⊥ rail **NSYSDR** or 75 mm ⊥⊥ rail **AM1DL** or screw fixing.*
*LC2D115 and D150: clip-on mounting on 35 mm ⊥⊥ rail **NSYSDR** or screw fixing.*
*(3) The weights indicated are for contactors with a.c. control circuit. For d.c. or low consumption control circuit, add 0.330 kg for **LC2D09** to **D38**, 0.150 kg for **LC1D40A** to **D65A**.*
*(4) For reversing contactors with electrical interlocking pre-wired at the factory, add suffix **V** to the references selected above. Example: **LC2D09B7** becomes **LC2D09B7V**.*

***Note:** when assembling a reversing contactor, it is good practice to incorporate a 50 ms time delay.*

Characteristics: pages B8/84 to B8/91
Dimensions: pages B8/108 to B8/109
Schemes: pages B8/110 and B8/111
Click **HERE** for access to online contactor selector

PB121718.tif

LC2D123●●

3-pole reversing contactors - Motors up to 15 kW / 400 V in category AC-3/AC-3e

Pre-wired power connections.
Mechanical interlock without electrical interlocking.

Standard power ratings of 3-phase motors 50-60 Hz in category AC-3/AC-3e (θ ≤ 60 °C)						Rated operational current in AC-3/AC-3e 440 V up to	Instantaneous auxiliary contacts per contactor		Contactors supplied with coil Basic reference, to be completed by adding the voltage code [1]	Weight [3]
220 V 230 V	380 V 400 V	415 V	440 V	500 V	660 V 690 V				Fixing [2]	
kW	kW	kW	kW	kW	kW	A				kg
For connection by spring terminals										
2.2	4	4	4	5.5	5.5	9	1	1	**LC2D093●●**	0.687
3	5.5	5.5	5.5	7.5	7.5	12	1	1	**LC2D123●●**	0.697
4	7.5	9	9	10	10	18	1	1	**LC2D183●●**	0.707
5.5	11	11	11	15	15	25	1	1	**LC2D253●●**	0.787
7.5	15	15	15	18.5	18.5	32 [4]	1	1	**LC2D323●●**	0.797
Power connection by EverLink®, BTR screw connectors [5] and control by spring terminals										
11	18.5	22	22	22	30	40	1	1	**LC2D40A3●●**	1.870
15	22	25	30	30	33	50	1	1	**LC2D50A3●●**	1.880
18.5	30	37	37	37	37	65	1	1	**LC2D65A3●●**	1.890
For connection by Faston connectors										

All power connections are to be made by the customer.
These contactors are fitted with Faston connectors: 2 x 6.35 mm on the power poles and 1 x 6.35 mm on the coil terminals.
For reversing contactors LC2D09 and LC2D12 only, in the references selected above, replace the figure **3** before the voltage code with a figure **9**.
Example: **LC2D093●●** becomes **LC2D099●●**.

Component parts

Auxiliary contact blocks and add-on modules: see pages B8/37 to B8/45.

Standard control circuit voltages (for other voltages, please consult your Regional Sales Office)

a.c. supply													
Volts	**24**	**42**	**48**	**110**	**115**	**220**	**230**	**240**	**380**	**400**	**415**	**440**	**500**
LC2D09…D65A													
50/60 Hz	B7	D7	E7	F7	FE7	M7	P7	U7	Q7	V7	N7	R7	S7
d.c. supply													
Volts	**12**	**24**	**36**	**48**	**60**	**72**	**110**	**125**	**220**	**250**	**440**		
LC2D09…D32 (coils with integral suppression device fitted as standard, by bi-directional peak limiting diode)													
U 0.7…1.25 Uc	JD	BD	CD	ED	ND	SD	FD	GD	MD	UD	RD		
LC2D40A …D65A (coils with integral suppression device fitted as standard, by bi-directional peak limiting diode)													
U 0.75…1.25 Uc	JD	BD	CD	ED	ND	SD	FD	GD	MD	UD	RD		
Low consumption													
Volts ⎓	**5**	**12**	**20**	**24**	**48**	**110**	**220**	**250**					
LC2D09...D32 (coils with integral suppression device fitted as standard, by bi-directional peak limiting diode)													
U 0.8…1.25 Uc	AL	JL	ZL	BL	EL	FL	ML	UL					

For other voltages between 5 and 690 V, see pages B8/48 to B8/51.
(1) Please check the availability of your variant in the index page B8/59. The SEARCH function of your viewer can be used.
*(2) LC2D09 to D32: clip-on mounting on 35 mm ⊔ rail **NSYSDR** or screw fixing.*
*(3) The weights indicated are for reversing contactors with a.c. control circuit. For d.c. or low consumption control circuit, add 0.330 kg for **LC2D09** to **D38**, 0.150 kg for **LC1D40A** to **D65A**.*
*(4) Must be wired with 2 x 4 mm² cables in parallel on the upstream side. On the downstream side, outgoing terminal block **LAD331** may be used (Quickfit technology, see page B1/18).When wired with a single cable, the product is limited to 25 A (11 kW/400 V motors).*
*(5) BTR screws: hexagon socket head. In accordance with local electrical wiring regulations, a size 4 insulated Allen key must be used (reference **LADALLEN4**, see page B8/45).*

Characteristics: pages B8/84 to B8/91
Dimensions: pages B8/108 to B8/109
Schemes: pages B8/110 and B8/111
Click **HERE** for access to online contactor selector

PB121719.eps

LC2DT20●●

PB123820.eps

LC2D115004●●

4-pole changeover contactor pairs - 20 to 200 A in category AC-1

Pre-assembled. Pre-wired power connections
LC2DT20 to LC2DT40: mechanical interlock without electrical interlocking.
LC2D80004: order separately 2 auxiliary contact blocks LADN●1 to obtain electrical interlocking between the 2 contactors (see page B8/37).
For electrical interlocking incorporated in the mechanical interlock, please consult your Regional Sales Office.
LC2D115004: mechanical interlock with integral, pre-wired electrical interlocking.

Utilisation category AC-1 Non-inductive loads Maximum rated operational current (θ ≤ 60 °C)	Instantaneous auxiliary contacts per contactor		Contactors supplied with coil: Basic reference, to be completed by adding the voltage code (1) (2) / Fixing (3)	Weight
For connection by screw clamp terminals or connectors				
A				kg
20	1	1	**LC2DT20●●**	0.730
25	1	1	**LC2DT25●●**	0.730
32	1	1	**LC2DT32●●**	0.850
40	1	1	**LC2DT40●●**	0.850
125	–	–	**LC2D80004●●**	3.200
200	–	–	**LC2D115004●●**	7.400
For connection by lugs or bars				
20	1	1	**LC2DT206●●**	0.730
25	1	1	**LC2DT256●●**	0.730
32	1	1	**LC2DT326●●**	0.850
40	1	1	**LC2DT406●●**	0.850

For customer assembly

For connection by screw clamp terminals or connectors				
60	1	1	**LC1DT60A●●** (4)	–
80	1	1	**LC1DT80A●●** (4)	–
For connection by lugs or bars				
60	1	1	**LC1DT60A6●●** (4)	–
80	1	1	**LC1DT80A6●●** (4)	–

Auxiliary contact blocks and add-on modules: see pages B8/37 to B8/45.

Note: when assembling changeover contactor pairs, it is good practice to incorporate a 50 ms time delay.
(1) See note (2) on next page.
(2) Please check the availability of your variant in the index page B8/59. The SEARCH function of your viewer can be used.
*(3) **LC2DT20** to **LC2DT80**: clip-on mounting on 35 mm ⊔ rail **NSYSDR** or screw fixing.*
*__LC2D80:__ clip-on mounting on 35 mm ⊔ rail **NSYSDR** or 75 mm ⊔ rail **AM1DL** or screw fixing.*
*__LC2D115__: clip-on mounting on 2 x 35 mm ⊔ rails **NSYSDR** or screw fixing.*
*(4) For these operational currents, order 2 identical contactors and a mechanical interlock **LAD4CM** (see page B8/46).*

Contactors

Characteristics: pages B8/84 to B8/91
Dimensions: pages B8/108 to B8/109
Schemes: pages B8/110 and B8/111
Click HERE for access to online contactor selector

Example of necessary components for customer assembly:
2 x LC1DT80A3●● contactors + LAD4CM mechanical interlock

4-pole changeover contactor pairs for 20 to 80 A control in category AC-1

Pre-assembled, for customer assembly

Pre-wired power connections, for connection by spring terminals.

Utilisation category AC-1 Non-inductive loads Maximum rated operational current (θ ≤ 60 °C)	Instantaneous auxiliary contacts per contactor		Contactors supplied with coil: Basic reference, to be completed by adding the control voltage code [1] / Fixing [2]
A			
20	1	1	**LC2DT203●●**
Power connection by EverLink®, BTR screw connectors [3] and control by spring terminals			
60	1	1	**LC1DT60A3●●** [4]
80	1	1	**LC1DT80A3●●** [4]

Separate components

Auxiliary contact blocks and add-on modules: see pages B8/19 to B8/19.

Standard control circuit voltages
(for other voltages, please consult your Regional Sales Office)

a.c. supply

Volts	24	42	48	110	115	220	230	240	380	400	415	440	500
LC2DT20…DT40, LC2DT60A…DT80A													
50/60 Hz	B7	D7	E7	F7	FE7	M7	P7	U7	Q7	V7	N7	R7	–
LC2D80004…D115004													
50 Hz	B5	D5	E5	F5	FE5	M5	P5	U5	Q5	V5	N5	R5	S5
60 Hz	B6	–	E6	F6	–	M6	–	U6	Q6	–	–	R6	–

d.c. supply

Volts	12	24	36	48	60	72	110	125	220	250	440
LC2DT20…DT40, LC1DT60…DT80 (coils with integral suppression device fitted as standard, by bi-directional peak limiting diode)											
U 0.7…1.25 Uc	JD	BD	CD	ED	ND	SD	FD	GD	MD	UD	RD

Low consumption

Volts ⎓	5	12	20	24	48	110	220	250
LC2DT20...DT40 (coils with integral suppression device fitted as standard, by bi-directional peak limiting diode)								
U 0.8…1.25 Uc	AL	JL	ZL	BL	EL	FL	ML	UL

For other voltages between 5 and 690 V, see pages B8/19 to B8/19.
(1) Please check the availability of your variant in the index page B8/59. The SEARCH function of your viewer can be used.
*(2) Clip-on mounting on 35 mm ⊔ rail **NSYSDR** or screw fixing.*
*(3) BTR screws: hexagon socket head. In accordance with local electrical wiring regulations, a size 4 insulated Allen key must be used (reference **LADALLEN4**, see page B8/19).*
*(4) For these operational currents, order 2 identical contactors and a mechanical interlock **LAD4CM** (see page B8/19).*

Characteristics: pages B8/84 to B8/91
Dimensions: pages B8/108 to B8/109
Schemes: pages B8/110 and B8/111
Click **HERE** for access to online contactor selector

PB121720.tif

LC2D09●●●

PB121721.tif

LC2D40A●●●

Deca Advanced contactors have a dark grey casing and a 3-character code voltage.

3-pole reversing contactors - Motors up to 37 kW / 400 V in category AC-3/AC-3e

Pre-wired power connections

Standard power ratings of 3-phase motors 50-60 Hz in category AC-3/AC-3e (θ ≤ 60 °C)						Rated operational current in AC-3/AC-3e 440 V up to	Instantaneous auxiliary contacts per contactor		Contactors supplied with coil Partial reference, to be completed by adding the control voltage code [1]	Weight
220 V 230 V	380 V 400 V	415 V	440 V	500 V	660 V 690 V				Fixing [2]	
kW	kW	kW	kW	kW	kW	A				kg
With mechanical interlock, without electrical interlocking, for connection by screw clamp terminals or Everlink BTR screw connectors [3] [4]										
2.2	4	4	4	5.5	5.5	9	1	1	**LC2D09●●●**	0.783
3	5.5	5.5	5.5	7.5	7.5	12	1	1	**LC2D12●●●**	0.793
4	7.5	9	9	10	10	18	1	1	**LC2D18●●●**	0.803
5.5	11	11	11	15	15	25	1	1	**LC2D25●●●**	0.913
7.5	15	15	15	18.5	18.5	32	1	1	**LC2D32●●●**	0.923
9	18.5	18.5	18.5	18.5	18.5	38	1	1	**LC2D38●●●**	0.933
11	18.5	22	22	22	30	40	1	1	**LC2D40A●●●** [3]	2.154
15	22	25	30	30	33	50	1	1	**LC2D50A●●●** [3]	2.164
18.5	30	37	37	37	37	65	1	1	**LC2D65A●●●** [3]	2.174
22	37	37	37	37	37	66	1	1	**LC2D80A●●●** [3]	2.174

Auxiliary contact blocks and add-on modules

See pages B8/37 to B8/45.

Coil voltage codes

AC/DC 24 V DC supply

Volts	24 (DC only)	24-60	48-130	100-250
LC2D09...D32, LC2D40A ... D80A				
U 0.85...1.1 Uc		BNE	EHE	KUE
LC2D09...D38				
U 0.8...1.2 Uc	BNE			
LC2D40A ...D80A				
U 0.8...1.2 Uc	BBE			

(1) Please check the availability of your variant in the index page B8/59. The SEARCH function of your viewer can be used.
*(2) **LC2D09** to **D80A**: clip-on mounting on 35 mm ⊥⊥ rail **NSYSDR** or screw fixing.*
*(3) BTR screws: hexagon socket head. In accordance with local electrical wiring regulations, a size 4 insulated Allen key must be used (reference **LADALLEN4**, see page B8/45).*
(4) Electrical interlocking is recommended when 2 orders (direct and reverse) could appeared in the same time.

PB121722.eps

LC1DGK●●, LC1DLK●●, LC1DMK●●

PB123777.eps

LC1DWK12●●

Contactors for switching 3-phase capacitor banks (power factor correction)

Special contactors **LC1D●K** are designed for switching 3-phase, single or multiple-step capacitor banks (up to 6 steps). Over 6 steps, it is recommanded to use chokes in order to limit the inrush current and thus improve the lifetime of the installation. The contactors are conform to standards IEC 60070 and 60831, UL and CSA.

Contactor applications

Specification

Contactors fitted with a block of early make poles and damping resistors, limiting the value of the current on closing to 60 In max.
This current limitation increases the life of all the components of the installation, in particular that of the fuses and capacitors.

Operating conditions

Short-circuit protection must be provided by gI type fuses rated at 1.7…2 In.
It will ensure the service continuity of the whole installation in case of a capacitor contactor end of life.

Maximum operational power

The power values given in the selection table below are for the following operating conditions:

Prospective peak current at switch-on	LC1D●K		200 In
Maximum operating rate	LC1DFK, DGK, DLK, DMK		240 operating cycles/hour
	LC1DPK, DTK, DWK		100 operating cycles/hour
Electrical durability at nominal load	All contactor ratings	400 V	300 000 operating cycles
		690 V	200 000 operating cycles

Operational power at 50/60 Hz [1] θ ≤ 60 °C [2]				Instantaneous auxiliary contacts		Tightening torque on cable end	Basic reference, to be completed by adding the voltage code [3] [4]	Weight
230 V	400 V 415 V	440 V	690 V					
kVAR	kVAR	kVAR	kVAR	N/O	N/C	N.m		kg
7	12.5	12.5	21	1	2	1.7	**LC1DFK●●**	0.430
9.5	16.7	16.7	28.5	1	2	2.5	**LC1DGK●●**	0.450
11	20	21	33	1	2	2.5	**LC1DLK●●**	0.600
14	25	27	42	1	2	2.5	**LC1DMK●●**	0.630
17	30	32	50	1	2	5	**LC1DPK●●**	1.300
22	40	43	67	1	2	5	**LC1DTK●●**	1.300
35	63	67	104	1	2	12	**LC1DWK12●●**	1.650

Switching of multiple-step capacitor banks (with equal or different power ratings)

The correct contactor for each step is selected from the above table, according to the power rating of the step to be switched.
Example: 50 kVAR 3-step capacitor bank. Temperature: 50 °C and U = 400 V or 440 V.
One 25 kVAR step: contactor LC1DMK, one 15 kVAR step: contactor LC1DGK, and one 10 kVAR step: contactor LC1DFK.

(1) Operational power of the contactor according to the scheme on the page opposite.
(2) The average temperature over a 24-hour period, in accordance with standards IEC 60070 and 60831 is 45 °C.
(3) Standard control circuit voltages (the delivery time is variable, please consult your Regional Sales Office):

Volts	24	48	110	120	220	230	240	380	400	415	440
50/60 Hz	B7	E7	F7	G7 [5]	M7	P7	U7	Q7	V7	N7	R7

(4) Please check the availability of your variant in the index page B8/58. The SEARCH function of your viewer can be used.
(5) For PK/TK, G7 can only be used at 60 Hz.

Dimensions, schemes:
page B8/112

Click **HERE** for access to online contactor selector

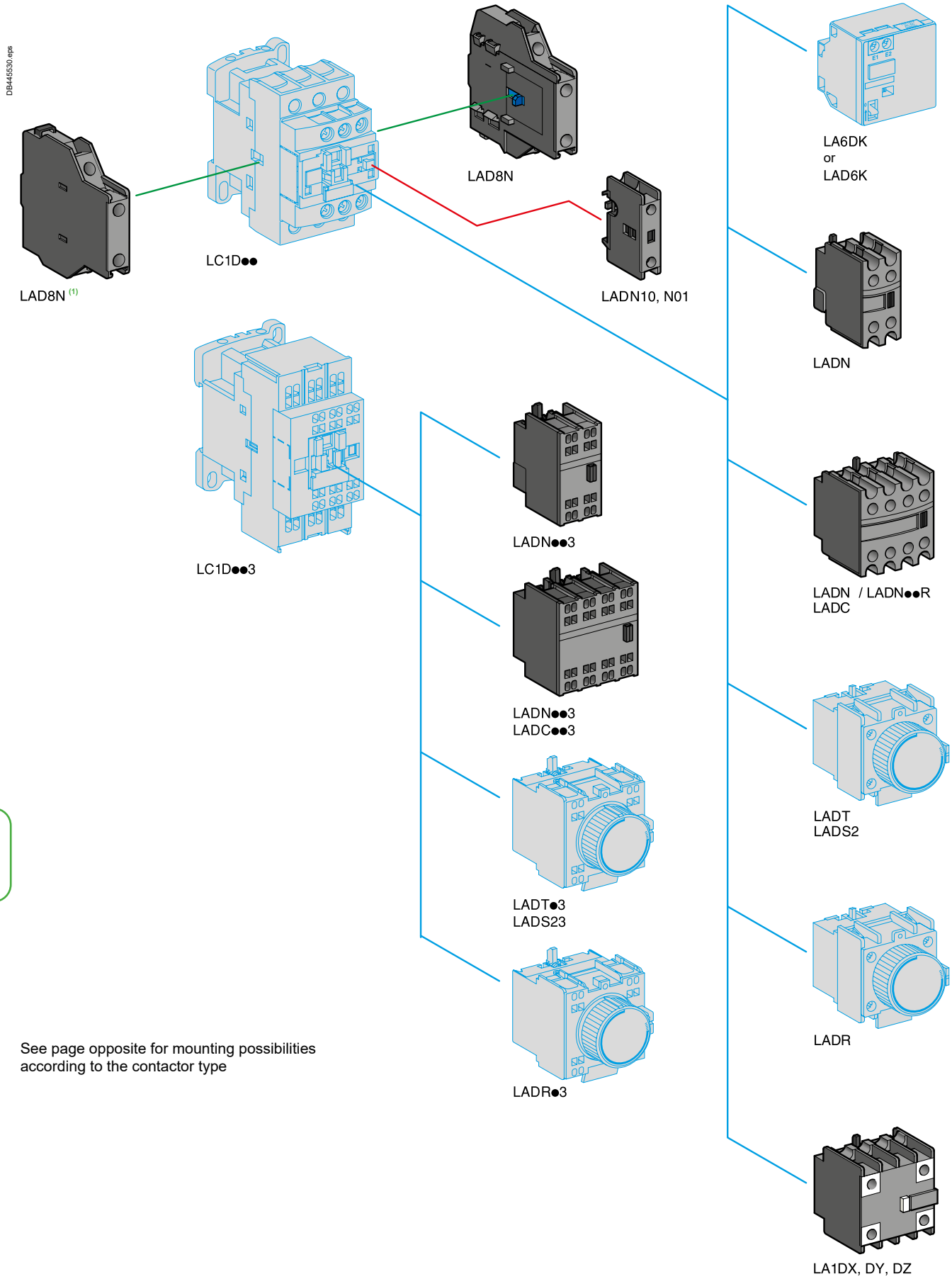

See page opposite for mounting possibilities according to the contactor type

(1) No left side mounting on Deca Advanced contactors.

Life Is On Schneider Electric

PB121689.eps

LADN22

PB123773.eps

LAD8N11

PB123989.eps

LADN22R

PB123821.eps

LA1DX●●, LA1DZ●●

Instantaneous auxiliary contact blocks for connection by screw clamp terminals

For use in normal operating environments

Clip-on mounting	Number of contacts per block	Composition					Reference	
Front	1	–	–	–	1	–	**LADN10**	
		–	–	–	–	1	**LADN01**	
	2	–	–	–	1	1	**LADN11**	
		–	–	–	2	–	**LADN20**	
		–	–	–	–	2	**LADN02**	
	4	–	–	–	2	2	**LADN22**	**LADN22S** (1)
		–	–	–	1	3	**LADN13**	
		–	–	–	4	–	**LADN40**	
		–	–	–	–	4	**LADN04**	
		–	–	–	3	1	**LADN31**	
	4 incl. 1 N/O & 1 N/C make before break	–	–	–	2	2	**LADC22**	
Side (contact blocks compatible with AC coil and AC/DC Deca Advanced contactors)	2	–	–	–	1	1	**LAD8N11**	
		–	–	–	2	–	**LAD8N20**	
		–	–	–	–	2	**LAD8N02**	
For use in harsh industrial environment (6)								
Front	2	–	–	–	1	1	**LADN11R**	
		–	–	–	2	–	**LADN20R**	
	4	–	–	–	2	2	**LADN22R**	
		–	–	–	4	–	**LADN40R**	
		–	–	–	3	1	**LADN31R**	
For terminal referencing conforming to EN 50012								
Front on 3P contactors and 4P contactors 20 to 80 A	2	–	–	–	1	1	**LADN11G**	
	4	–	–	–	2	2	**LADN22G**	
Front on 4P contactors 125 to 200 A	2	–	–	–	1	1	**LADN11P**	
	4	–	–	–	2	2	**LADN22P**	
With dust and damp protected contacts, for use in harsh industrial environment								
Front	2	–	2	–	–	–	**LA1DX20**	
		1	1	–	–	–	**LA1DX11**	
		2	–	–	–	–	**LA1DX02**	
		–	2	2	–	–	**LA1DY20** (2)	
	4	–	2	–	2	–	**LA1DZ40**	
		–	2	–	1	1	**LA1DZ31**	

Instantaneous auxiliary contact blocks for connection by lugs

This type of connection is not possible for blocks with 1 contact or blocks with dust and damp protected contacts. For all other instantaneous auxiliary contact blocks, add the figure **6** to the end of the references selected above. Example: **LADN11** becomes **LADN116**.

Instantaneous auxiliary contact blocks for connection by spring terminals

This type of connection is not possible for LAD8, LADN with 1 contact or blocks with dust and damp protected contacts. For all other contact blocks, add the figure **3** to the end of the references selected above. Example: **LADN11** becomes **LADN113**.

Maximum number of auxiliary contacts that can be fitted:

Contactors			Instantaneous auxiliary contacts						Time delay
Type	Number of poles and size		Side mounted		Front mounted				
					1 contact		2 contacts	4 contacts	1 block
AC AC/DC	3P	LC1D09…D38	1 on LH or 1 on RH side(3)	and	–		1	or 1	or 1
		LC1D40A…D80A	1 on LH or 1 on RH side	and	–		1	or 1	or 1
		LC1D80 and D95 (50/60 Hz)	1 on each side	or	2	and	1	or 1	or 1
		LC1D80 and D95 (50 or 60 Hz)	1 on each side	and	2	and	1	or 1	or 1
		LC1D115 and D150	1 on LH side	and	–		1	or 1	or 1
	4P	LC1DT20…DT40	1 on LH side	and	–		1	or 1	or 1
		LC1DT60A and DT80A	1 on LH or 1 on RH side	and	–		1	or 1	or 1
		LC1D40008, D65008 and D80	1 on each side	or	1	or	1	or 1	or 1
		LC1D115	1 on each side	and	1	or	1	or 1	or 1
DC	3P	LC1D09…D38	–		–		1	or 1	or 1
		LC1D40A…D80A	–		–		1	or 1	or 1
		LC1D80 and D95	–		1	or	1	or 1	or 1
		LC1D115 and D150	1 on LH side	and	–		1	or 1	or 1
	4P	LC1DT20…DT40	–		–		1	or 1	or 1
		LC1DT60A and DT80A	–		–		1	or 1	or 1
		LC1D40008, D65008 and D80	–		2	and	1	or 1	or 1
		LC1D115	1 on each side		–	and	1	or 1	or 1
LC (4) (5)	3P	LC1D09…D38	–		–		1	–	–
	4P	LC1DT20…DT40	–		–		1	–	–

(1) With red front face - for safety chain indication.
(2) Device fitted with 4 earth screen continuity terminals.
(3) 1 on LH side for AC coils - 1 on RH side for AC/DC coils.
(4) LC: low consumption.
(5) LA1D●●● dust & damp proof auxiliary contact blocks not allowed.
(6) Available only with screw clamp terminals and can be used on contactors with standard power consumption.

Characteristics: pages B8/92 and B8/93
Curves: page B8/94
Dimensions: pages B8/99 and B8/100
Schemes: pages B8/106 and B8/107

TeSys Deca auxiliary contact blocks for use in harsh industrial environment

Product references: coding principle

LA	D	N	22	R
Accessory	TeSys Deca		Type: 11: 1NO + 1NC; 20: 2NO; 40: 4NO; 31: 3NO + 1NC; 22: 2NO + 2NC	Reliability PRO

Note: There are differences in NO/NC position between LADN••R and LADN••. Please refer to page B8/106 for wiring diagram details.
This auxiliary module only supports the installation on contactors with standard power consumption.

Product core values

Dustproof, Ultra-fine grain silver contacts, Improved Reliability, 17 V/1 mA

New upgrade, with innovative design

20% stability increased on contacts
Ensure contact reliability between mobile and static contacts

Fully sealed design benefits on reduced dust access
Comprehensive blocking of dust and external pollution

5X granularity refinement on silver alloy
Innovative binary alloy refinement process ensures precise conduction for each operation

10^{-8} level on reliability
Capacity 17 V/1 mA

Target industries and applications

- For elevator, textile machinery and other harsh industrial applications
- For low voltage and low current high sensitive applications

Product variants:

LADN11R

LADN20R

LADN22R

LADN31R

LADN40R

Guideline for product upgrading

Existing products	
LADN•• Standard applications 17 V/5 mA	
Product type	**Product description**
LADN11	Auxiliary module 1NO+1NC, screw terminals
LADN20	Auxiliary module 2NO, screw terminals
LADN22	Auxiliary module 2NO + 2NC, screw terminals
LADN31	Auxiliary module 3NO + 1NC, screw terminals
LADN40	Auxiliary module 4NO, screw terminals

New products	
LADN••R for harsh environment 17 V/1 mA	
Product type	**Product description**
LADN11R	Auxiliary module 1NO +1NC, screw terminals
LADN20R	Auxiliary module 2NO, screw terminals
LADN22R	Auxiliary module 2NO + 2NC, screw terminals
LADN31R	Auxiliary module 3NO + 1NC, screw terminals
LADN40R	Auxiliary module 4NO, screw terminals

Characteristics: pages B8/84 to B8/91
Dimensions: pages B8/103 to B8/104
Schemes: pages B8/110 and B8/111

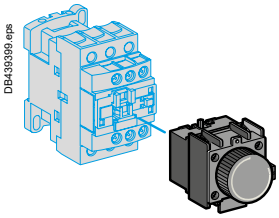

LADT●

Time delay auxiliary contact blocks for connection by screw clamp terminals

Maximum number of auxiliary contact blocks that can be fitted per contactor, see page B8/37.
Sealing cover to be ordered separately, see page B8/45.
LADS2: with switching time of 40 ms ± 15 ms between opening of the N/C contact and closing of the N/O contact.

Clip-on mounting	Number of contacts	Time delay		Reference
		Type	Setting range	
Front	1 N/O + 1 N/C	On-delay	0.3…3 s [5]	**LADT0**
			1…30 s	**LADT2**
			10…180 s	**LADT4**
			1…30 s	**LADS2**
		Off-delay	0.3…3 s [5]	**LADR0**
			1…30 s	**LADR2**
			10…180 s	**LADR4**

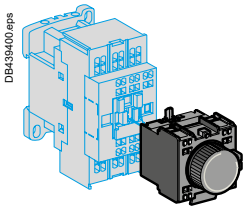

LADT●3

Time delay auxiliary contact blocks for connection by lugs

Add the figure **6** to the end of the references selected above. Example: **LADT0** becomes **LADT06**.

Time delay auxiliary contact blocks for connection by spring terminals

Add the figure **3** to the end of the references selected above. Example: **LADT0** becomes **LADT03.**

Time delay auxiliary contact blocks for connection by Faston connectors

Add the figure **9** to the end of the references selected above. Example: **LADT0** becomes **LADT09**.

Mechanical latch blocks [1]

Clip-on mounting	Unlatching control	For use on contactor	Basic reference, to be completed by adding the control voltage code [2] [3]
Front	Manual or electric	LC1D09…D38 (∿ or ⎓) [4] LC1DT20…DT40 (∿ or ⎓)	**LAD6K10●**
		LC1D40A…D80A (3 P ∿ or ⎓) LC1DT60A and DT80A (4 P ∿ or ⎓)	**LAD6K10●**
		LC1D80…D150 (3 P ∿) LC1D80 and D150 (3 P ⎓) LC1D80 (4 P ∿) LC1D80 and D115 (4 P ∿) LP1D80 and LC1D115 (4 P ⎓)	**LA6DK20●**
		LC1D40 and D65 (4 P ∿) LP1D40 and D65 (4 P ⎓)	**LA6DK10●**

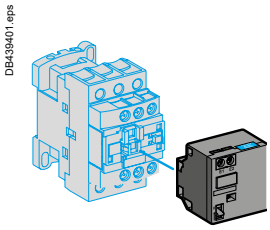

LAD6K10●

(1) The mechanical latch block must not be powered up at the same time as the contactor.
The duration of the control signal for the mechanical latch block and the contactor should be:
⩾ 100 ms for a contactor operating on an a.c. supply,
⩾ 250 ms for a contactor operating on a d.c. supply.
Maximum impulse duration for the mechanical latch block: 10 seconds.
(2) Standard control circuit voltages (for other voltages, please consult your Regional Sales Office):

Volts 50/60 Hz, ⎓	24	32/36	42/48	60/72	100	110/127	220/240	256/277	380/415
Code	B	C	E	EN	K	F	M	U	Q

(3) Please check the availability of your variant in the index page B8/59. The SEARCH function of your viewer can be used.
*(4) The DC, low consumption contactors (coil code ●L) are not compatible with the mechanical latch blocks **LAD6K10●**.*
(5) With extended scale from 0.1 to 6 s.

Characteristics:
pages B8/84 to B8/91
Dimensions:
pages B8/103 to B8/104
Schemes:
pages B8/110 and B8/111

Product references

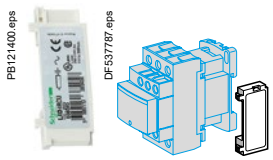

LAD4RCU LAD4●●

RC circuits (Resistor-Capacitor)

Effective protection for circuits highly sensitive to "high frequency" interference. For use only in cases where the voltage is virtually sinusoidal. i.e. less than 5 % total harmonic distortion. Voltage limited to 3 Uc max. and oscillating frequency limited to 400 Hz max. Slight increase in drop-out time (1.2 to 2 times the normal time).

Mounting	For use with contactor [1]			Reference
	Rating	Type		
		V ∿	V ⎓	
Clip-on side mounting [2] [3]	D09…D38 (3P) DT20…DT40	24…48	–	**LAD4RCE**
		50…127	–	**LAD4RCG**
		110…250	–	**LAD4RCU**
Clip-on front mounting [2] [3]	D40A…D80A (3P) DT60A…DT80A (4P)	24…48	–	**LAD4RC3E**
		50…127	–	**LAD4RC3G**
		110…240	–	**LAD4RC3U**
		380…415	–	**LAD4RC3N**
Screw fixing [4]	D80…D150 (3P) D40…D115 (4P)	24…48	–	**LA4DA2E**
		50…127	–	**LA4DA2G**
		110…240	–	**LA4DA2U**
		380…415	–	**LA4DA2N**

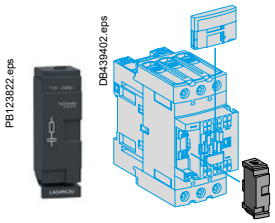

LAD4RC3●, LAD4V3●, LAD4D3U, LAD4T3●

Varistors (peak limiting)

Protection provided by limiting the transient voltage to 2 Uc max. Maximum reduction of transient voltage peaks. Slight increase in drop-out time (1.1 to 1.5 times the normal time).

Clip-on side mounting [2] [3]	D09…D38 (3P) DT20…DT40	24…48	–	**LAD4VE**
		50…127	–	**LAD4VG**
		110…250	–	**LAD4VU**
Clip-on front mounting [2] [3]	D40A…D80A (3P) DT60A…DT80A (4P)	24…48	24…48	**LAD4V3E**
		50…127	50…127	**LAD4V3G**
		110…250	110…250	**LAD4V3U**
Screw fixing [4]	D80…D115 (3P) D80…D115 (4P)	24…48	–	**LA4DE2E**
		50…127	–	**LA4DE2G**
		110…250	–	**LA4DE2U**
	D80…D95 (3P) D80 (4P)	–	24…48	**LA4DE3E**
		–	110…250	**LA4DE3U**

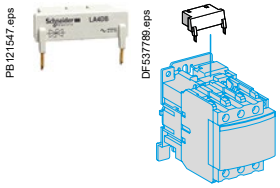

LA4DC3U

Flywheel diodes

No overvoltage or oscillating frequency. Increase in drop-out time (6 to 10 times the normal time).
Polarised component.

Clip-on side mounting [3] [5]	D09…D38 (3P), DT20…DT40	–	5...600	**LAD4DDL**
Clip-on front mounting [3]	D40A…D65A (3P), DT60A…DT80A (4P)	–	24…250	**LAD4D3U**
Screw fixing [4]	D80 and D95 (3P), D40…D80 (4P)	–	24…250	**LA4DC3U**

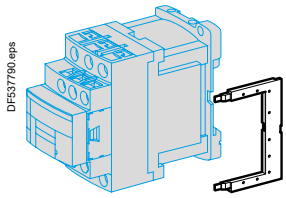

LAD4DDL or LAD4T●DL

Bidirectional peak limiting diodes

Protection provided by limiting the transient voltage to 2 Uc max.
Maximum reduction of transient voltage peaks.

Clip-on side mounting [2]	D09…D38 (3P) DT20…DT40 (4P) [6]	24	–	**LAD4TB**
		–	24	**LAD4TBDL**
		72	–	**LAD4TS**
		–	72	**LAD4TSDL**
		–	125	**LAD4TGDL**
		–	250	**LAD4TUDL**
Clip-on front mounting [2]	D40A…D80A (3P) DT60A…DT80A (4P) [6]	12…24	12…24	**LAD4T3B**
		25…72	25…72	**LAD4T3S**
		73…125	73…125	**LAD4T3G**
		126…250	126…250	**LAD4T3U**
		251…440	251…440	**LAD4T3R**
Screw fixing [4]		–	24	**LA4DB3B**
		–	72	**LA4DB3S**

(1) For satisfactory protection, a suppressor module must be fitted across the coil of each contactor except for Deca Advanced (●●E coil), as surge protection is already embedded.
(2) Clipping-on makes the electrical connection. The overall size of the contactor remains unchanged.
(3) In order to install these accessories, the existing suppression device must first be removed.
(4) Mounting at the top of the contactor on coil terminals A1 and A2.
(5) Not compatible with low consumption contactors.
*(6) From **D09** to **D65A** and from **LC1DT20** to **DT80A**, d.c, low consumption are fitted with a built-in bidirectional peak limiting diode suppressor as standard. This bidirectional peak limiting diode is removable and can therefore be replaced by the user. (See reference above).*

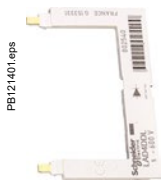

LAD4DDL

Characteristics:
page B8/96

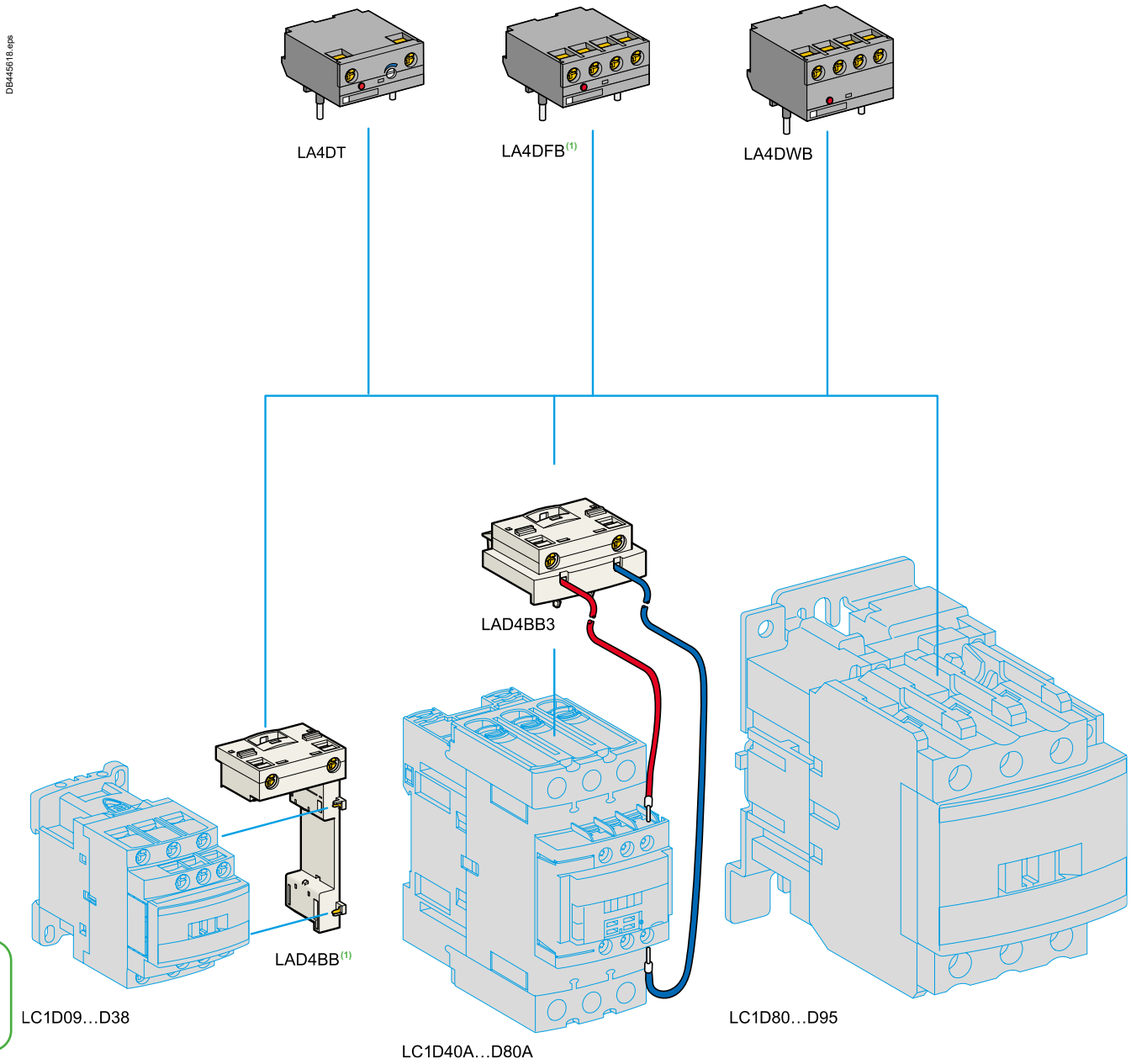

See opposite page for mounting possibilities according to the contactor type.

(1) For Deca contactor with AC coil only.

Product references

PB124005.eps

LA4DT●●

PB124006.eps

LA4DFB

PB121550.eps

LA4DBL

PB121402.eps

LAD4BBVU

Electronic serial timer modules (1)

■ 3-pole contactors LC1D09 to D38: mounted using adapter LAD4BB, to be ordered separately, see below.
■ 3-pole contactors LC1D40A to D65A: mounted using adapter LAD4BB3, to be ordered separately, see below.
■ 3-pole contactors LC1D80 to D150 and 4-pole contactors LC1D40 to D115: mounted directly across terminals A1 and A2 of the contactor.

On-delay type

Operational voltage ∼		Time delay	Reference
24…250 V	**100…250 V**		
LC1D09…D80A (3P)	LC1D80…D150 (3P)	0.1…2 s	**LA4DT0U**
		1.5…30 s	**LA4DT2U**
		25…500 s	**LA4DT4U**

Interface modules

■ 3-pole contactors LC1D09 to D38: mounted using adapter LAD4BB, to be ordered separately, see below.
■ 3-pole contactors LC1D40A to D80A: mounted using adapter LAD4BB3, to be ordered separately, see below.

Relay interface

Operational voltage ∼	Supply voltage E1-E2 (⎓)	Reference
24…250 V		
LC1D09…D150 (3P)	24 V	**LA4DFB**

Static relay interface

Operational voltage ∼		Supply voltage E1-E2 (⎓)	Reference
24…250 V	**100…250 V**		
LC1D09…D80A (3P)	LC1D80…D115 (3P)	24 V	**LA4DWB**

Adapter kit for low control signal

For use on contactors	Composition	Reference
LC1D40A…D80A (3P) (2)	■ 1 LAD4BB3 coil wiring adapter ■ 1 LA4DFB relay interface module	**LA4DBL**

Wiring adapters for coil retrofit of 3 pole contactors

For adapting existing wiring to a new product

For use on contactors			Reference
LC1D09…D38	Without coil suppression		**LAD4BB** (3)
	With coil suppression	∼ 24…48 V	**LAD4BBVE**
		∼ 50…127 V	**LAD4BBVG**
		∼ 110…250 V	**LAD4BBVU**
LC1D40A…80A	Without coil suppression		**LAD4BB3**

(1) For 24 V operation, the contactor must be fitted with a 21 V coil (code Z). See pages B8/48 to B8/51.
(2) The kit is compatible with a coil voltage of ∼ 24 V to ∼ 250 V (B7 to U7) and ⎓ 24 V to ⎓ 250 V (BD to UD).
*(3) **LAD4BB** can not be used with 4 poles contactors.*

Characteristics: page B8/97
Dimensions: page B8/99
Schemes: page B8/107

Product references

PB121360.eps

LA9D3260

PB121363.eps

LA9D11560●

PB121361.eps

LA9D115503

PB121362.eps

LAD96570

PB121364.eps

LA9D11570●

PB121365.eps

LA9D80962

PB121366.eps

LA9D11567

Accessories for main pole and control connections

Description		For use with contactors LC1 ∼	For use with contactors LC1 ⎓	Sold in lots of	Unit reference
Connectors for cable, size (1 connector)	4-pole 4...10 mm²	DT20, DT25	DT20, DT25	1	**LAD92560**
	3-pole 6...25 mm²	D09…D38	D09…D38	1	**LA9D3260**
EverLink® terminal block	3-pole	D40A…D80A	D40A…D80A	1	**LAD96560**
Connectors for cables (2 connectors)	3-pole 120 mm²	D115, D150	D115, D150	1	**LA9D115603**
	4-pole 120 mm²	D115	D115	1	**LA9D115604**
Connectors for lug type terminals (2 connectors)	3-pole	D1156, D1506	D1156, D1506	1	**LA9D115503**
Protective covers for connectors for lug type terminals	3-pole	D40A6…D80A6	D40A6…D80A6	1	**LAD96570**
		D1156, D1506	D1156, D1506	1	**LA9D115703** (1)
	4-pole	D60A6…D80A6	D60A6…D80A6	1	**LAD96580**
		D1156, D1506	D1156, D1506	1	**LA9D115704**
IP 20 covers for lug type terminals (for mounting with circuit breakers GV3 P●●6 and GV3 L●●6)	3 poles	D40A6…D80A6	D40A6…D80A6	1	**LAD96575**
Links for parallel connection of	2 poles	D09…D38	D09…D38	10	**LA9D2561**
		DT32, DT40 (4P)	DT32, DT40 (4P)	10	**LAD96061**
		D40A…D80A	D40A…D80A	1	**LAD9P32**
		D80, D95	D80, D95	2	**LA9D80961**
	3 poles	D09…D38	D09…D38	10	**LAD9P3** (2)
		D40A…D80A	D40A…D80A	1	**LAD9P33**
		D80, D95	D80, D95	1	**LA9D80962**
	4 poles	DT20, DT25	DT20, DT25	2	**LA9D1263**
		D80	D80	2	**LA9D80963**
Staggered coil connection		–	D80	10	**LA9D09966**
Control circuit take-off from main pole		D80, D95	D80, D95	10	**LA9D8067**
		D115, D150	D115, D150	10	**LA9D11567**
Spreaders for increasing the pole pitch to 45 mm		D115, D150	D115, D150	3	**GV7AC03**

(1) For 3-pole contactors: 1 set of 6 covers, for 4-pole contactors: 1 set of 8 covers.
(2) Separate connecting bar for connecting 2 poles in parallel.

Control Panel Technical Guide:
Mounting and wiring accessories for TeSys K, Deca, F contactors. Star-delta, reverser, low-high speed control motor starters and changeover applications - Product references and details on all kits and wiring accessories.

> Ref. Document: CPTG011_EN

> Click on QR code to download

Product references

Sets of contacts and arc chambers

Description	For contactor		Reference
Sets of contacts	3-pole	LC1D115	**LA5D1158031**
		LC1D150	**LA5D150803**
	4-pole	LC1D115004	**LA5D115804**
Arc chambers	3-pole	LC1D115	**LA5D11550**

Power connection accessories

PB121367.eps
GV2G245

PB121368.eps
GV1G09

PB121369.eps
GV3S

Terminal block	For supply to one or more GV2G busbar sets	**GV1G09**
Set of 63 A busbars for parallelling of contactors	2 contactors LC1D09…D18 or D25…D38	**GV2G245**
	4 contactors LC1D09…D18 or D25…D38	**GV2G445**
Set of 115 A busbars for parallelling of contactors	2 contactors LC1D40A…D80A	**GV3G264**
	3 contactors LC1D40A…D80A	**GV3G364** (1)
Set of S-shape busbars	For circuit breakers GV3P●● and GV3L●● (3) and contactors LC1D40A…D65A	**GV3S**

Protection accessories

PB123823.eps
LAD9ET1

PB123804.eps
LAD9ET1S

Description	Use	Sold in lots of	Reference
Sealing cover	For LADT, LADR	1	**LA9D901**
Safety cover preventing access to the moving contact carrier	LC1D09…D80A and DT20…DT80A	1	**LAD9ET1**
	Red cover (for safety chain indication)	1	**LAD9ET1S**
	Red cover (for safety chain indication)	1	**LAD9ET3S**
	LC1D115 and D150	1	**LAD9ET4**
	Red cover (for safety chain indication)	1	**LAD9ET4S**

Marking accessories

PB123824.eps
LAD21...22

PB123825.eps
LAD90

Description	Use	Sold in lots of	Unit reference
Sheet of 64 blank legends, self-adhesive, 8 x 33 mm (2)	Contactors (except 4P) LC1D80…D115, LADN (4 contacts), LA6DK	10	**LAD21**
Sheet of 112 blank legends, self-adhesive, 8 x 12 mm (2)	LADN (2 contacts), LADT, LADR, LRD	10	**LAD22**
Marker holder snap-in, 8 x 22 mm	4-pole contactors, LC1D80...D115, LA6DK	100	**LA9D92**
Marker holder snap-in, 8 x 18 mm	LC1D09...D65A, LC1DT20...DT80A, LADN (4 contacts), LADT, LADR	100	**LAD90**
Bag of 300 blank legends self-adhesive, 7 x 21 mm	On holder LA9D92	1	**LA9D93**

Mounting accessories

PB121374.eps
LAD7X3

Retrofit plate for screw fixing	For replacement of LC1D40 to D80 with LC1D40A to D80A	1	**LAD7X3**
Mounting plate	For replacement of LC1F115 or F150 with LC1D115 or D150	1	**LA9D730**
Size 4 Allen key, insulated, 1000 V	For use on contactors LC1D40A to LC1D150	5	**LADALLEN4**

*(1) With this set of busbars, any one contactor can be supplied directly by its EverLink® double cage power terminal block. The other two contactors are supplied by the busbar set. The 115 A limitation is therefore applied to these two contactors. Example: 1 **LC1D65A** supplied directly + 1 contactor **LC1D65A** and 1 contactor **LC1D50A** supplied via the busbar set = 115 A. This combination is compatible with busbar set **GV3G364**.*
(2) These legends are for sticking onto the safety cover of the contactors or add-on block, if fitted.
*(3) With 73 A current limit for **GV3L73**, **GV3P73**.*

PB121375.eps

LAD9R1

PB121376.eps

LAD9R3

PB121377.eps

LA9D8069

PB123826.eps

LAD91217

PB121378.eps

LAD91218

For 3-pole reversing contactors for motor control

Contactors with screw clamp terminals or connectors. Horizontally mounted, assembled by customer.

Description	For contactors [1] (2 identical contactors)	Reference
Kits for assembly of reversing contactors		
Kit comprising: ■ a mechanical interlock **LAD9V2** with electrical interlocking **LAD9V1** ■ a set of power connections **LAD9V5** (parallel) and **LAD9V6** (reversing).	LC1D09 to D38	**LAD9R1V**
Kit comprising: ■ a mechanical interlock **LAD9V2** without electrical interlocking ■ a set of power connections **LAD9V5** (parallel) and **LAD9V6** (reversing).	LC1D09 to D38	**LAD9R1**
Kit comprising: ■ a mechanical interlock **LAD4CM** ■ a set of power connections **LA9D65A69**.	LC1D40A to D80A	**LAD9R3**
Mechanical interlocks		
Mechanical interlock with integral electrical interlocking	LC1D80 and D95 (∿)	**LA9D4002**
	LC1D80 and D95 (⎓)	**LA9D8002**
	LC1D115 and D150	**LA9D11502**
Mechanical interlock without integral electrical interlocking	LC1D09 to D38	**LAD9V2**
	LC1D40A to D80A	**LAD4CM**
	LC1D80 and D95 (∿)	**LA9D50978**
	LC1D80 and D95 (⎓)	**LA9D80978**
Sets of power connections		
Comprising: ■ a set of parallel bars ■ a set of reverser bars.	LC1D09 to D38 with screw clamp terminals or connectors	**LAD9V5** + **LAD9V6**
	LC1D09…D32 with spring terminal connections	**LAD9V12** + **LAD9V13** [2]
	LC1D40A to D80A	**LA9D65A69**
	LC1D80 and D95 (∿)	**LA9D8069**
	LC1D80 and D95 (⎓)	**LA9D8069**
	LC1D115 and D150	**LA9D11569**

For star-delta starter

Description	For contactors	Reference	Without timer LADS2
Mounting kit comprising: ■ 1 time delay contact block **LADS2** (**LC1D09…D95**), ■ power circuit connections (**LC1D09…D95**), ■ hardware required for fixing the contactors onto the mounting plate (**LC1D80 & D95**).	LC1D09 to D38 [3]	**LAD91217**	**LAD91218**
	LC1D25 to D38 [4]	**LAD93217**	**LAD93218**
	LC1D40A to D80A	**LAD9SD3**	**–**
	LC1D50 to D80 [5]	**LA9D8017**	**–**
	LC1D80 & D95 [6]	**LA9D8018**	**–**
Equipment mounting plates	LC1D09 to D38	**LA9D12974**	
	LC1D40A to D80A	**–**	
	LC1D80	**LA9D80973**	

(1) To order the 2 contactors: see pages B8/24 and B8/30.
(2) To assemble a reversing contactor with spring terminal connections, the following components must be ordered:
*- 1 mechanical interlock **LAD9V2**,*
- 1 upstream power connection kit and 1 downstream power connection kit.
*Upstream power connection kit **LAD9V10**: installed in the Quickfit system with power connection module **LAD341**.*
*(If module **LAD341** is not used, replace **LAD9V10** with **LAD9V12**).*
*Downstream power connection kit **LAD9V11**: installed in the Quickfit system with outgoing terminal block **LAD331**.*
*(If **LAD331** is not used, replace **LAD9V11** with **LAD9V13**).*
(3) For assembly of 3 contactors of the same physical size (depth).
*(4) For assembly of Main + Delta contactors **LC1D25** to **LC1D38** with Star contactor **LC1D09** to **LC1D18.***
(5) For assembly of Main + Delta contactors LC1D80 with Star contactor LC1D50 or D65
(6) For assembly of 3 x LC1D80 or 3 x LC1D95 or with Main + Delta contactors LC1D95 with Star contactor LC1D80.
Note : LA9D8017 is without mechanical interlock and LA9D8018 is with mechanical interlock.

Control Panel Technical Guide:
Mounting and wiring accessories for TeSys K, Deca, F contactors. Star-delta, reverser, low-high speed control motor starters and changeover applications - Product references and details on all kits and wiring accessories.

> Ref. Document: CPTG011_EN

> Click on QR code to download

Dimensions:
pages B8/103 and B8/104

Schemes:
pages B8/106 and B8/107

For 4-pole changeover contactor pairs (3-phase distribution + neutral)

Contactors with screw clamp terminals or connectors. Horizontally mounted, assembled by customer.

PB121379.eps

LADT9R1V

Description	For contactors [1] (2 identical contactors)	Reference
Kits for assembly of changeover contactor pairs		
Kit comprising: ■ a mechanical interlock LAD9V2 with electrical interlocking LAD9V1, ■ a set of power connections (changeover) LAD9V7.	LC1DT20 to DT40 with screw clamps or connectors	**LADT9R1V**
Kit comprising: ■ a mechanical interlock LAD9V2 without electrical interlocking, ■ a set of power connections (changeover) LAD9V7.	LC1DT20 to DT40 with screw clamps or connectors	**LADT9R1**
Mechanical interlocks		
With integral electrical interlocking	LC1D80004	**LA9D4002**
	LP1D80004	**LA9D8002**
	LC1D115004	**LA9D11502**
Without integral electrical interlocking	LC1DT20 to DT40 with screw clamps or connectors	**LAD9V2** [2]
	LC1DT203 to DT403 with spring terminals	**LAD9V2** [2]
	LC1DT60A and DT80A	**LAD4CM**
	LC1D80004	**LA9D50978**
	LP1D80004	**LA9D80978**
Sets of power connections		
Comprising a set of parallel bars	LC1D80004	**LA9D8070**
	LP1D80004	**LA9D8070**
	LC1D115004	**LA9D11570**
	LC1D80004	**LA9D8070** [2]
	LP1D80004	**LA9D8070** [2]

PB121381.eps

LA9D50978

PB121380.eps

LA9D8070

For 3-pole changeover contactor pairs

Contactors with screw clamp terminals or connectors. Horizontally mounted, assembled by customer.

PB121382.eps

LAD9R3S

Description	For contactors [1] (2 identical contactors)	Reference
Kits for assembly of changeover contactor pairs		
Kit comprising: ■ a mechanical interlock LAD4CM ■ a set of parallel bars LA9D65A6	LC1D40A…D80A	**LAD9R3S**
Mechanical interlocks		
Without integral electrical interlocking	LC1D40A…D80A	**LAD4CM**
With integral electrical interlocking	LC1D115 and D150	**LA9D11502**
Sets of power connections		
Comprising a set of parallel bars	LC1D40A…D80A	**LA9D65A6**
	and D150	**LA9D11571**

(1) To order the 2 contactors: see pages B8/24 and B8/30.
*(2) Order 2 contact blocks **LADN●1** to build the electrical interlock, see page B8/37.*

Control Panel Technical Guide:
Mounting and wiring accessories for TeSys K, Deca, F contactors. Star-delta, reverser, low-high speed control motor starters and changeover applications - Product references and details on all kits and wiring accessories.

> Ref. Document: CPTG011_EN

> Click on QR code to download

Dimensions:
pages B8/99 and B8/100

Schemes:
pages B8/110 and B8/111

PB121383.eps

LXD1●●

a.c coils for ∿ contactors LC1D09...D38 and LC1DT20…DT40

Specifications

Average consumption at 20 °C:
- inrush (cos ϕ = 0.75) 70 VA,
- sealed (cos ϕ = 0.3) 50 Hz: 7 VA, 60 Hz: 7.5 VA.

Operating range (θ ≤ 60 °C): 50 Hz: 0.8…1.1 Uc, 60 Hz: 0.85…1.1 Uc.

Control circuit voltage Uc	Average resistance at 20 °C ±10 %	Inductance of closed circuit	Reference (1)
V	Ω	H	
			50/60 Hz
12	1.33	0.05	**LXD1J7**
24	5.37	0.22	**LXD1B7**
32	10.1	0.39	**LXD1C7**
42	17	0.67	**LXD1D7**
48	21.7	0.87	**LXD1E7**
110	124.1	4.6	**LXD1F7**
115	129.8	5	**LXD1FE7**
120	150.6	5.4	**LXD1G7**
200	410.7	15	**LXD1L7**
208	430.4	16	**LXD1LE7**
220	515.4	18	**LXD1M7** (2)
230	538.6	20	**LXD1P7**
240	562.3	22	**LXD1U7**
277	800.7	29	**LXD1W7**
380	1551	55	**LXD1Q7** (3)
400	1633	60	**LXD1V7**
415	1694	65	**LXD1N7**
440	1993	73	**LXD1R7**
480	2398	87	**LXD1T7**
500	2499	95	**LXD1S7**
575	3294	125	**LXD1SC7**
600	3810	136	**LXD1X7**
660	4656	165	**LXD1YC7**
690	5020	180	**LXD1Y7**

(1) The last 2 digits in the reference represent the voltage code.
*(2) Suitable for use on **230 V** / 50 Hz. In this case, apply a coefficient of 0.6 to the mechanical durability of the contactor (see pages B8/82 and B8/84).*
*(3) Suitable for use on **400 V** / 50 Hz. In this case, apply a coefficient of 0.6 to the mechanical durability of the contactor (see pages B8/82 and B8/84).*

PB121384.eps

LXD3●●

a.c coils for ∿ contactors LC1D40A…D80A, LC1DT60A and LC1DT80A

Specifications

Average consumption at 20 °C:
- inrush (cos ϕ = 0.75) 160 VA,
- sealed (cos ϕ = 0.3) 50 Hz: 15 VA, 60 Hz: 15 VA.

Operating range (θ ⩽ 60 °C): 50 Hz: 0.8…1.1 Uc, 60 Hz: 0.85…1.1 Uc.

Control circuit voltage Uc	Average resistance at 20 °C ±10%	Inductance of closed circuit	Reference [1]
V	Ω	H	
			50/60 Hz
24	1.98	0.12	**LXD3B7**
42	6.18	0.37	**LXD3D7**
48	7.97	0.48	**LXD3E7**
110	42.28	2.50	**LXD3F7**
115	48.76	2.74	**LXD3FE7**
120	37.63	2.07	**LXD3G7** [2]
208	105	6.22	**LXD3LE7** [2]
220	182	10	**LXD3M7** [3]
230	192	10.9	**LXD3P7**
240	202	11.9	**LXD3U7**
380	512	29.9	**LXD3Q7** [4]
400	607	33.1	**LXD3V7**
415	635	35.6	**LXD3N7**
440	682	40.1	**LXD3R7**
480	607	33.1	**LXD3T7** [2]
575	1238	68.4	**LXD3SC7**
600	1304	74.5	**LXD3X7**

(1) The last 2 digits in the reference represent the voltage code.
(2) This coil can only be used on 60 Hz.
*(3) Suitable for use on **230 V** / 50 Hz. In this case, apply a coefficient of 0.6 to the mechanical durability of the contactor (see page B8/82 and B8/84).*
*(4) Suitable for use on **400 V** / 50 Hz. In this case, apply a coefficient of 0.6 to the mechanical durability of the contactor (see page B8/82 and B8/84).*

PB121385.eps

LX1D6●●

a.c coils for 3 or 4-pole contactors LC1D40, D50, D65, D80, D95

Specifications

Average consumption at 20 °C:
- inrush (cos ϕ = 0.75) 50 Hz: 200 VA, 60 Hz: 220 VA
- sealed (cos ϕ = 0.3) 50 Hz: 20 VA, 60 Hz: 22 VA.

Operating range (θ ⩽ 55 °C): 0.85…1.1 Uc.

Control circuit voltage Uc	Average resistance at 20°C ±10 %	Inductance of closed circuit	Reference (1)	Average resistance at 20 °C ±10 %	Inductance of closed circuit	Reference (1)
V	Ω	H		Ω	H	
			50 Hz			60 Hz
24	1.4	0.09	**LX1D6B5**	1.05	0.06	**LX1D6B6**
110	31	1.9	**LX1D6F5**	22	1.2	
115	31	1.9	**LX1D6FE5**	–	–	–
208	–	–	**–**	86	4.3	**LX1D6L6**
220	–	–	**–**	98	4.8	**LX1D6M6**
220/230	127	7.5	**LX1D6M5**	–	–	–
240	152	8.7	**LX1D6U5**	120	5.7	**LX1D6U6**
380	–	–	**–**	300	14	**LX1D6Q6**
440	513	30	**LX1D6R5**	392	19	
480	–	–	**–**	480	23	**LX1D6T6**

Specifications

Average consumption at 20 °C:
- inrush (cos ϕ = 0.75) 50/60 Hz: 245 VA at 50 Hz
- sealed (cos ϕ= 0.3) 50/60 Hz: 26 VA at 50 Hz.

Operating range (θ ⩽ 55 °C): 0.85…1.1 Uc.

						50/60 Hz
24	–	–	–	1.22	0.08	**LX1D6B7**
48	–	–	–	5	0.32	**LX1D6E7**
110	–	–	–	26	1.7	**LX1D6F7**
120	–	–	–	32	2	**LX1D6G7**
220/230 (2)	–	–	–	102	6.7	**LX1D6M7**
230	–	–	–	115	7.7	**LX1D6P7**
230/240 (3)	–	–	–	131	8.3	**LX1D6U7**
380/400 (4)	–	–	–	310	20	**LX1D6Q7**
400	–	–	–	349	23	**LX1D6V7**
415	–	–	–	390	24	**LX1D6N7**
440	–	–	–	410	27	**LX1D6R7**

(1) The last 2 digits in the reference represent the voltage code.
*(2) For use on **230 V** / 50 Hz, apply a coefficient of 0.6 to the mechanical durability of the contactor, see page B8/82 and B8/84. This coil can be used on 240 V at 60 Hz.*
(3) This coil can be used on 220/240 V at 50 Hz and on 240 V only at 60 Hz.
*(4) For use on **400 V** / 50 Hz, apply a coefficient of 0.6 to the mechanical durability of the contactor, see page B8/82 and B8/84.*

PB121386.eps

LX1D8●●

a.c coils for 3 or 4-pole contactors LC1D115

Specifications

Average consumption at 20 °C:
- inrush (cos ϕ = 0.8) 50 or 60 Hz: 300 VA
- sealed (cos ϕ = 0.3) 50 or 60 Hz: 22 VA.

Operating range (θ ⩽ 55 °C): 0.85…1.1 Uc.

Control circuit voltage Uc	Average resistance at 20 °C ±10 %	Inductance of closed circuit	Reference (1)	Average resistance at 20 °C ±10 %	Inductance of closed circuit	Reference (1)
V	Ω	H		Ω	H	
			50 Hz			60 Hz
24	–	–	–	0.87	0.07	**LX1D8B6**
32	2.14	0.17	**LX1D8C5**	–	–	–
42	3.91	0.28	**LX1D8D5**	–	–	–
48	–	–	–	3.91	0.28	**LX1D8E6**
127	32.75	2.44	**LX1D8FC5**	–	–	–
208	–	–	–	67.92	5.06	**LX1D8L6**
220	104.77	7.65	**LX1D8M5**	–	–	–
380	338.51	22.26	**LX1D8Q5**	243.07	17.04	**LX1D8Q6**
440	441.56	30.34	**LX1D8R5**	338.51	22.26	**LX1D8R6**
500	566.62	38.12	**LX1D8S5**	–	–	–

a.c coils for 3 or 4-pole contactors LC1D115, LC1D150

Specifications

Average consumption at 20 °C:
- inrush: cos ϕ = 0.9 - 280 to 350 VA
- sealed: cos ϕ = 0.9 - 2 to 18 VA.

Operating range (θ ⩽ 55 °C): 0.8…1.15 Uc.

Coils with integral suppression device fitted as standard, class B.

Control circuit voltage Uc	Average resistance at 20 °C ±10 %	Inductance of closed circuit	Reference (1)	Average resistance at 20 °C ±10 %	Inductance of closed circuit	Reference (1)
V	Ω	H		Ω	H	
						50/60 Hz
24	–	–	–	147	3.03	**LX1D8B7**
32	–	–	–	301	8.28	**LX1D8C7**
48	–	–	–	1061	24.19	**LX1D8E7**
110	–	–	–	4377	109.69	**LX1D8F7**
115	–	–	–	4377	109.69	**LX1D8FE7**
120	–	–	–	4377	109.69	**LX1D8G7**
208	–	–	–	10 895	260.15	**LX1D8LE7**
220	–	–	–	9895	210.72	**LX1D8M7**
230	–	–	–	9895	210.72	**LX1D8P7**
240	–	–	–	9895	210.72	**LX1D8U7**
277	–	–	–	21 988	533.17	**LX1D8UE7**
380	–	–	–	21 011	482.42	**LX1D8Q7**
400	–	–	–	21 011	482.42	**LX1D8V7**
415	–	–	–	21 011	482.42	**LX1D8N7**
440	–	–	–	21 501	507.47	**LX1D8R7**
480	–	–	–	32 249	938.41	**LX1D8T7**

(1) The last 2 digits in the reference represent the voltage code.

PB121387.eps

LX4D7JD

d.c. coils for 3-pole contactors LC1D80 or 4-pole contactors LP1D80

Specifications

Average consumption: 22 W.
Operating range: 0.85…1.1 Uc.

Control circuit voltage Uc	Average resistance at 20 °C ± 10%	Inductance of closed circuit	Reference (1)	Weight
V	Ω	H		kg
12	6.6	0.46	**LX4D7JD**	0.680
24	27	1.89	**LX4D7BD**	0.680

(1) The last 2 digits in the reference represent the voltage code.

Life Is On Schneider Electric

LX4D8●D

d.c. coils for contactors LC1D115, D150

Specifications

Consumption: inrush 270 to 365 W, sealed 2.4 to 5.1 W.
Operating range: 0.75…1.2 Uc.
Coils with integral suppression device fitted as standard, class B.

Control circuit voltage Uc	Average resistance at 20 °C ± 10 %	Inductance of closed circuit	Reference [1]	Weight
V	Ω	H		kg
24	147	3.03	**LX4D8BD**	0.300
60	1673	38.44	**LX4D8ND**	0.300
220	9895	210.72	**LX4D8MD**	0.300
250	18 022	345.40	**LX4D8UD**	0.300

(1) The last 2 digits in the reference represent the voltage code.

Product references

PB113075_12.eps

GC2520M5

PB113078_18.eps

GC4040M5

PB113079_24.eps

GC10020M5

Modular Contactors - 17.5 mm pitch for modular panels

No. of poles		Number of 17.5 mm modules	Commercial reference 50 Hz coil - different voltages					Sold in lots of
			12 V	24 V	48 V	110 V	220/240 V	
Maximum current rating category AC-7a - 16 A								
1	–	1	–	–	–	–	**GC1610M5** ★	12
1	1	1	–	–	–	–	**GC1611M5** ★	12
2	–	1	–	**GC1620B5**	–	**GC1620F5** ★	**GC1620M5** ★	12
2	2	2	–	–	–	–	**GC1622M5**	6
3	–	2	–	–	–	–	**GC1630M5** ★	6
4	–	2	–	–	–	–	**GC1640M5** ★	6
Maximum current rating category AC-7a - 25 A								
–	2	1	–	**GC2502B5**	–	–	**GC2502M5** ★	12
–	4	2	–	–	–	–	**GC2504M5** ★	6
1	–	1	–	–	–	–	**GC2510M5** ★	12
1	1	1	–	–	–	–	**GC2511M5** ★	12
2	–	1	–	**GC2520B5**	–	–	**GC2520M5** ★	12
2	2	2	–	–	–	–	**GC2522M5** ★	6
3	–	2	–	–	–	–	**GC2530M5** ★	6
4	–	2	–	–	–	–	**GC2540M5** ★	6
Maximum current rating category AC-7a - 40 A								
–	2	2	–	–	–	–	**GC4002M5** ★	6
–	4	3	–	–	–	–	**GC4004M5**	4
2	–	2	–	–	–	–	**GC4020M5** ★	6
2	2	3	–	–	–	–	**GC4022M5**	4
3	–	3	–	–	–	–	**GC4030M5** ★	4
4	–	3	–	–	–	–	**GC4040M5** ★	4
Maximum current rating category AC-7a - 63 A								
2	–	2	–	–	–	–	**GC6320M5**	6
3	–	3	–	–	–	–	**GC6330M5** ★	4
4	–	3		–	–	–	**GC6340M5** ★	4
Maximum current rating category AC-7a - 100 A								
2	–	3	–	–	–	–	**GC10020M5**	4
4	–	6	–	–	–	–	**GC10040M5** ★	2

★ *for 60 Hz coil replace last figure 5 by 6.*

Characteristics:
pages B8/113 to B8/119

Dimensions:
pages B8/120 to B8/121

Schemes:
page B8/122

Life Is On Schneider Electric

Product references

PB113083_13.eps

GY2520M5

PB113087_26.eps

GY6340M5

Modular "dual tariff" contactors - 17.5 mm pitch for modular panels

No. of poles		Number of 17.5 mm modules	Commercial reference 50 Hz coil - different voltages					Sold in lots of
			12 V	24 V	48 V	110 V	220/240 V	
Maximum current rating category AC-7a - 16 A								
2	–	1	–	**GY1620B5**		–	–	12
Maximum current rating category AC-7a - 25 A								
2	–	1	–	–	–	–	**GY2520M5** ★	12
4	–	2	–	–	–	–	**GY2540M5**	6
Maximum current rating category AC-7a - 40 A								
2	–	2	–	–	–	–	**GY4020M5**	6
4	–	3	–	–	–	–	**GY4040M5**	4
Maximum current rating category AC-7a - 63 A								
2	–	2	–	–	–	–	**GY6320M5**	6
4	–	3	–	–	–	–	**GY6340M5**	4

★ *for 60 Hz coil replace last figure 5 by 6.*

Characteristics:
pages B8/123 to B8/125

Dimensions:
pages B8/126 and B8/127

Schemes:
page B8/127

Product references

PB123996.eps

GF1620U7

Modular impulse relays - 17.5 mm pitch for modular panels

Maximum current rating category AC-1	Composition		Coil voltages ∼ 50/60 Hz	Coil voltages ⎓	Sold in lots of	Unit reference
A			V	V		
16	2	–	230/240	110	12	**GF1620U7**
	1	1	24	12	12	**GF1611B7**
			220	–	12	**GF1611M7**
			230/240	110	12	**GF1611U7**

Characteristics:
pages B8/128 to B8/131

Dimensions, schemes:
page B8/132

Life Is On Schneider Electric

Product references

PB113093_13.eps

GAP23

Instantaneous auxiliary contact blocks

Number of contacts	Number of poles			Reference
2	1	1	–	**GAC0521**
	–	2	–	**GAC0531**
	–	–	1	**GAC0511**

PB104483-40.eps

GAC5

PB104486_34.eps

A9A15922

PB104487_49.eps

A9A15923

Accessories

Description	For use on contactor	Number of modules	Operational voltage in V	Sold in lots of	Unit reference
Coil suppression blocks comprising 2 RC circuits	–	1	12…48	1	**GAP21**
			110…240	1	**GAP23**
Ventilation 1/2 module clips onto ⊥ rail	–	1/2	–	10	**GAC5**
Set of screw shields (10 top parts + 10 bottom parts)	40 or 63 A 2 contacts	2	–	1	**A9A15922**
	40 or 63 A 3 or 4 contacts	3	–	1	**A9A15923**

Dimensions, schemes:
page B8/121

Schemes:
page B8/122

Product references

DPE09P7	GF1611M7	LA4DB3B	LA9D4002	LAD6K10E	LADC226
DPE12P7	GF1611U7	LA4DB3S	LA9D40961	LAD6K10F	LADN01
DPE1801P7	GF1620B7	LA4DBL	LA9D40963	LAD6K10J	LADN02
DPE18P7	GF1620F7	LA4DC1U	LA9D5017	LAD6K10K	LADN023
DPE2501P7	GF1620U7	LA4DC3U	LA9D50978	LAD6K10M	LADN026
DPE25P7	GS2AH4120F	LA4DE1E	LA9D511	LAD7X3	LADN04
DPE32B7	GV1G09	LA4DE1G	LA9D6567	LAD8N02	LADN043
DPE32P7	GV2G05	LA4DE1U	LA9D6569	LAD8N026	LADN046
GAC0511	GV2G245	LA4DE2E	LA9D65A6	LAD8N11	LADN10
GAC0521	GV2G254	LA4DE2G	LA9D65A69	LAD8N116	LADN11
GAC0531	GV2G272	LA4DE2U	LA9D730	LAD8N11G	LADN11R
GAC5	GV2G345	LA4DE3E	LA9D8002	LAD8N20	LADN113
GAP21	GV2G354	LA4DE3U	LA9D8017	LAD8N206	LADN113G
GAP23	GV2G445	LA4DFB	LA9D8018	LAD90	LADN113P
GC10020M5	GV2G454	LA4DT0U	LA9D8067	LAD901	LADN116
GC10040M5	GV2G472	LA4DT2U	LA9D8069	LAD9011	LADN11G
GC1610M5	GV2G554	LA4DT4U	LA9D80691	LAD903	LADN11P
GC1611B5	GV3G264	LA4DWB	LA9D8070	LAD904	LADN13
GC1611F5	GV3G364	LA4KA1U	LA9D8079	LAD91209	LADN133
GC1611M5	GV3S	LA4KC1B	LA9D80961	LAD91217	LADN136
GC1620B5	GY1620B5	LA4KC1E	LA9D80962	LAD91218	LADN13G
GC1620D7	GY1620M5	LA4KC2B	LA9D80963	LAD912GV	LADN13P
GC1620F5	GY2520M5	LA4KE1B	LA9D80973	LAD92560	LADN20
GC1620M5	GY2520M6	LA4KE1E	LA9D80978	LAD93217	LADN20R
GC1620M6	GY2540M5	LA4KE1FC	LA9D894	LAD93218	LADN203
GC1622F5	GY4020M5	LA4KE1UG	LA9D898	LAD96061	LADN206
GC1622M5	GY4040M5	LA4SKC1U	LA9D90	LAD96560	LADN22
GC1630M5	GY6320M5	LA4SKE1E	LA9D901	LAD96566	LADN22R
GC1640F5	GY6340M5	LA4SKE1U	LA9D92	LAD96570	LADN223
GC1640M5	LA1DX02	LA5D11550	LA9D93	LAD96575	LADN223G
GC2502B5	LA1DX11	LA5D1158031	LA9D99	LAD96580	LADN226
GC2502E5	LA1DX20	LA5D115804	LA9E01	LAD9722	LADN22G
GC2502M5	LA1DY20	LA5D150803	LA9E02	LAD9723	LADN22P
GC2504B5	LA1DZ31	LA6DK10C	LA9K0969	LAD9744	LADN22S
GC2504M5	LA1DZ40	LA6DK10J	LA9K105I	LAD9BB18	LADN31
GC2510B5	LA1KN02	LA6DK10U	LA9K105S	LAD9BB32	LADN31R
GC2510M5	LA1KN023	LA6DK20B	LA9KNS35	LAD9DL3	LADN313
GC2511M5	LA1KN02M	LA6DK20E	LAD21	LAD9ET1	LADN313G
GC2520B5	LA1KN04	LA6DK20F	LAD22	LAD9ET1S	LADN316
GC2520F6	LA1KN043	LA6DK20J	LAD4BB	LAD9ET2	LADN31G
GC2520J5	LA1KN11	LA6DK20M	LAD4BB3	LAD9ET3S	LADN31P
GC2520M5	LA1KN113	LA6DK20Q	LAD4BBVE	LAD9ET4	LADN40
GC2520M6	LA1KN11M	LA7D902	LAD4BBVG	LAD9ET4S	LADN40R
GC2522B5	LA1KN13	LA9D0921	LAD4BBVU	LAD9P3	LADN403
GC2522M5	LA1KN133	LA9D09976	LAD4CM	LAD9P32	LADN403G
GC2530F5	LA1KN20	LA9D09980	LAD4D3U	LAD9P33	LADN406
GC2530M5	LA1KN203	LA9D09981	LAD4DDL	LAD9R1	LADN40G
GC2530M6	LA1KN207	LA9D11502	LAD4RC3E	LAD9R11	LADR0
GC2531M5	LA1KN22	LA9D11517	LAD4RC3G	LAD9R1V	LADR03
GC2540E5	LA1KN223	LA9D115503	LAD4RC3N	LAD9R3	LADR06
GC2540M5	LA1KN22M	LA9D115603	LAD4RC3U	LAD9R3S	LADR2
GC2540M6	LA1KN31	LA9D115604	LAD4RCE	LAD9SD3	LADR23
GC4002M5	LA1KN313	LA9D11567	LAD4RCG	LAD9SD3S	LADR26
GC4004M5	LA1KN316	LA9D11569	LAD4RCU	LAD9V1	LADR4
GC4011M5	LA1KN317	LA9D115691	LAD4T3B	LAD9V10	LADR43
GC4020F5	LA1KN31M	LA9D115692	LAD4T3G	LAD9V11	LADR46
GC4020F6	LA1KN40	LA9D11570	LAD4T3R	LAD9V12	LADS2
GC4020M5	LA1KN403	LA9D115703	LAD4T3S	LAD9V13	LADS23
GC4020M6	LA1KN407	LA9D115704	LAD4T3U	LAD9V14	LADS26
GC4022M5	LA1SK01	LA9D11571	LAD4TB	LAD9V15	LADT0
GC4030M5	LA1SK02	LA9D1263	LAD4TBDL	LAD9V16	LADT03
GC4040M5	LA1SK11	LA9D1269	LAD4TGDL	LAD9V17	LADT06
GC4040M6	LA1SK20	LA9D12974	LAD4TS	LAD9V2	LADT2
GC6302M5	LA2KT2E	LA9D15017	LAD4TSDL	LAD9V5	LADT23
GC6304B5	LA2KT2U	LA9D16906	LAD4TUDL	LAD9V6	LADT26
GC6304M5	LA4DA1E	LA9D1860	LAD4V3E	LAD9VP1	LADT4
GC6320M5	LA4DA1G	LA9D1869	LAD4V3G	LAD9VP2	LADT46
GC6330M5	LA4DA1U	LA9D2561	LAD4V3U	LAD9VP3	LADT9R1
GC6330M6	LA4DA2E	LA9D2569	LAD4VE	LAD9VP4	LADT9R1V
GC6340B5	LA4DA2G	LA9D3260	LAD4VG	LADALLEN4	LAZR90M
GC6340M5	LA4DA2N	LA9D3269	LAD4VU	LADC22	LAZR90Q
GF1611B7	LA4DA2U	LA9D32974	LAD6K10B	LADC223	LAZR91F

This document is current. Click on the product reference to get the most recent availability status (hyperlink to **se.com** product datasheet).
If your product variant is no longer available, please consult your distributor or regional sales office.

Product references

LC1D066BD	LC1D09F7	LC1D1156P7	LC1D128D7	LC1D1506R7	LC1D188U7
LC1D066F7	LC1D09FC7	LC1D1156R7	LC1D128E7	LC1D1506SD	LC1D18B5
LC1D066M7	LC1D09FD	LC1D1156SD	LC1D128ED	LC1D1506U7	LC1D18B7
LC1D06P7	LC1D09FE7	LC1D1156U7	LC1D128EL	LC1D150B7	LC1D18BD
LC1D093B7	LC1D09FL	LC1D115B7	LC1D128F7	LC1D150BD	LC1D18BL
LC1D093BD	LC1D09G7	LC1D115BD	LC1D128FD	LC1D150D7	LC1D18BNE
LC1D093BL	LC1D09GD	LC1D115D7	LC1D128G7	LC1D150E7	LC1D18C7
LC1D093E7	LC1D09JD	LC1D115E5	LC1D128L7	LC1D150ED	LC1D18CD
LC1D093ED	LC1D09JL	LC1D115E7	LC1D128M7	LC1D150F7	LC1D18D5
LC1D093F7	LC1D09K7	LC1D115ED	LC1D128MD	LC1D150FD	LC1D18D7
LC1D093FD	LC1D09KUE	LC1D115F5	LC1D128P7	LC1D150FE7	LC1D18E5
LC1D093FE7	LC1D09L7	LC1D115F6	LC1D128RD	LC1D150G7	LC1D18E7
LC1D093FL	LC1D09LE7	LC1D115F7	LC1D128T7	LC1D150GD	LC1D18ED
LC1D093G7	LC1D09M7	LC1D115FD	LC1D128U7	LC1D150K7	LC1D18EHE
LC1D093GD	LC1D09MD	LC1D115FE7	LC1D129SD	LC1D150LE7	LC1D18EL
LC1D093M7	LC1D09N7	LC1D115G6	LC1D12B5	LC1D150M7	LC1D18F7
LC1D093MD	LC1D09ND	LC1D115G7	LC1D12B7	LC1D150MD	LC1D18FC7
LC1D093N7	LC1D09P5	LC1D115GD	LC1D12BD	LC1D150N7	LC1D18FD
LC1D093ND	LC1D09P7	LC1D115K7	LC1D12BL	LC1D150P7	LC1D18FE7
LC1D093P7	LC1D09Q7	LC1D115L7	LC1D12BNE	LC1D150Q7	LC1D18FL
LC1D093U7	LC1D09R7	LC1D115LE7	LC1D12C7	LC1D150R7	LC1D18G7
LC1D096B7	LC1D09RD	LC1D115M5	LC1D12CD	LC1D150SD	LC1D18GD
LC1D096BD	LC1D09SD	LC1D115M7	LC1D12D5	LC1D150T7	LC1D18J7
LC1D096BL	LC1D09T7	LC1D115MD	LC1D12D7	LC1D150U7	LC1D18JD
LC1D096CD	LC1D09U7	LC1D115N7	LC1D12E5	LC1D150V7	LC1D18JL
LC1D096F7	LC1D09UD	LC1D115P5	LC1D12E7	LC1D17000F7CS003	LC1D18K7
LC1D096FD	LC1D09V7	LC1D115P7	LC1D12ED	LC1D17000M7CS003	LC1D18KUE
LC1D096FL	LC1D09W7	LC1D115Q7	LC1D12EHE	LC1D183B7	LC1D18L7
LC1D096G7	LC1D09X7	LC1D115R7	LC1D12EL	LC1D183BD	LC1D18LE7
LC1D096KD	LC1D09Y7	LC1D115RD	LC1D12F7	LC1D183BL	LC1D18M7
LC1D096L7	LC1D1150046BD	LC1D115S7	LC1D12FD	LC1D183E7	LC1D18MD
LC1D096M7	LC1D1150046F7	LC1D115SD	LC1D12FE7	LC1D183ED	LC1D18ML
LC1D096MD	LC1D1150046M5	LC1D115T6	LC1D12G7	LC1D183F7	LC1D18N7
LC1D096ND	LC1D1150046M7	LC1D115T7	LC1D12GD	LC1D183FE7	LC1D18ND
LC1D096P7	LC1D1150046N5	LC1D115U5	LC1D12JD	LC1D183FL	LC1D18P5
LC1D096Q7	LC1D1150046P7	LC1D115U7	LC1D12JL	LC1D183G7	LC1D18P7
LC1D096R7	LC1D1150046U5	LC1D115V7	LC1D12K7	LC1D183M7	LC1D18Q7
LC1D096SD	LC1D1150046U7	LC1D123B7	LC1D12KUE	LC1D183MD	LC1D18R7
LC1D096SL	LC1D115004B7	LC1D123BD	LC1D12L7	LC1D183P7	LC1D18SC7
LC1D0986FD	LC1D115004BD	LC1D123BL	LC1D12LE7	LC1D183U7	LC1D18SD
LC1D098B7	LC1D115004ED	LC1D123E7	LC1D12M7	LC1D186B7	LC1D18T7
LC1D098BD	LC1D115004F7	LC1D123ED	LC1D12MD	LC1D186BD	LC1D18U7
LC1D098BL	LC1D115004FD	LC1D123F7	LC1D12N7	LC1D186BL	LC1D18V7
LC1D098CD	LC1D115004FE7	LC1D123FD	LC1D12ND	LC1D186BLJP	LC1D253B7
LC1D098E7	LC1D115004G6	LC1D123G7	LC1D12P5	LC1D186E7	LC1D253BD
LC1D098ED	LC1D115004M5	LC1D123M7	LC1D12P7	LC1D186EL	LC1D253BL
LC1D098F7	LC1D115004M7	LC1D123P7	LC1D12Q7	LC1D186F7	LC1D253E7
LC1D098FD	LC1D115004MD	LC1D123V7	LC1D12R7	LC1D186FD	LC1D253F7
LC1D098G7	LC1D115004P5	LC1D126B7	LC1D12RD	LC1D186G7	LC1D253FD
LC1D098JD	LC1D115004P7	LC1D126BD	LC1D12SD	LC1D186K7	LC1D253M7
LC1D098M7	LC1D115004Q5	LC1D126BL	LC1D12T7	LC1D186L7	LC1D253MD
LC1D098MD	LC1D115004RD	LC1D126ED	LC1D12U7	LC1D186M7	LC1D253P7
LC1D098P7	LC1D115004U7	LC1D126F7	LC1D12V7	LC1D186ND	LC1D253R7
LC1D098U7	LC1D115004V7	LC1D126FD	LC1D12X7	LC1D186P7	LC1D253V7
LC1D099F7	LC1D115006F7C	LC1D126FL	LC1D12Y7	LC1D186R7	LC1D256B7
LC1D099G7	LC1D11500F7CS003	LC1D126G7	LC1D12Z7	LC1D186SD	LC1D256BD
LC1D09B5	LC1D11500M7CS003	LC1D126KD	LC1D15000F7CS003	LC1D186SL	LC1D256BL
LC1D09B7	LC1D1156B7	LC1D126L7	LC1D15000M7CS003	LC1D186U7	LC1D256F7
LC1D09BD	LC1D1156BD	LC1D126M7	LC1D1506B7	LC1D1883P7	LC1D256FD
LC1D09BL	LC1D1156E7	LC1D126SD	LC1D1506BD	LC1D188B7	LC1D256G7
LC1D09BNE	LC1D1156F5	LC1D1283V7	LC1D1506E7	LC1D188BD	LC1D256K7
LC1D09C7	LC1D1156F7	LC1D1286FD	LC1D1506F7	LC1D188BL	LC1D256KD
LC1D09CD	LC1D1156FD	LC1D1286G7	LC1D1506FD	LC1D188D7	LC1D256L7
LC1D09D5	LC1D1156FE7	LC1D1286L7	LC1D1506G7	LC1D188E7	LC1D256M7
LC1D09D7	LC1D1156G7	LC1D1286LE7	LC1D1506K7	LC1D188ED	LC1D256P7
LC1D09E5	LC1D1156L7	LC1D1286P7	LC1D1506LE7	LC1D188F7	LC1D256U7
LC1D09E7	LC1D1156LE7	LC1D1286U7	LC1D1506M7	LC1D188FD	LC1D2583P7
LC1D09ED	LC1D1156M5	LC1D128B7	LC1D1506MD	LC1D188G7	LC1D2586BD
LC1D09EE7	LC1D1156M7	LC1D128BD	LC1D1506N7	LC1D188M7	LC1D2586F7
LC1D09EHE	LC1D1156MD	LC1D128BL	LC1D1506P7	LC1D188MD	LC1D2586FD
LC1D09EL	LC1D1156N7	LC1D128CD	LC1D1506Q7	LC1D188P7	LC1D258B7

This document is current. Click on the product reference to get the most recent availability status (hyperlink to **se.com** product datasheet).
If your product variant is no longer available, please consult your distributor or regional sales office.

Product references

LC1D258BD	LC1D326BL	LC1D38BNE	LC1D40ABD	LC1D50AB7	LC1D65A3BD
LC1D258BL	LC1D326F7	LC1D38D5	LC1D40ABNE	LC1D50ABBE	LC1D65A3E7
LC1D258C7	LC1D326FD	LC1D38D7	LC1D40AC7	LC1D50ABD	LC1D65A3F7
LC1D258D7	LC1D326G7	LC1D38E5	LC1D40ACD	LC1D50ABNE	LC1D65A3FD
LC1D258E7	LC1D326GD	LC1D38E7	LC1D40AD5	LC1D50ACD	LC1D65A3FE7
LC1D258ED	LC1D326K7	LC1D38ED	LC1D40AD7	LC1D50AD5	LC1D65A3P7
LC1D258F7	LC1D326KD	LC1D38EHE	LC1D40AE5	LC1D50AD7	LC1D65A6B7
LC1D258FD	LC1D326L7	LC1D38EL	LC1D40AE7	LC1D50AE5	LC1D65A6BBE
LC1D258FE7	LC1D326M7	LC1D38F7	LC1D40AEHE	LC1D50AE7	LC1D65A6BD
LC1D258G7	LC1D326P7	LC1D38FD	LC1D40AF7	LC1D50AEHE	LC1D65A6BNE
LC1D258GD	LC1D326R7	LC1D38FE7	LC1D40AFC7	LC1D50AF7	LC1D65A6ED
LC1D258M7	LC1D32B5	LC1D38FL	LC1D40AFE7	LC1D50AFC7	LC1D65A6EHE
LC1D258MD	LC1D32B7	LC1D38G7	LC1D40AG7	LC1D50AFD	LC1D65A6F7
LC1D258P7	LC1D32BD	LC1D38JD	LC1D40AGD	LC1D50AFE7	LC1D65A6FD
LC1D258SD	LC1D32BL	LC1D38JL	LC1D40AJD	LC1D50AG7	LC1D65A6G7
LC1D258U7	LC1D32BNE	LC1D38KUE	LC1D40AK7	LC1D50AGD	LC1D65A6K7
LC1D258V7	LC1D32C7	LC1D38M7	LC1D40AKUE	LC1D50AJ5	LC1D65A6KUE
LC1D25B5	LC1D32D5	LC1D38MD	LC1D40AL7	LC1D50AJD	LC1D65A6M7
LC1D25B7	LC1D32D7	LC1D38N7	LC1D40ALE7	LC1D50AK7	LC1D65A6MD
LC1D25BD	LC1D32E5	LC1D38P5	LC1D40AM7	LC1D50AKUE	LC1D65A6ND
LC1D25BL	LC1D32E7	LC1D38P7	LC1D40AN7	LC1D50AL7	LC1D65A6P7
LC1D25BNE	LC1D32ED	LC1D38Q7	LC1D40AND	LC1D50ALE7	LC1D65A6R7
LC1D25C7	LC1D32EHE	LC1D38R7	LC1D40AP5	LC1D50AM7	LC1D65A6SD
LC1D25CD	LC1D32EL	LC1D38SD	LC1D40AP7	LC1D50AMD	LC1D65A6U7
LC1D25D5	LC1D32F7	LC1D38U7	LC1D40AQ7	LC1D50AN7	LC1D65A6UD
LC1D25D7	LC1D32FC7	LC1D38V7	LC1D40AR7	LC1D50AND	LC1D65AB5
LC1D25E5	LC1D32FD	LC1D40004E7	LC1D40AS7	LC1D50AP5	LC1D65AB6
LC1D25E7	LC1D32FE7	LC1D40004F7	LC1D40AT7	LC1D50AP7	LC1D65AB7
LC1D25ED	LC1D32FL	LC1D40004G6	LC1D40AU7	LC1D50AQ7	LC1D65ABBE
LC1D25EHE	LC1D32G7	LC1D40004M7	LC1D40AU7C	LC1D50AR7	LC1D65ABD
LC1D25EL	LC1D32GD	LC1D40004P7	LC1D40AV7	LC1D50ASD	LC1D65ABNE
LC1D25F7	LC1D32JD	LC1D40008B7	LC1D40AX7	LC1D50AT7	LC1D65ACD
LC1D25FC7	LC1D32JL	LC1D40008D7	LC1D40B7	LC1D50AU7	LC1D65AD5
LC1D25FD	LC1D32K7	LC1D40008E5	LC1D40BD	LC1D50AU7C	LC1D65AD7
LC1D25FE7	LC1D32KUE	LC1D40008E7	LC1D40D7C	LC1D50AV7	LC1D65AE5
LC1D25FL	LC1D32L7	LC1D40008F7	LC1D40E7	LC1D50AX7	LC1D65AE7
LC1D25G7	LC1D32LE7	LC1D40008G6	LC1D40ED	LC1D50B7	LC1D65AEHE
LC1D25GD	LC1D32M7	LC1D40008G7	LC1D40F7	LC1D50BD	LC1D65AF7
LC1D25JD	LC1D32MD	LC1D40008M5	LC1D40G6	LC1D50E7	LC1D65AFC7
LC1D25JL	LC1D32ML	LC1D40008M7	LC1D40G7M	LC1D50ED	LC1D65AFE7
LC1D25KUE	LC1D32N7	LC1D40008N7	LC1D40L6	LC1D50F7	LC1D65AG7
LC1D25L7	LC1D32ND	LC1D40008P7	LC1D40M7	LC1D50G6	LC1D65AJD
LC1D25LE7	LC1D32P5	LC1D40008U7	LC1D40P7	LC1D50G7	LC1D65AK7
LC1D25M7	LC1D32P7	LC1D406G7	LC1D40P7C	LC1D50L6	LC1D65AKUE
LC1D25MD	LC1D32Q7	LC1D40A3B7	LC1D40T6	LC1D50LE7	LC1D65AL7
LC1D25N7	LC1D32R7	LC1D40A3BD	LC1D40U7	LC1D50M7	LC1D65ALE7
LC1D25ND	LC1D32S7	LC1D40A3E7	LC1D40U7M	LC1D50N7	LC1D65AM7
LC1D25P5	LC1D32SD	LC1D40A3F7	LC1D475E7C	LC1D50P7	LC1D65AN7
LC1D25P7	LC1D32T7	LC1D40A3M7	LC1D506FW	LC1D50P7C	LC1D65AP5
LC1D25Q7	LC1D32U7	LC1D40A3MD	LC1D50A3BD	LC1D50T6	LC1D65AP7
LC1D25R7	LC1D32V7	LC1D40A3ND	LC1D50A3E7	LC1D50U7	LC1D65AQ7
LC1D25S7	LC1D32X7	LC1D40A3P7	LC1D50A3FD	LC1D50U7C	LC1D65AR7
LC1D25SC7	LC1D32Y7	LC1D40A6B7	LC1D50A3JD	LC1D65004F7	LC1D65ASD
LC1D25SD	LC1D383BL	LC1D40A6BBE	LC1D50A3M7	LC1D65004G6	LC1D65AT7
LC1D25T7	LC1D383E7	LC1D40A6BD	LC1D50A3P7	LC1D65004G7	LC1D65AU7
LC1D25U7	LC1D383P7	LC1D40A6BNE	LC1D50A3RD	LC1D65004P7	LC1D65AV7
LC1D25UD	LC1D386B7	LC1D40A6EHE	LC1D50A6B7	LC1D65008B7	LC1D65AX7
LC1D25V7	LC1D386BD	LC1D40A6FD	LC1D50A6BBE	LC1D65008D7	LC1D65B7
LC1D25X7	LC1D386BL	LC1D40A6G7	LC1D50A6BD	LC1D65008E7	LC1D65BD
LC1D323B7	LC1D386CD	LC1D40A6GD	LC1D50A6BNE	LC1D65008F7	LC1D65D7C
LC1D323BD	LC1D386F7	LC1D40A6KUE	LC1D50A6CD	LC1D65008FE7	LC1D65E7
LC1D323BL	LC1D386FD	LC1D40A6LE7	LC1D50A6ED	LC1D65008G6	LC1D65ED
LC1D323ED	LC1D386K7	LC1D40A6M7	LC1D50A6EHE	LC1D65008G7	LC1D65F7
LC1D323F7	LC1D386L7	LC1D40A6P7	LC1D50A6F7	LC1D65008L7	LC1D65FD
LC1D323FE7	LC1D386M7	LC1D40A6T7	LC1D50A6FD	LC1D65008M5	LC1D65G6
LC1D323FL	LC1D386MD	LC1D40A6U7	LC1D50A6KUE	LC1D65008M7	LC1D65L6
LC1D323M7	LC1D386SL	LC1D40A6UD	LC1D50A6M7	LC1D65008P7	LC1D65M7
LC1D323MD	LC1D38B5	LC1D40AB5	LC1D50A6P7	LC1D65008R7	LC1D65N7
LC1D323P7	LC1D38B7	LC1D40AB6	LC1D50A6SD	LC1D65008U7	LC1D65P7
LC1D326B7	LC1D38BD	LC1D40AB7	LC1D50AB5	LC1D65008V7	LC1D65T6
LC1D326BD	LC1D38BL	LC1D40ABBE	LC1D50AB6	LC1D65A3B7	LC1D65U7

This document is current. Click on the product reference to get the most recent availability status (hyperlink to **se.com** product datasheet).
If your product variant is no longer available, please consult your distributor or regional sales office.

Life Is On Schneider Electric

Product references

LC1D800046M7	LC1D80CW	LC1DFKB7	LC1DT25LE7	LC1DT60AEHE	LC1K0601E7
LC1D800046P7	LC1D80D7	LC1DFKF7	LC1DT25M7	LC1DT60AF7	LC1K0601F7
LC1D80004B7	LC1D80E5	LC1DFKM7	LC1DT25MD	LC1DT60AFD	LC1K0601F72
LC1D80004E7	LC1D80E7	LC1DFKP7	LC1DT25P7	LC1DT60AFE7	LC1K0601G7
LC1D80004F5	LC1D80ED	LC1DFKU7	LC1DT25U7	LC1DT60AG7	LC1K0601M7
LC1D80004F7	LC1D80F5	LC1DFKV7	LC1DT323BD	LC1DT60AK7	LC1K0601N7
LC1D80004FE7	LC1D80F7	LC1DGKF7	LC1DT326B7	LC1DT60AKUE	LC1K0601P5
LC1D80004G6	LC1D80FD	LC1DGKM7	LC1DT326BD	LC1DT60AM7	LC1K0601P7
LC1D80004G7	LC1D80FE7	LC1DGKP7	LC1DT326BL	LC1DT60AMD	LC1K0601P72
LC1D80004M5	LC1D80FW	LC1DGKU7	LC1DT326G7	LC1DT60AND	LC1K0601Q7
LC1D80004M7	LC1D80G6	LC1DLKM7	LC1DT326K7	LC1DT60AP7	LC1K0601U7
LC1D80004N5	LC1D80G7	LC1DLKP7	LC1DT326L7	LC1DT60AU7	LC1K06103B7
LC1D80004N7	LC1D80G7M	LC1DLKQ7	LC1DT326M7	LC1DT60AV7	LC1K06103F7
LC1D80004P5	LC1D80GD	LC1DMK11F7C	LC1DT32B7	LC1DT60AW7	LC1K06103FE7
LC1D80004P7	LC1D80K7	LC1DMKB7	LC1DT32BD	LC1DT80A3BD	LC1K06103P7
LC1D80004Q7	LC1D80L6	LC1DMKF7	LC1DT32BL	LC1DT80A3P7	LC1K06103P72
LC1D80004U5	LC1D80L7	LC1DMKG7	LC1DT32E7	LC1DT80A6BBE	LC1K06105B7
LC1D80004U7	LC1D80M5	LC1DMKM7	LC1DT32ED	LC1DT80A6BD	LC1K06105F7
LC1D80004V7	LC1D80M7	LC1DMKN7	LC1DT32F7	LC1DT80A6BNE	LC1K06105M7
LC1D80008D7	LC1D80MD	LC1DMKP7	LC1DT32G7	LC1DT80A6ED	LC1K06105P7
LC1D80008E7	LC1D80MW	LC1DMKU7	LC1DT32M7	LC1DT80A6EHE	LC1K06106K7
LC1D80008F7	LC1D80N7	LC1DMKV7	LC1DT32MD	LC1DT80A6FD	LC1K06107P7
LC1D80008FE7	LC1D80ND	LC1DPK12Q7C	LC1DT32P7	LC1DT80A6KUE	LC1K0610B5
LC1D80008G6	LC1D80P5	LC1DPKB7C	LC1DT32U7	LC1DT80A6MD	LC1K0610B7
LC1D80008G7	LC1D80P7	LC1DPKF7	LC1DT403BL	LC1DT80AB7	LC1K0610B72
LC1D80008M7	LC1D80Q5	LC1DPKM7	LC1DT403E7	LC1DT80ABBE	LC1K0610D5
LC1D80008P7	LC1D80Q7	LC1DPKP7	LC1DT406BD	LC1DT80ABD	LC1K0610D7
LC1D80008Q7	LC1D80R7	LC1DPKU7	LC1DT406BL	LC1DT80ABNE	LC1K0610E5
LC1D80008U7	LC1D80S5	LC1DPKV7	LC1DT406GD	LC1DT80AC7	LC1K0610E7
LC1D806B7	LC1D80SD	LC1DT203B7	LC1DT406K7	LC1DT80ACD	LC1K0610F7
LC1D806BD	LC1D80SW	LC1DT203FL	LC1DT406M7	LC1DT80AE7	LC1K0610F72
LC1D806F5	LC1D80T6	LC1DT206BD	LC1DT40B7	LC1DT80AEHE	LC1K0610FE7
LC1D806F7	LC1D80U5	LC1DT206BL	LC1DT40BD	LC1DT80AF7	LC1K0610G7
LC1D806FD	LC1D80U7	LC1DT206M7	LC1DT40BL	LC1DT80AFD	LC1K0610K7
LC1D806FW	LC1D80U7M	LC1DT20B7	LC1DT40D7	LC1DT80AFE7	LC1K0610L7
LC1D806G7	LC1D80V7	LC1DT20BD	LC1DT40E7	LC1DT80AG7	LC1K0610M7
LC1D806K7	LC1D956BD	LC1DT20BL	LC1DT40ED	LC1DT80AJD	LC1K0610M72
LC1D806L7	LC1D956F7	LC1DT20CD	LC1DT40F7	LC1DT80AKUE	LC1K0610N7
LC1D806LE7	LC1D956K7	LC1DT20E7	LC1DT40FD	LC1DT80ALE7	LC1K0610P5
LC1D806M7	LC1D956M7	LC1DT20F7	LC1DT40FE7	LC1DT80AM7	LC1K0610P7
LC1D806P7	LC1D956P7	LC1DT20FD	LC1DT40G7	LC1DT80AN7	LC1K0610P72
LC1D806VD	LC1D95B5	LC1DT20FE7	LC1DT40GD	LC1DT80AND	LC1K0610Q7
LC1D80A3B7	LC1D95B7	LC1DT20G7	LC1DT40JD	LC1DT80AP7	LC1K0610T7
LC1D80A3E7	LC1D95BD	LC1DT20GD	LC1DT40JL	LC1DT80AQ7	LC1K0610U7
LC1D80A3P7	LC1D95BW	LC1DT20M7	LC1DT40LE7	LC1DT80AU7	LC1K0610V7
LC1D80A6BBE	LC1D95D7	LC1DT20MD	LC1DT40M7	LC1DTKF7	LC1K090043E7
LC1D80A6BNE	LC1D95E5	LC1DT20ML	LC1DT40MD	LC1DTKM7	LC1K090045E7
LC1D80A6EHE	LC1D95E7	LC1DT20N7	LC1DT40ND	LC1DTKP7	LC1K09004B7
LC1D80A6KUE	LC1D95ED	LC1DT20ND	LC1DT40P7	LC1DTKQ7C	LC1K09004B72
LC1D80A6M7	LC1D95F5	LC1DT20P7	LC1DT40SD	LC1DWK12F7	LC1K09004E7
LC1D80A6P7	LC1D95F7	LC1DT20U7	LC1DT40U7	LC1DWK12G7	LC1K09004F7
LC1D80AB7	LC1D95FD	LC1DT20UD	LC1DT40V7	LC1DWK12M5	LC1K09004FE7
LC1D80ABBE	LC1D95FE7	LC1DT253BD	LC1DT60A3BD	LC1DWK12M7	LC1K09004M7
LC1D80ABNE	LC1D95G7	LC1DT253BL	LC1DT60A3E7	LC1DWK12N7	LC1K09004M72
LC1D80AE7	LC1D95K7	LC1DT253E7	LC1DT60A3P7	LC1DWK12P5	LC1K09004P7
LC1D80AEHE	LC1D95M5	LC1DT256BD	LC1DT60A6BBE	LC1DWK12P7	LC1K09004Q7
LC1D80AF7	LC1D95M7	LC1DT256BL	LC1DT60A6BNE	LC1DWK12Q7	LC1K09004U7
LC1D80AFE7	LC1D95MD	LC1DT256FD	LC1DT60A6ED	LC1DWK12U7	LC1K090083E7
LC1D80AG7	LC1D95MW	LC1DT256M7	LC1DT60A6EHE	LC1DWK12V7	LC1K090083P7
LC1D80AKUE	LC1D95N7	LC1DT256P7	LC1DT60A6F7	LC1DWKB7C	LC1K090085E7
LC1D80AM7	LC1D95P5	LC1DT25B7	LC1DT60A6GD	LC1K06013FE7	LC1K090085F7
LC1D80AN7	LC1D95P7	LC1DT25BD	LC1DT60A6KUE	LC1K06013P7	LC1K090085P7
LC1D80AP7	LC1D95Q5	LC1DT25BL	LC1DT60A6MD	LC1K06015B7	LC1K090087P7
LC1D80AQ7	LC1D95Q7	LC1DT25CD	LC1DT60A6SD	LC1K06015F7	LC1K090087S7
LC1D80AR7	LC1D95R7	LC1DT25E7	LC1DT60AB7	LC1K06015M7	LC1K09008B7
LC1D80AU7	LC1D95S5	LC1DT25ED	LC1DT60ABBE	LC1K06017P7	LC1K09008D7
LC1D80AV7	LC1D95SD	LC1DT25F7	LC1DT60ABD	LC1K0601B5	LC1K09008E7
LC1D80B5	LC1D95U5	LC1DT25FD	LC1DT60ABNE	LC1K0601B7	LC1K09008F7
LC1D80B7	LC1D95U7	LC1DT25G7	LC1DT60ACD	LC1K0601D5	LC1K09008G7
LC1D80BD	LC1D95U7C	LC1DT25GD	LC1DT60AD7	LC1K0601D7	LC1K09008K7
LC1D80BW	LC1D95V7	LC1DT25JD	LC1DT60AE7	LC1K0601E5	LC1K09008M7

This document is current. Click on the product reference to get the most recent availability status (hyperlink to **se.com** product datasheet).
If your product variant is no longer available, please consult your distributor or regional sales office.

Product references

LC1K09008M72	LC1K120085E7	LC1SK0600F7	LC2D12BNE	LC2D32BNE	LC2D65AU7
LC1K09008N7	LC1K12008B7S17	LC1SK0600M7	LC2D12D7	LC2D32D7	LC2D65F7
LC1K09008P7	LC1K12008E7S17	LC1SK0600P7	LC2D12E7	LC2D32E7	LC2D65G7
LC1K09008S7	LC1K12008F7S17	LC1SK0600U7	LC2D12ED	LC2D32EHE	LC2D80004M5
LC1K09008U7	LC1K12013F7	LC1SK0600V7	LC2D12EHE	LC2D32F7	LC2D80004M7
LC1K09008V7	LC1K12015P7	LC1SKGC200B7	LC2D12F7	LC2D32FE7	LC2D80004P5
LC1K09008W7	LC1K1201B5	LC1SKGC200E7	LC2D12FD	LC2D32G7	LC2D80004P7
LC1K09008Y7	LC1K1201B7	LC1SKGC200F7	LC2D12FE7	LC2D32G7V	LC2D80ABBE
LC1K09013B7	LC1K1201D5	LC1SKGC200M7	LC2D12G7	LC2D32KUE	LC2D80ABNE
LC1K09013P7	LC1K1201D7	LC1SKGC200P7	LC2D12G7V	LC2D32M7	LC2D80AEHE
LC1K09015B7	LC1K1201E5	LC1SKGC200U7	LC2D12KUE	LC2D32P7	LC2D80AKUE
LC1K09015FE7	LC1K1201E7	LC1SKGC200V7	LC2D12M7	LC2D32P7V	LC2D80B7
LC1K09015M7	LC1K1201F7	LC1SKGC301P7	LC2D12P7	LC2D32Q7	LC2D80E7
LC1K09016K7	LC1K1201M7	LC1SKGC310E7	LC2D12Q7	LC2D32V7	LC2D80F5
LC1K09017B7	LC1K1201N7	LC1SKGC310M7	LC2D12R7	LC2D386BL	LC2D80F7
LC1K09017E7	LC1K1201P5	LC1SKGC310P7	LC2D150B7	LC2D38B7	LC2D80FE7
LC1K0901B5	LC1K1201P7	LC1SKGC400P7	LC2D150BD	LC2D38BD	LC2D80G7
LC1K0901B7	LC1K1201U7	LC2D093BD	LC2D150E7	LC2D38BL	LC2D80K7
LC1K0901B72	LC1K1201V7	LC2D093BL	LC2D150F7	LC2D38E7	LC2D80M7
LC1K0901C7	LC1K12103M7	LC2D096BD	LC2D150G7	LC2D38EHE	LC2D80P7
LC1K0901D5	LC1K12103P7	LC2D096BL	LC2D150M7	LC2D38F7	LC2D95B7
LC1K0901D7	LC1K12105B7	LC2D096FD	LC2D150P7	LC2D38KUE	LC2D95E7
LC1K0901E5	LC1K12105M7	LC2D099B7	LC2D150Q7	LC2D38P7	LC2D95F7
LC1K0901E7	LC1K12105P7	LC2D09B7	LC2D183BD	LC2D40A3FE7	LC2D95M7
LC1K0901F7	LC1K1210B5	LC2D09B7V	LC2D18B7	LC2D40AB7	LC2D95P7
LC1K0901F72	LC1K1210B7	LC2D09BD	LC2D18B7V	LC2D40ABBE	LC2DT20P7
LC1K0901G7	LC1K1210D5	LC2D09BDV	LC2D18BD	LC2D40ABD	LC2DT25BD
LC1K0901M7	LC1K1210D72	LC2D09BL	LC2D18BDV	LC2D40ABNE	LC2DT25E7
LC1K0901N7	LC1K1210E5	LC2D09BLV	LC2D18BL	LC2D40AE7	LC2DT25G7
LC1K0901P5	LC1K1210E7	LC2D09BNE	LC2D18BNE	LC2D40AEHE	LC2DT25P7
LC1K0901P7	LC1K1210F7	LC2D09E7	LC2D18D7	LC2D40AF7	LC2DT32BD
LC1K0901P72	LC1K1210F72	LC2D09ED	LC2D18E7	LC2D40AFE7	LC2DT32E7
LC1K0901Q7	LC1K1210FE7	LC2D09EHE	LC2D18ED	LC2D40AG7	LC2DT32F7
LC1K0901T7	LC1K1210G7	LC2D09F7	LC2D18EHE	LC2D40AJD	LC2DT32G7
LC1K0901U7	LC1K1210M7	LC2D09FE7	LC2D18F7	LC2D40AKUE	LC2DT32P7
LC1K0901V7	LC1K1210P5	LC2D09G7	LC2D18FE7	LC2D40AM7	LC2DT32U7
LC1K09103B7	LC1K1210P7	LC2D09G7V	LC2D18G7	LC2D40AP7	LC2DT403E7
LC1K09103M7	LC1K1210P72	LC2D09JL	LC2D18G7V	LC2D40AV7	LC2DT40BD
LC1K09105D7	LC1K1210Q7	LC2D09K7	LC2D18JD	LC2D40F7	LC2DT40E7
LC1K09105E7	LC1K1210T7	LC2D09KUE	LC2D18KUE	LC2D50AB7	LC2DT40F7
LC1K09105F7	LC1K1210U7	LC2D09M7	LC2D18L7	LC2D50ABBE	LC2DT40G7
LC1K09105P7	LC1K1210V7	LC2D09ND	LC2D18M7	LC2D50ABD	LC2DT40GD
LC1K09107E7	LC1K16004F7	LC2D09P7	LC2D18P7	LC2D50ABNE	LC2DT40M7
LC1K09107F7	LC1K16015P7	LC2D09Q7	LC2D18Q7	LC2D50AE7	LC2DT40P7
LC1K0910B5	LC1K1601B5	LC2D09U7	LC2D18V7	LC2D50AED	LC2K06015B7
LC1K0910B7	LC1K1601B7	LC2D09U7V	LC2D256BL	LC2D50AEHE	LC2K06015M7
LC1K0910D5	LC1K1601D5	LC2D09V7	LC2D25B7	LC2D50AF7	LC2K0601B7
LC1K0910E5	LC1K1601E5	LC2D115004M5	LC2D25B7V	LC2D50AFD	LC2K0601B72
LC1K0910E7	LC1K1601E7	LC2D115004M7	LC2D25BD	LC2D50AFE7	LC2K0601E7
LC1K0910F7	LC1K1601F7	LC2D115004P5	LC2D25BL	LC2D50AG7	LC2K0601F7
LC1K0910F72	LC1K1601M7	LC2D115004P7	LC2D25BNE	LC2D50AK7	LC2K0601FE7
LC1K0910G7	LC1K1601P5	LC2D1156F7	LC2D25D7	LC2D50AKUE	LC2K0601G7
LC1K0910K7	LC1K1601P7	LC2D1156M7	LC2D25E7	LC2D50AL7	LC2K0601K7
LC1K0910L7	LC1K1601Q7	LC2D115B7	LC2D25ED	LC2D50AM7	LC2K0601M7
LC1K0910M7	LC1K1601V7	LC2D115BD	LC2D25EHE	LC2D50AND	LC2K0601P7
LC1K0910M72	LC1K16106M7	LC2D115E7	LC2D25F7	LC2D50AP7	LC2K0601P72
LC1K0910N7	LC1K1610B5	LC2D115F7	LC2D25FE7	LC2D50G7	LC2K0601U7
LC1K0910P5	LC1K1610B7	LC2D115FE7	LC2D25G7	LC2D65AB7	LC2K06103P7
LC1K0910P7	LC1K1610D5	LC2D115G7	LC2D25G7V	LC2D65ABBE	LC2K06105B7
LC1K0910P72	LC1K1610D7	LC2D115M5	LC2D25K7	LC2D65ABD	LC2K06105M7
LC1K0910Q7	LC1K1610E5	LC2D115M7	LC2D25KUE	LC2D65ABNE	LC2K0610B7
LC1K0910R7	LC1K1610F7	LC2D115P7	LC2D25M7	LC2D65AE7	LC2K0610D72
LC1K0910S7	LC1K1610K7	LC2D123BD	LC2D25P7	LC2D65AED	LC2K0610E7
LC1K0910SC7	LC1K1610M7	LC2D123BL	LC2D25P7V	LC2D65AEHE	LC2K0610F7
LC1K0910T7	LC1K1610P5	LC2D126L7	LC2D25U7	LC2D65AF7	LC2K0610FE7
LC1K0910U7	LC1K1610P7	LC2D129B7	LC2D25X7	LC2D65AFE7	LC2K0610M7
LC1K0910V7	LC1K1610Q7	LC2D12B7	LC2D323BD	LC2D65AG7	LC2K0610P7
LC1K12004B7	LC1K1610U7	LC2D12BD	LC2D32B7	LC2D65AKUE	LC2K0610P72
LC1K12004M7	LC1K1610V7	LC2D12BDV	LC2D32BD	LC2D65AL7	LC2K0610U7
LC1K12004P7	LC1SK0600B7	LC2D12BL	LC2D32BDV	LC2D65AM7	LC2K0610V7
LC1K12004T7	LC1SK0600E7	LC2D12BLV	LC2D32BL	LC2D65AP7	LC2K09004B7

This document is current. Click on the product reference to get the most recent availability status (hyperlink to **se.com** product datasheet).
If your product variant is no longer available, please consult your distributor or regional sales office.

Life Is On Schneider Electric

Product references

LC2K09004E7	LC3D150M7A64	LP1K0601BD3	LP1K0910GD	LP4K0601SW3	LX1D6U7
LC2K09004F7	LC3D150P7	LP1K0601ED	LP1K0910JD	LP4K06103BW3	LX1D6V7
LC2K09004G7	LC3D150P7A64	LP1K0601FD	LP1K0910MD	LP4K06105BW3	LX1D8B7
LC2K09004M7	LC3D180AB7	LP1K0601MD	LP1K0910SD	LP4K0610BW3	LX1D8E7
LC2K09013P7	LC3D18AB7	LP1K0601ND	LP1K120043BD3	LP4K0610EW3	LX1D8F7
LC2K09015D7	LC3D18AF7	LP1K0601SD	LP1K12004BD	LP4K0610FW3	LX1D8FE7
LC2K09015E7	LC3D18AU7	LP1K06103BD	LP1K12004FD	LP4K09004BW3	LX1D8G7
LC2K09015F7	LC3D320AG7	LP1K06103BD3	LP1K12004JD	LP4K090085BW3	LX1D8L7
LC2K09015P7	LC3D320AP7	LP1K06103ED	LP1K12013BD3	LP4K090087BW3	LX1D8M5
LC2K0901B7	LC3D32AB7	LP1K06105BD	LP1K12015BD	LP4K09008BW3	LX1D8M7
LC2K0901D7	LC3D32AF7	LP1K06106BD	LP1K12015MD	LP4K09008EW3	LX1D8N7
LC2K0901E7	LC3D32AP7	LP1K0610BD	LP1K12015MDS35	LP4K09008SW3	LX1D8P7
LC2K0901F7	LC3D80B7	LP1K0610BD3	LP1K1201BD	LP4K09013BW3	LX1D8Q5
LC2K0901F72	LC3D80B7A64	LP1K0610ED	LP1K1201BD3	LP4K09015BW3	LX1D8Q7
LC2K0901G7	LC3D80E7A64	LP1K0610FD	LP1K1201ED	LP4K0901BW3	LX1D8R7
LC2K0901M7	LC3D80F7	LP1K0610FD3	LP1K1201FD	LP4K0901FW3	LX1D8T7
LC2K0901P7	LC3D80F7A64	LP1K0610JD	LP1K1201MD	LP4K09103BW3	LX1D8U7
LC2K0901U7	LC3D80M7	LP1K0610MD	LP1K12103BD	LP4K09105BW3	LX1D8V7
LC2K0901V7	LC3D80P7	LP1K0610MPD	LP1K12103BD3	LP4K09106BW3S16	LX4D2UD
LC2K09103B7	LC3D80P7A64	LP1K090043BD	LP1K12105BD	LP4K09107BW3	LX4D7BD
LC2K09103E7	LC3D80U7A64	LP1K090045BD	LP1K1210BD	LP4K0910BW3	LX4D7JD
LC2K09105B7	LC3K09P7	LP1K090045ND	LP1K1210BD3	LP4K0910FW3	LX4D8BD
LC2K09105E7	LC7K0601M7	LP1K09004BD	LP1K1210ED	LP4K0910JW3	LX4D8MD
LC2K09105M7	LC7K0610M7	LP1K09004BD3	LP1K1210FD	LP4K12004BW3	LXD1B7
LC2K09107B7	LC7K09004B7	LP1K09004ED	LP1K1210JD	LP4K12015BW3	LXD1C7
LC2K0910B7	LC7K09004M7	LP1K09004FD	LP1K1210MD	LP4K12016BW3S16	LXD1D7
LC2K0910D7	LC7K09015M7	LP1K09004GD	LP1K1210SD3	LP4K1201BW3	LXD1E7
LC2K0910D72	LC7K0901M7	LP1K09004JD	LP1SK0600BD	LP4K1201EW3	LXD1F7
LC2K0910E7	LC7K0910B7	LP1K09004MD	LP1SK0600ED	LP4K12103BW3	LXD1FE7
LC2K0910F7	LC7K0910M7	LP1K090085BD	LP1SK0600JD	LP4K12106BW3S16	LXD1G7
LC2K0910M7	LC7K1201E7	LP1K090085MD	LP2K06013BD	LP4K1210BW3	LXD1J7
LC2K0910P7	LC7K1201F7	LP1K090085MDS35	LP2K06015BD	LP4K1210SW3	LXD1L7
LC2K0910U7	LC7K1201M7	LP1K09008BD	LP2K06015BD3	LP5K06015BW3	LXD1LE7
LC2K12004F7	LC7K1210F7	LP1K09008BD3	LP2K0601BD	LP5K0601BW3	LXD1M7
LC2K1201B7	LP1D400086SW	LP1K09008ED	LP2K0601BD3	LP5K0610BW3	LXD1N7
LC2K1201B72	LP1D40008BD	LP1K09008FD	LP2K0601ED	LP5K09004BW3	LXD1P7
LC2K1201E7	LP1D40008ED	LP1K09008JD	LP2K0601JD	LP5K09013BW3	LXD1Q7
LC2K1201F7	LP1D40008FD	LP1K09008MD	LP2K06103BD3	LP5K0901BW3	LXD1R7
LC2K1201G7	LP1D40008GD	LP1K09008ND	LP2K0610BD	LP5K0910BW3	LXD1S7
LC2K1201M7	LP1D40008MD	LP1K09013BD	LP2K0610BD3	LP5K12004BW3	LXD1SC7
LC2K1201P7	LP1D40008MW	LP1K09013BD3	LP2K0610JD	LP5K12015BW3	LXD1T7
LC2K1201U7	LP1D40008ND	LP1K09015BD	LP2K09004BD3	LP5K1201BW3	LXD1U7
LC2K12105B7	LP1D65008BD	LP1K09015UD	LP2K09013BD	LP5K1201SW3	LXD1V7
LC2K12105F7	LP1D65008FD	LP1K0901BD	LP2K09015BD	LP5K1210BW3	LXD1W7
LC2K12107B7	LP1D800046SW	LP1K0901BD3	LP2K0901BD	LX1D6B5	LXD1X7
LC2K1210B7	LP1D80004BD	LP1K0901ED	LP2K0901BD3	LX1D6B6	LXD1Y7
LC2K1210D7	LP1D80004BW	LP1K0901ED3	LP2K0901ED	LX1D6B7	LXD3B7
LC2K1210E7	LP1D80004ED	LP1K0901FD	LP2K0901JD	LX1D6E7	LXD3D7
LC2K1210F7	LP1D80004FD	LP1K0901GD	LP2K0901ND	LX1D6F5	LXD3E7
LC2K1210G7	LP1D800086SW	LP1K0901JD	LP2K09105BD	LX1D6F7	LXD3F7
LC2K1210K7	LP1D80008BD	LP1K0901MD	LP2K0910BD	LX1D6G7	LXD3FE7
LC2K1210L7	LP1D80008BW	LP1K0901ND	LP2K0910BD3	LX1D6L6	LXD3G7
LC2K1210M7	LP1D80008ED	LP1K0901SD3	LP2K0910ED	LX1D6M5	LXD3LE7
LC2K1210P7	LP1D80008FD	LP1K09103BD	LP2K1201BD	LX1D6M6	LXD3M7
LC2K1601K7	LP1D80008MD	LP1K09103BD3	LP2K1201BD3	LX1D6M7	LXD3N7
LC2K1610B7	LP1D80008MW	LP1K09105BD	LP2K12105BD	LX1D6N7	LXD3P7
LC2K1610F7	LP1K06013BD	LP1K09105BD3	LP2K1210BD	LX1D6P7	LXD3Q7
LC2K1610P7	LP1K06013BD3	LP1K0910BD	LP2K1210BD3	LX1D6Q7	LXD3R7
LC3D115F7A64	LP1K06013MD3	LP1K0910BD3	LP2K1210JD	LX1D6R7	LXD3T7
LC3D115M7A64	LP1K06015BD	LP1K0910ED	LP4K06013BW3	LX1D6T6	LXD3U7
LC3D115P7	LP1K06016BD	LP1K0910ED3	LP4K06016BW3S16	LX1D6U5	LXD3V7
LC3D115P7A64	LP1K0601BD	LP1K0910FD	LP4K0601BW3	LX1D6U6	LXD3X7

This document is current. Click on the product reference to get the most recent availability status (hyperlink to **se.com** product datasheet).
If your product variant is no longer available, please consult your distributor or regional sales office.

TeSys SK, K, SKGC, Deca, Modular Contactors

Technical Data for Designers

Contactors

Contents

TeSys SK Contactors:
> characteristics.....B8/66 to B8/69
> dimensions..... B8/70

TeSys SKGC Contactors:
> characteristics.....B8/71 to B8/74
> dimensions.....B8/75

TeSys K Contactors:
> characteristics.....B8/76 to B8/79
> dimensions.....B8/80 to B8/83

Deca Advanced, Deca contactors:
> characteristics.....B8/84 to B8/98
> dimensions.....B8/99 to B8/112

Modular Contactors:
> characteristics.....B8/113 to B8/115
> dimensions.....B8/120 and B8/121

Modular Dual tariff contactors:
> characteristics.....B8/123 to B8/125
> dimensions.....B8/126 and B8/127

Modular Impulse relay:
> characteristics.....B8/128 to B8/131
> dimensions.....B8/132

Standard IEC tests - Contactors conforming to UL/CSA.....B8/133

Environment

Rated insulation voltage (Ui)	Conforming to 60947	**V**	690	
Conforming to standards			IEC/EN 60947-4-1, UL 60947-4-1, CSA C22.2 n° 60947-4-1	
Approvals			cULus, EAC, UKCA, CB certification	
Degree of protection	Conforming to IEC 60529		Protection against direct finger contact IP2x	
Ambient air temperature around the device	Storage	**°C**	-50…+70	
	Operation	**°C**	-20…+50	
Maximum operating altitude	Without derating	**m**	2000	
Operating position			**Vertical axis** / **Horizontal axis** 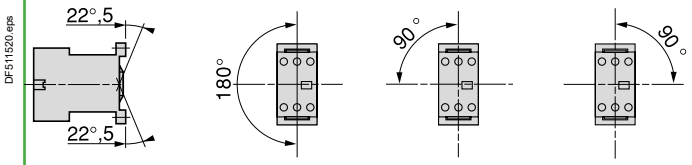 Without derating / Without derating	
Cabling, screw clamp terminals			Min	Max
	Solid conductor	**mm²**	1 x 1.5 or 2 x 1.5	1 x 6 or 2 x 4
	Flexible cable without cable end	**mm²**	1 x 0.5 or 2 x 0.35	1 x 6 or 2 x 2.5
	Flexible cable with cable end	**mm²**	1 x 0.35 or 2 x 0.35	1 x 6 or 2 x 1.5
Tightening torque	Pozidriv n° 1 head	**N.m**	0.8	
Terminal referencing			Conforming to standards En 50005	

Ref.

Contactors

References:
pages B8/2 and B8/3

Curves:
page B8/73

Dimensions:
page B8/74

Schemes:
page B8/74

Life Is On Schneider Electric

Pole characteristics

Conventional thermal current (Ith)	For ambient temperature ≤ 55 °C	**A**	12
Rated operational frequency		**Hz**	50/60
Frequency limits of the operational current		**Hz**	Up to 400
Rated operational voltage (Ue)		**V**	690
Rated making capacity	I rms conforming to IEC 60947-1	**A**	66
Rated breaking capacity (for Ue ≤ 400 V)	Conforming to IEC 60947-1	**A**	52
Short time rating	In free air for a time "t" from cold state (θ ≤ 55 °C)	**A**	50
Short-circuit protection	gl fuse U ≤ 440 V	**A**	16
Average impedance per pole	At Ith and 50 Hz	**mΩ**	4
Maximum rated operational current			
For a temperature ≤ 55 °C	AC-3 (1) (Ue ≤ 400 V)	**A**	6
	AC-1	**A**	12
Utilisation in category AC-1 resistive circuits, heating, lighting (Ue ≤ 440 V)	Increase in operational current by paralleling of poles	**A**	20

Auxiliary contact characteristics of add-on blocks

Rated operational voltage (Ue)	Up to	**V**	690
Rated insulation voltage (Ui)	Conforming to IEC 60947, IEC 60947-1	**V**	690
Conventional thermal current (Ith)	For ambient temperature ≤ 55 °C	**A**	10
Minimum switching capacity	Umin	**V**	17
	Imin	**mA**	10
Frequency of operational current		**Hz**	Up to 400
Short-circuit protection	Conforming to IEC 60947 and IEC 60947-1, gl fuse	**A**	10

Operational power of contacts conforming to IEC 60947

a.c. supply, category AC-15

Electrical durability (valid up to 3600 operating cycles per hour) on an inductive load such as the coil of an electromagnet: making current (cos φ 0.7) = 10 times the breaking current (cos φ 0.4).

	V	**24**	**48**	**110/127**	**220/230**	**380/400**	**440**
1 million operating cycles	**VA**	48	96	240	440	800	880
3 million operating cycles	**VA**	17	34	86	158	288	317
10 million operating cycles	**VA**	7	14	36	66	120	132
Occasional making capacity	**VA**	1000	2050	5000	10000	14000	13000

d.c. supply, category DC-13

Electrical durability (valid up to 1200 operating cycles per hour) on an inductive load such as the coil of an electromagnet, without economy resistor, the time constant increasing with the load.

	V	**24**	**48**	**110**	**220**	**440**	**440**
1 million operating cycles	**W**	120	80	60	52	51	880
3 million operating cycles	**W**	55	38	30	28	26	317
10 million operating cycles	**W**	15	11	9	8	7	132
Occasional making capacity	**W**	720	600	400	300	230	13000

(1) For LC1 contactors.

References: pages B8/2 and B8/3
Curves: page B8/73
Dimensions: page B8/74
Schemes: page B8/74

Characteristics

Control circuit characteristics

Type			LC1SK06	LP1SK06
Rated control circuit voltage (Uc)		**V**	∼ 24…400	⎓ 12…72
Control voltage limits (q ≤ 50 °C)	For operation		0.85…1.1 Uc	0.85…1.1 Uc
	For drop-out		≥ 0.20 Uc	≥ 0.10 Uc
Average coil consumption at 20 °C and at Uc	Inrush		16 VA	2.2 W
	Sealed		4.2 VA	2.2 W
Heat dissipation		**W**	1.4	2.2
Operating time at 20 °C and at Uc				
Between coil energisation and	opening of the N/C contacts	**ms**	8…16	10…18
	closing of the N/O contacts	**ms**	7…14	8…12
Between coil de-energisation and	opening of the N/O contacts	**ms**	6…8	4…6
	closing of the N/C contacts	**ms**	8…10	6…8
Maximum operating rate	In operating cycles per hour		1200	1200
Mechanical durability at Uc In millions of operating cycles	50/60 Hz coil		10	–
	⎓ coil		–	10

References: pages B8/2 and B8/3
Curves: page B8/73
Dimensions: page B8/74
Schemes: page B8/74

Use in category AC-3 (Ue ⩽ 440 V)

Control of 3-phase asynchronous squirrel cage motors with breaking whilst running.
The current broken (Ic) in category AC-3 is equal to the rated operational current (Ie) of the motor.

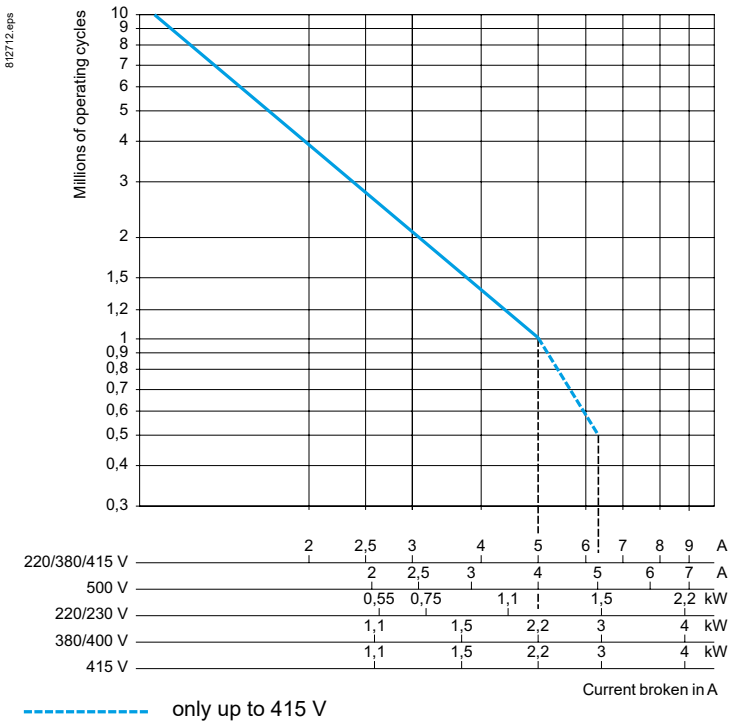

only up to 415 V

Use in category AC-1 (Ue ⩽ 440 V)

Control of resistive circuits (cos φ ⩾ 0.95).
The current broken (Ic) in category AC-1 is equal to the current (Ie) normally drawn by the load.

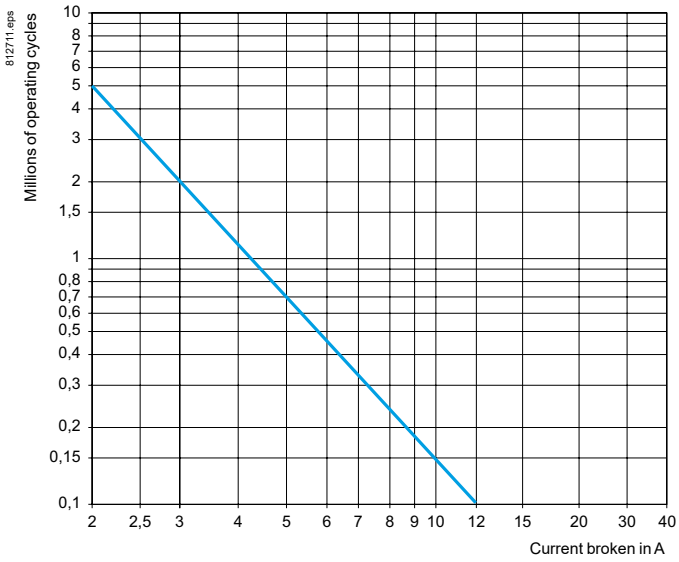

Dimensions, mounting and schemes

Dimensions

Mini-contactors

LC1 and LP1SK06

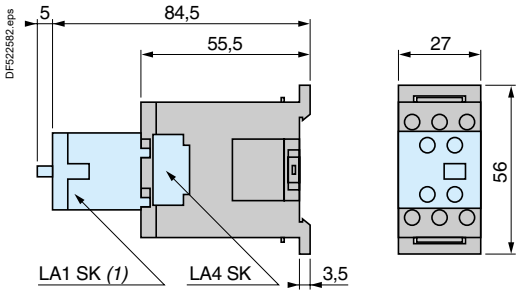

*(1) Only on **LC1SK06**.*

Mounting

Mini-contactors

LC1 and LP1SK06

On mounting rail NSYSDR200BD or NSYSDR200 (ـــ 35 mm)

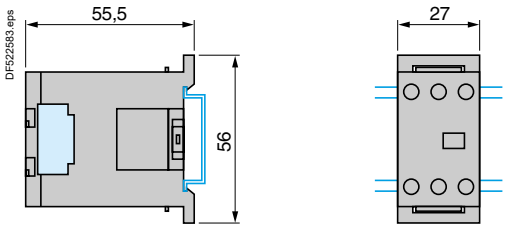

Schemes

2-pole mini-contactors

LC1 and LP1SK06

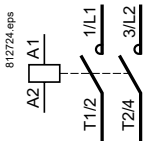

Add-on power pole block

1 pole + 1 "N/C" aux.

LA1SK01

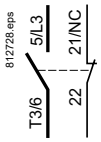

Instantaneous auxiliary contacts

2 "N/O"	2 "N/C"	1 "N/O" + 1 "N/C"
LA1SK20	**LA1SK02**	**LA1SK11**

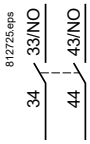

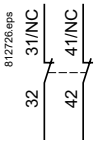

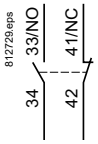

Ref.
Contactors

Characteristics

Environment

Rated insulation voltage (Ui)	Conforming to IEC 60947	**V**	690	
Conforming to standards			IEC 60947, UL 60947-4-1, CSA C22.2 n° 60947-4-1	
Approvals			cULus, UKCA	
Degree of protection	Conforming to IEC 60529		Protection against direct finger contact	
Ambient air temperature around the device				
	Storage	**°C**	-50…+70	
	Operation	**°C**	-20…+50	
Maximum operating altitude	Without derating	**m**	2000	
Operating position			**Vertical axis**	**Horizontal axis**
			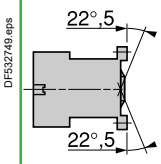 Without derating	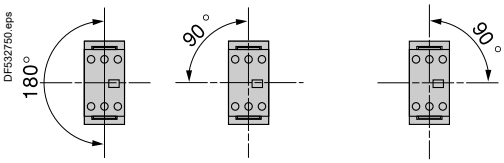 Without derating
Cabling, connectors			Min.	Max.
	Solid conductor	**mm²**	1 x 1.5 or 2 x 1.5	1 x 6 or 2 x 4
	Flexible cable without cable end	**mm²**	1 x 0.5 or 2 x 0.35	1 x 6 or 2 x 2.5
	Flexible cable with cable end	**mm²**	1 x 0.35 or 2 x 0.35	1 x 6 or 2 x 1.5
Tightening torque	Pozidriv n° 1 head	**N.m**	0.8	
Terminal referencing			Conforming to standards EN 50005	

References:
page B8/3

Dimensions, schemes:
page B8/75

Characteristics

Pole characteristics					
Mini-contactor type				**LC1SKGC2**	**LC1SKGC3 and LC1SKGC4**
Conventional thermal current (Ith)	For ambient temperature ≤ 55 °C		**A**	20	20
Rated operational frequency			**Hz**	50/60	
Frequency limit of the operational current			**Hz**	up to 400	
Rated operational voltage (Ue)			**V**	690	
Rated making capacity	I rms conforming to IEC 60947		**A**	50	85
Rated breaking capacity (for Ue ≤ 400 V)	Conforming to IEC 60947 (I rms)		**A**	40	68
Permissible short time rating	In free air for a time "t" from cold state (θ ≤ 55 °C)		**A**	40	60
Short-circuit protection	gl fuse U ≤ 440 V		**A**	20	20
Average impedance per pole	At Ith and 50 Hz		**mΩ**	4	4
Maximum rated operational current	For temperature ≤ 55 °C	AC-3 (Ue ≤ 400 V)	**A**	5	9
		AC-1	**A**	20	20
Use in category AC-1 resistive circuits, heating, lighting (Ue ≤ 440 V)	Increase in rated operational current by paralleling of 2 poles		**A**	32	32

Auxiliary contact characteristics of mini-contactors				
Rated operational voltage (Ue)	Up to	**V**	690	
Rated insulation voltage (Ui)	Conforming to IEC 60947	**V**	690	
Conventional thermal current (Ith)	For ambient temperature ≤ 55 °C	**A**	10	
Frequency of the operational current		**Hz**	Up to 400	
Short-circuit protection	Conforming to IEC 60947, gl fuse	**A**	10	

Operational power of contacts conforming to IEC 60947

a.c. supply, category AC-15

Electrical durability (valid for up to 3600 operating cycles/hour) on an inductive load such as the coil of an electromagnet: making current (cos φ 0.7) = 10 times the power broken (cos φ 0.4).

	V	**24**	**48**	**110/127**	**220/230**	**380/400**	**440**
1 million operating cycles	**VA**	48	96	240	440	800	880
3 million operating cycles	**VA**	17	34	86	158	288	317
10 million operating cycles	**VA**	7	14	36	66	120	132
Occasional making capacity	**VA**	1000	2050	5000	10000	14000	13000

d.c. supply, category DC-13

Electrical durability (valid for up to 1200 operating cycles/hour) on an inductive load such as the coil of an electromagnet, without economy resistor, the time constant increasing with the load.

	V	**24**	**48**	**110**	**220**	**440**	**440**
1 million operating cycles	**W**	120	80	60	52	51	880
3 million operating cycles	**W**	55	38	30	28	26	317
10 million operating cycles	**W**	15	11	9	8	7	132
Occasional making capacity	**W**	720	600	400	300	230	13000

References:
page B8/3
Dimensions, schemes:
page B8/75

Characteristics

Control circuit characteristics

Mini-contactor type			LC1SKGC2	LC1SKGC3 and LC1SKGC4
Rated control circuit voltage (Uc)		V	∿ 24…400	
Control voltage limits (θ ≤ 55 °C)	Operation		0.85…1.1 Uc	
	For drop-out		≥ 0.20 Uc	
Average coil consumption at 20 °C and at Uc				
	Inrush	VA	16	23
	Sealed	VA	4.2	4.9
Heat dissipation		W	1.4	1.5
Operating time at 20 °C and at Uc				
Between coil energisation and	opening of the N/C contacts	ms	8…16	
	closing of the N/O contacts	ms	7…14	
Between coil de-energisation and	opening of the N/O contacts	ms	6…8	
	closing of the N/C contacts	ms	8…10	
Maximum operating rate	In operating cycles per hour		1200	
Mechanical durability at Uc in millions of operating cycles	50/60 Hz coil		10	

References:
page B8/3

Dimensions, schemes:
page B8/75

Durability curves

Use in category AC-3 (Ue ⩽ 440 V)

Control of 3-phase asynchronous squirrel cage motors with breaking whilst running.
The current broken (Ic) in category AC-3 is equal to the rated operational current of the motor.

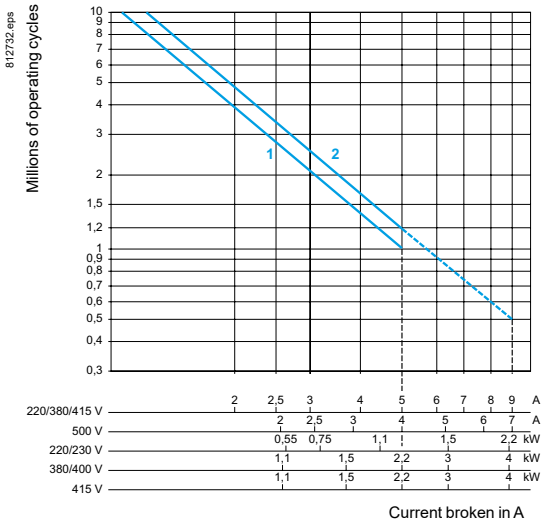

1. LC1SKGC2
2. LC1SKGC3 and SKGC4

- - - - - only up to 415 V

Use in category AC-1 (Ue ⩽ 440 V)

Control of resistive circuits (cos φ ⩾ 0.95).
The current broken (Ic) in category AC-1 is equal to the current (Ie) normally drawn by the load.

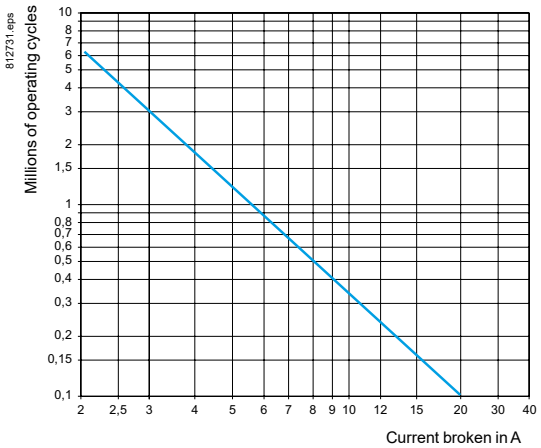

Ref.

Contactors

Dimensions, mounting and schemes

Dimensions	Mounting
Mini-contactors LC1SKGC2	**On mounting rail NSYSDR200BD or NSYSDR200 (⎓ 35 mm)**

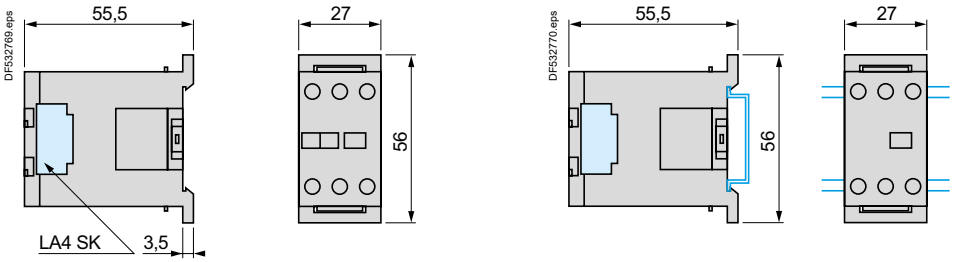

Dimensions	Mounting	
Mini-contactors LC1SKGC3 and SKGC4	**On panel**	**On mounting rail NSYSDR200BD or NSYSDR200 (⎓ 35 mm)**

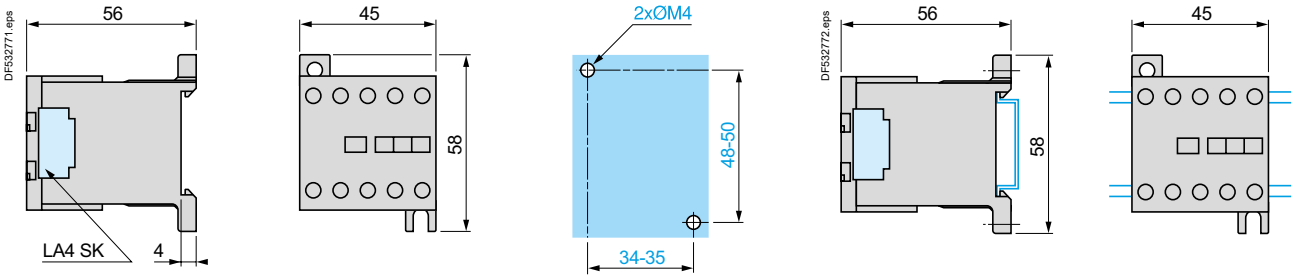

2-pole mini-contactors

LC1SKGC2

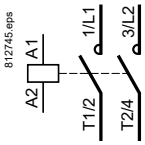

3-pole mini-contactors

LC1SKGC310

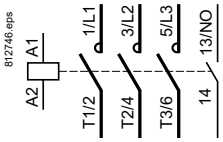

LC1SKGC301

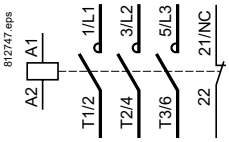

4-pole mini-contactors

LC1SKGC400

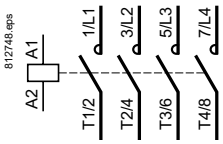

Ref.
Contactors

Environment characteristics

Conforming to standards			IEC/EN 60947-4-1, IEC/EN 60947-5-1, UL 60947-4-1, CSA C22.2 n° 60947-4-1, UL 60947-5-1, CSA C22.2 n° 60947-5-1, GB/T 14048.4		
Product certifications	LC● and LP●K06 to K12		UL, CSA, CCC, EAC, UKCA, CB certification		
	LC● and LP●K16		UKCA, CB certification, CCC, EA		
Operating positions			Vertical axis 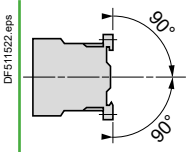 *Without derating*	Horizontal axis 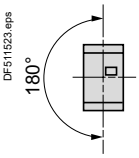 *Without derating*	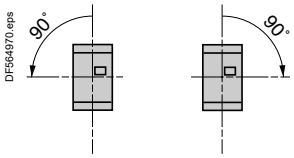 *Possible positions for* ***LC●K*** *only.* *Contactor pull-in voltage: 0.85 Uc*
Connection			**Min.**	**Max.**	**Max. to IEC 60947**
Screw clamp terminals	Solid conductor	**mm²**	1 x 1.5	2 x 4	1 x 4 + 1 x 2.5
	Flexible conductor without cable end	**mm²**	1 x 0.75	2 x 4	2 x 2.5
	Flexible conductor with cable end	**mm²**	1 x 0.34	1 x 1.5 + 1 x 2.5	1 x 1.5 + 1 x 2.5
Spring terminals	Solid conductor	**mm²**	1 x 0.75	1 x 1.5	2 x 1.5
	Flexible conductor without cable end	**mm²**	1 x 0.75	1 x 1.5	2 x 1.5
Faston connectors	Clip	**mm**	2 x 2.8 or 1 x 6.35		
Solder pins for printed circuit board			With locating device between power and control circuits pins length 5 mm Recommended minimum width and thickness layer for power printed circuit board track : 4mm x 35 microns		
Tightening torque	of screw-clamp terminals only Philips head n° 2 and Ø6	**N.m**	0.8…1.3		
Terminal referencing	Conforming to standards EN 50005 and EN 50012		Up to 5 contacts, depending on model		
Rated insulation voltage (Ui)	Conforming to IEC 60947-4-1	**V**	690		
	Conforming to CSA 22-2 n° 60947-4-1, UL 60947-4-1	**V**	600		
Rated impulse withstand voltage (Uimp)		**kV**	8		
Degree of protection	Conforming to IEC 60529		Protection against direct finger contact IP2x		
Ambient air temperature around the device	Storage	**°C**	-50…+80		
	Operation	**°C**	-25…+60 in AC3, -25…+70 in AC1		
Maximum operating altitude	Without derating	**m**	2000		
Vibration resistance 5 ... 300 Hz Conforming to IEC/EN 60068-2-27	Contactor open		2 gn		
	Contactor closed		4 gn		
Flame resistance	according to IEC 60695-2-10	**°C**	850		
Shock resistance (1/2 sine wave, 11 ms) Conforming to IEC/EN 60068-2-6	Contactor open		On X axis: 6 gn On Y and Z axes: 10 gn		
	Contactor closed		On X axis: 10 gn On Y and Z axes: 15 gn		

References:
pages B8/4 to B8/11
Dimensions:
pages B8/80 and B8/82
Schemes:
pages B8/81 and B8/83

Pole characteristics

Type		LC● or LP●		K06	K09	K12	K16
Conventional thermal current (Ith)	For ambient temperature ≤ 60 °C		A	20 (1)			
Rated operational frequency			Hz	50/60			
Frequency limits of the operational current			Hz	Up to 400			
Rated operational voltage (Ue)			V	690			
Rated making capacity	I rms conforming to IEC 60947		A	110	110	144	160
Rated breaking capacity	I rms conforming to IEC 60947	220/230 V	A	110	110	–	–
		380/400 V	A	110	110	–	–
		415 V	A	110	110	–	–
		440 V	A	110	110	110	110
		500 V	A	80	80	80	80
		660/690 V	A	70	70	70	70
Permissible short time rating	In free air for a time "t" from cold state (θ ≤ 50 °C)	1 s	A	90	90	115	115
		5 s	A	85	85	105	105
		10 s	A	80	80	100	100
		30 s	A	60	60	75	75
		1 min	A	45	45	55	55
		3 min	A	40	40	50	50
		≥ 15 min	A	20	20	25	25
Short-circuit protection (Type-1)	gG fuse U ≤ 440 V (aM fuse, see"Product references", page B11/2)		A	25			
Average impedance per pole	At Ith and 50 Hz		mΩ	3			
Use in category AC-1 resistive circuits, heating, lighting (Ue ≤ 440 V)	Maximum rated operational current for a temperature ≤ 60 °C		A	20			
	Maximum rated operational current for a temperature ≤ 70 °C		A	16			
	Rated operational current limits in relation to the on-load factor and operating frequency			On-load factor	90 %	60 %	30 %
			A	300 operating cycles/hour	13	15	18
			A	120 operating cycles/hour	15	18	19
			A	30 operating cycles/hour	19	20	20
	Increase in rated operational current by paralleling of poles			Apply the following coefficients to the above currents; these coefficients take into account an often unbalanced distribution of current between the poles			
				2 poles in parallel: K = 1.60			
				3 poles in parallel: K = 2.25			
				4 poles in parallel: K = 2.80			
Use in category AC-3/AC-3e squirrel cage motors	Operational power according to the voltage. Voltage 50 or 60 Hz	115 V single-ph.	kW	0.37	0.55	–	–
		220 V single-ph.	kW	0.75	1.1	–	–
		220/230 V 3-ph.	kW	1.5	2.2	3	4
		380/415 V 3-ph.	kW	2.2	4	5.5	7.5
		440/480 V 3-ph.	kW	3	4	5.5/4 (480)	5.5/4 (480)
		500/600 V 3-ph.	kW	3	4	4	4
		660/690 V 3-ph.	kW	3	4	4	4
	Maximum operating rate (in operating cycles/hour in relation to % of rated power)			Op. cycles/h	600	900	1200
				Power	100 %	75 %	50 %

*(1) For **LC●K●●●●3 / LP●K●●●●3** with spring terminal, Ith max = 16 A.*

Ref.
Contactors

Characteristics

Control circuit characteristics

Type			LC1	LC2	LC7	LC8	LP1	LP2	LP4	LP5
Rated control circuit voltage (Uc)		**V**	∼ 12…690 (1)		∼ 24…240 (1)		⎓ 12…250 (1)		⎓ 12…120	
Control voltage limits (≤ 50 °C) single voltage coil	Operation		0.8…1.15 Uc (2)		0.85…1.1 Uc		0.8…1.15 Uc		0.7…1.30 Uc	
	Drop-out		≥ 0.20 Uc		≥ 0.10 Uc		≥ 0.10 Uc		≥ 0.10 Uc	
Average consumption at 20 °C and at Uc	Inrush		30 VA		3 VA		3 W		1.8 W	
	Sealed		4.5 VA		3 VA		3 W		1.8 W	
Heat dissipation		**W**	1.3		3		3		1.8	
Operating time at 20 °C and at Uc										
Between coil energisation and:	- opening of the N/C contacts	**ms**	5…15		25…35		25…35		25…35	
	- closing of the N/O contacts	**ms**	10…20		30…40		30…40		30…40	
Between coil de-energisation and:	- opening of the N/O contacts	**ms**	10…20		30		10		10…20	
	- closing of the N/C contacts	**ms**	15…25		40		15		15…25	
Maximum immunity to microbreaks		**ms**	2		2		2		2	
Maximum operating rate	In operating cycles per hour		3600		3600		3600		3600	
Mechanical durability at Uc In millions of operating cycles	50/60 Hz coil		10	5	10	5	–	–	–	–
	⎓ coil		–	–	–	–	10	5	–	–
	Wide range coil, Low consumption		–	–	–	–	–	–	30	5

*(1) For mains supplies with a high level of interference (voltage surge > 800 V), use a suppressor module **LA4KE1FC** (50…129 V) or **LA4KE1UG** (130…250 V), see page B8/14.*
*(2) **LC1K12, LC1K16...** : 0.85…1.15 Uc.*

Ref.

Contactors

References:
pages B8/4 to B8/11

Dimensions:
pages B8/80 and B8/82

Schemes:
pages B8/81 and B8/83

Life Is On Schneider Electric

Characteristics and durability curves

Auxiliary contact characteristics of contactors and instantaneous contact blocks

Number of auxiliary contacts	On LC●K or LP●K 3-pole			1
	On LA1K			2 or 4
Rated operational voltage (Ue)	Up to		**V**	690
Rated insulation voltage (Ui)	Conforming to IEC 60947		**V**	690
	Conforming to UL 60947-5-1, CSA C22.2 n° 60947-5-1		**V**	600
Conventional thermal current (Ith)	For ambient temperature ≤ 50 °C		**A**	10
Frequency of the operational current			**Hz**	Up to 400
Minimum switching capacity	U min		**V**	17
	I min		**mA**	5
Short-circuit protection	Conforming to IEC 60947, gG fuse		**A**	10
Rated making capacity	Conforming to IEC 60947	I rms	**A**	110
Short-time rating	Permissible for	1 s	**A**	80
		500 ms	**A**	90
		100 ms	**A**	110
Insulation resistance			**MΩ**	> 10
Non-overlap distance	LA1K: linked contacts conforming to INRS, BIA and CNA specifications		**mm**	0.5 (see schemes pages B8/81 and B8/83)

Power broken in VA

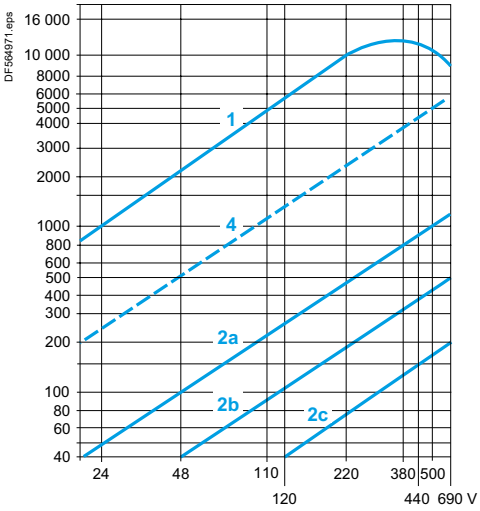

Power broken in W

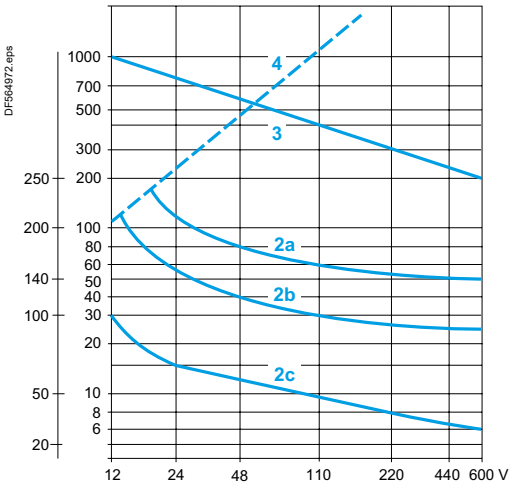

Operational power of contacts conforming to IEC 60947

a.c. supply, category AC-15

Electrical durability (valid for up to 3600 operating cycles/hour) on an inductive load such as the coil of an electromagnet: making current (cos φ 0.7) = 10 times the power broken (cos φ 0.4).

Operating cycles	V	24	48	110/ 127	220/ 230	380/ 400	440	600/ 690
1 million operating cycles	**VA**	48	96	240	440	800	880	1200
3 million operating cycles	**VA**	17	34	86	158	288	317	500
10 million operating cycles	**VA**	7	14	36	66	120	132	200
Occasional making capacity	**VA**	1000	2050	5000	10000	14000	13000	9000

d.c. supply, category DC-13

Electrical durability (valid for up to 1200 operating cycles/hour) on an inductive load such as the coil of an electromagnet, without economy resistor, the time constant increasing with the load.

Operating cycles	V	24	48	110	220	440	600
1 million operating cycles	**W**	120	80	60	52	51	50
3 million operating cycles	**W**	55	38	30	28	26	25
10 million operating cycles	**W**	15	11	9	8	7	6
Occasional making capacity	**W**	720	600	400	300	230	200

1. Breaking limit of contacts valid for:
   - maximum of 50 operating cycles at 10 s intervals (power broken = making current x cos φ 0.7).
2. Electrical durability of contacts for:
   - 1 million operating cycles (2a)
   - 3 million operating cycles (2b)
   - 10 million operating cycles (2c).
3. Breaking limit of contacts valid for:
   - maximum of 20 operating cycles at 10 s intervals with current passing for 0.5 s per operating cycle.
4. Thermal limit.

Ref.
Contactors

References:
pages B8/4 to B8/11

Dimensions:
pages B8/80 and B8/82

Schemes:
pages B8/81 and B8/83

Dimensions and mounting

Contactors

LC1K, LC7K, LP1K, LP4K

On panel

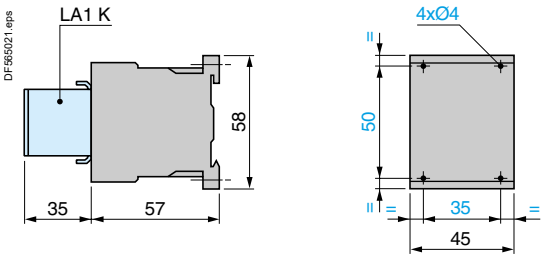

On mounting rail NSYSDR200BD or NSYSDR200 (⎓ 35 mm)

DX1AP25

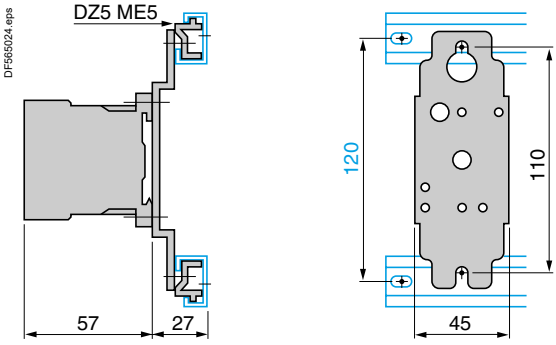

On printed circuit board

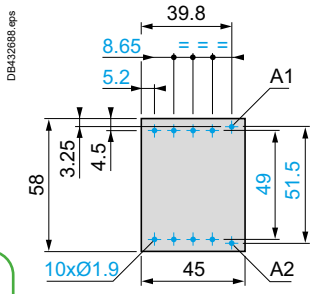

Electronic time delay contact blocks

LA2KT

On contactor

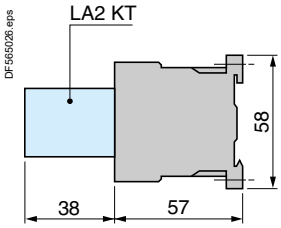

Suppressor modules

LA4K●

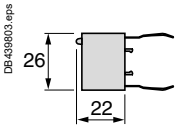

On contactor LC1K or LP1K

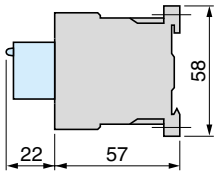

References:
pages B8/4 to B8/14

Characteristics:
pages B8/76 to B8/79

Schemes:
page B8/81

Life Is On Schneider Electric

Schemes

3-pole contactors

3 P + N/O

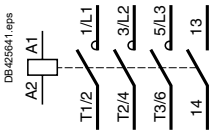

3 P + N/C

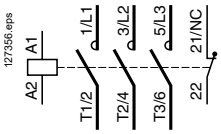

With integral suppression device

LC7K

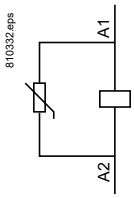

LP4K

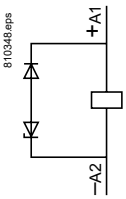

4-pole contactors

4 P

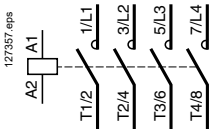

2 P N/O + 2 P N/C

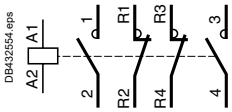

With integral suppression device

LC7K

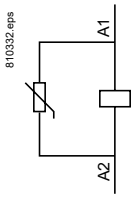

LP4K

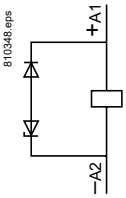

Instantaneous auxiliary contacts LA1K

LA1KN20, KN207, KN203

2 N/O

LA1KN02, KN027, KN023

2 N/C

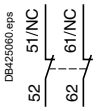

LA1KN11, KN117, KN113

1 N/O + 1 N/C

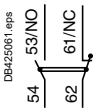

LA1KN40, KN407, KN403

4 N/O

LA1KN31, KN317, KN313

3 N/O + 1 N/C

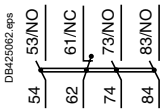

LA1KN22, KN227, KN223

2 N/O + 2 N/C

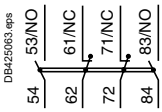

LA1KN13, KN137, KN133

1 N/O + 3 N/C

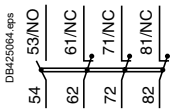

LA1KN04, KN047, KN043

4 N/C

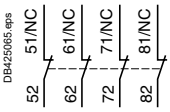

Terminal referencing conforming to standard EN 50012

LA1KN02M

2 N/C

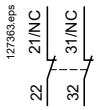

LA1KN11M

1 N/O + 1 N/C

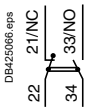

LA1KN31M

3 N/O + 1 N/C

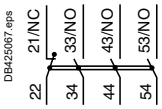

LA1KN22M

2 N/O + 2 N/C

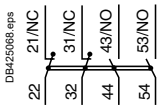

Electronic time delay contact blocks

LA2KT

1 C/O

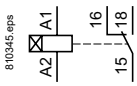

Suppressor modules

LA4KC

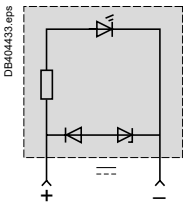

LA4KE

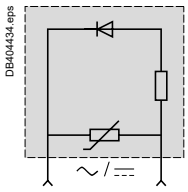

References:
pages B8/4 to B8/14

Characteristics:
pages B8/76 to B8/79

Dimensions:
page B8/80

Dimensions and mounting

Reversing contactors

LC2K, LC8K, LP2K, LP5K

On panel

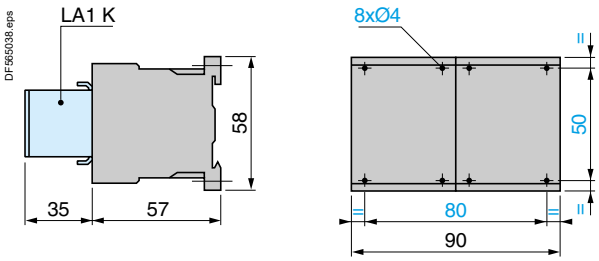

On mounting rail NSYSDR200BD or NSYSDR200 (⎓ 35 mm)

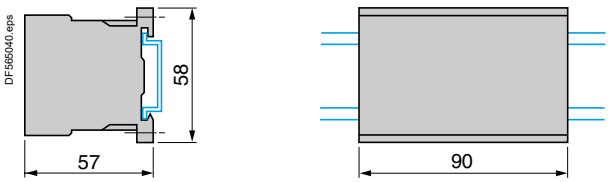

2 x DX1AP25

On one asymmetrical mounting rail DZ5MB on 2 mounting plates DX1AP25.

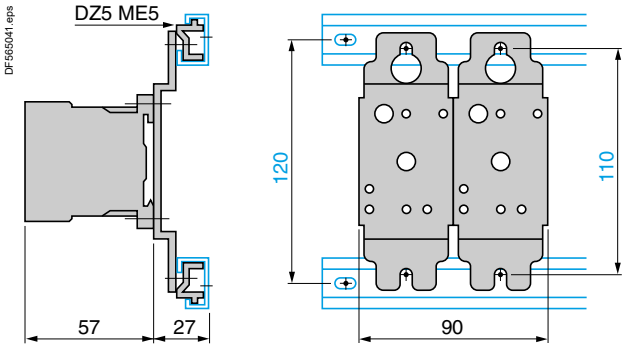

On printed circuit board for reversing contactors or 2 contactors mounted side by side.

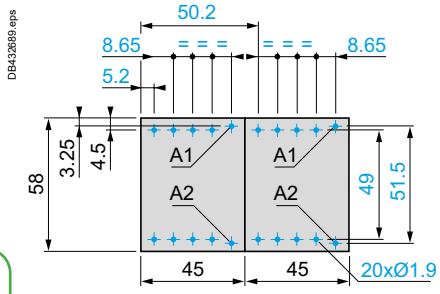

Electronic time delay contact blocks

LA2KT

On reversing contactors

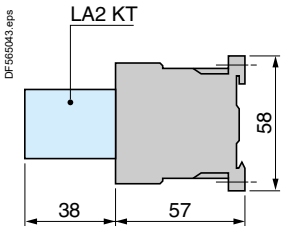

Suppressor modules

LA4K●

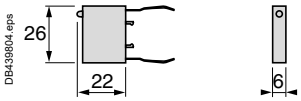

On reversing contactors LC2K or LP2 K

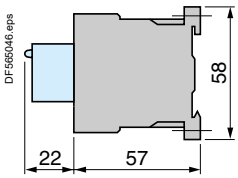

References:
pages B8/8 to B8/14

Characteristics:
pages B8/76 to B8/79

Schemes:
page B8/83

Life Is On Schneider Electric

Schemes

3-pole reversing contactors

With integral suppression device

With screw clamp connections — **LC8K** — **LP5K**

3 P + N/O

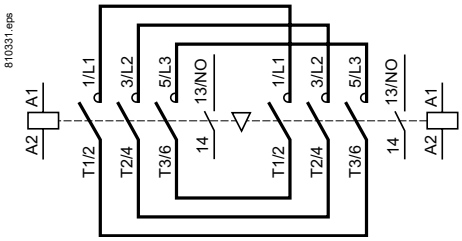

3 P + N/C

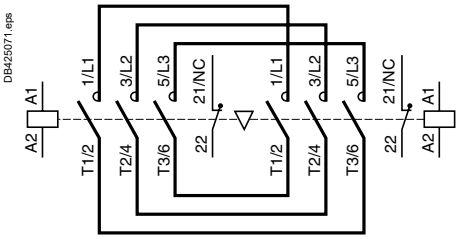

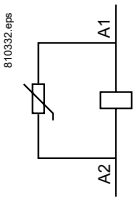

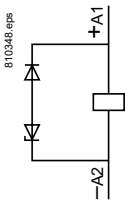

With Faston connectors or solder pins (printed circuit board)

3 P + N/O

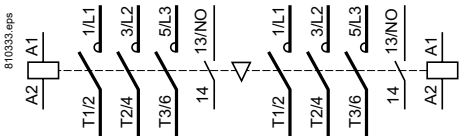

3 P + N/C

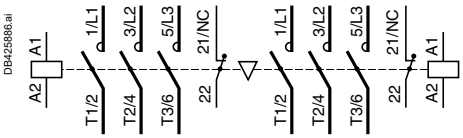

4-pole reversing contactors

Integral suppression device

With screw clamp connections — **With Faston connectors or solder pins (printed circuit board)** — **LC8K** — **LP5K**

4 P

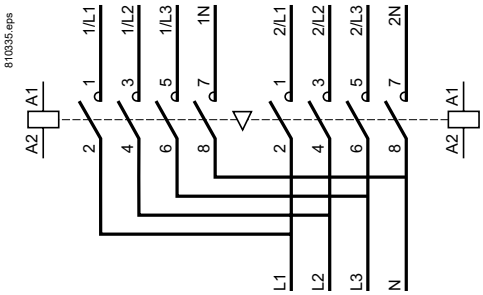

4 P

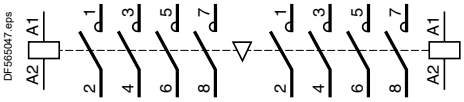

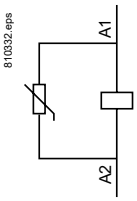

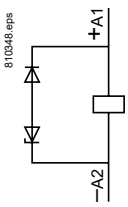

Instantaneous auxiliary contacts LA1K

Terminal referencing conforming to standard EN 50012

LA1KN20, KN207, KN203	LA1KN02, KN027, KN023	LA1KN11, KN117, KN113	LAKN02M	LA1KN11M
2 N/O	2 N/C	1 N/O + 1 N/C	2 N/C	1 N/O + 1 N/C

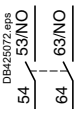

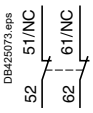

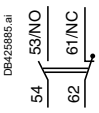

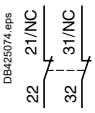

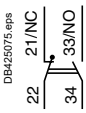

LA1KN40, KN407, KN403	LA1KN31, KN317, KN313	LA1KN22, KN227, KN223	LA1KN13, KN137, KN133	LA1KN04, KN047, KN043
4 N/O	3 N/O + 1 N/C	2 N/O + 2 N/C	1 N/O + 3 N/C	4 N/C

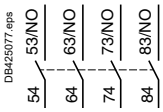

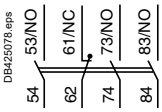

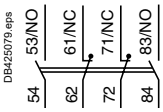

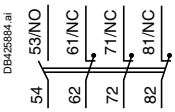

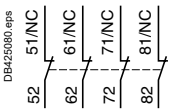

Electronic time delay contact blocks

LA2KT

1 C/O

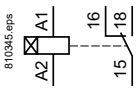

Suppressor modules

LA4KC — **LA4KE**

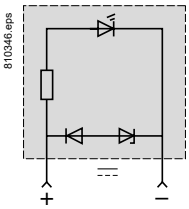

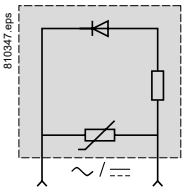

References:
pages B8/8 to B8/14

Characteristics:
pages B8/76 to B8/79

Dimensions:
page B8/82

Environment

Contactor type LC1			D09…D18 DT20 and DT25	D25…D38 DT32 and DT40	D40A…D80A DT60A and DT80A	D80…D95 (1)	D115 and D150
Rated insulation voltage (Ui)	Conforming to IEC 60947-4-1, overvoltage category III, degree of pollution: 3	**V**	690			1000	
	Conforming to UL, CSA	**V**	600				
Rated impulse withstand voltage (Uimp)	Conforming to IEC 60947	**kV**	6			8	
Conforming to standards			IEC/EN 60947-4-1, IEC/EN 60947-5-1, UL 60947-4-1, CSA C22.2 n° 60947-4-1, UL 60947-5-1, CSA C22.2 n° 60947-5-1, GB/T 14048.4				
Product certifications (1)			UL, CSA, CCC, EAC, UKCA, CB certification, EU-RO-MR by DNV-GL			UL, CSA, CCC, EAC, UKCA, CB certification, DNV-GL, RINA, BV, LRoS	
Degree of protection (2) (front face)	Conforming to IEC 60529						
	Power circuit connections		Protection against direct finger contact IP20				
	Coil connection		Protection against direct finger contact IP20				
Climatic withstand			According to IACS E10 and IEC 60947-1 Annex Q category D			According to IACS E10	
Ambient air temperature around the device	Storage	**°C**	-60…+80				
	Operation (3)	**°C**	-40...+60				
	Allowed with derating (3) (4)	**°C**	+60…+70 at Uc to 1.●● x Uc				
Maximum operating altitude	Without derating	**m**	3000				
Operating positions (5)	Without derating in the following positions		AC and DC coils AC/DC and "BBE" coils 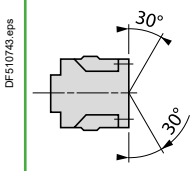		AC coils AC/DC and "BBE" coils 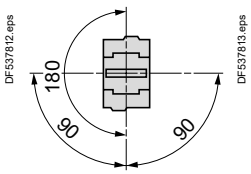		DC coils 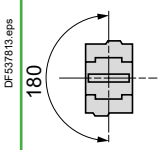
	Positions that are not allowed		For ⎓ contactors LC1D09 to LC1D150. 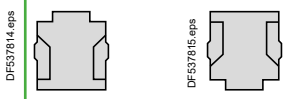				
Flame resistance	Conforming to IEC 60695-2-11	**°C**	850				
Shock resistance (6) 1/2 sine wave = 11 ms Conforming to IEC/EN 60068-2-27	Contactor open		10 gn	8 gn	10 gn	8 gn	6 gn
	Contactor closed		15 gn	15 gn	15 gn	10 gn	15 gn
Vibration resistance (6) 5…300 Hz Conforming to IEC/EN 60068-2-6	Contactor open		2 gn				
	Contactor closed		4 gn	4 gn	4 gn	3 gn	4 gn

*(1) Contactor **LC1D95** with d.c. coil is not UL/CSA certified.*
(2) Protection provided for the cabling c.s.a.'s indicated on the next page and for connection by cable. For lug type: add a protective cover.
(3) As per IEC60947-4-1, operating time and drop out voltage given and tested for -5...+40 °C.
(4) Refer to operational current in AC1 (page A5/102).
(5) When mounting on a vertical rail, use a stop.
(6) Without modifying the power contact states, in the most unfavourable direction (coil energised at Ue).
In case of vibration, it is recommended to mount the devices separately by screws on metal plate.

Ref.
Contactors

Pole characteristics Deca, Deca Advanced contactors

Contactor type		LC1		D09 (3P)	DT20 D098	D12 (3P)	DT25 D128	D18 (3P)	DT32 D188	D25 (3P)	DT40 D258
Rated operational current (Ie) (Ue ≤ 440 V)	In AC-3/AC-3e, θ ≤ 60 °C		A	9		12		18		25	
	In AC-1, θ ≤ 60 °C		A	25 (1)	20	25 (1)	25	32 (1)	32	40 (1)	40
Rated operational voltage (Ue)	Up to (as per IEC 60947-1)		V	690		690		690		690	
Frequency limits	Of the operational current		Hz	25…400		25…400		25…400		25…400	
Conventional thermal current (Ith)	θ ≤ 60 °C		A	25 (1)	20	25 (1)	25	32 (1)	32	40 (1)	40
Rated making capacity (440 V)	Conforming to IEC 60947		A	250		250		300		450	
Rated breaking capacity (440 V)	Conforming to IEC 60947		A	250		250		300		450	
Permissible short time rating No current flowing for preceding 15 minutes with θ ≤ 40 °C	For 1 s		A	210		210		240		380	
	For 10 s		A	105		105		145		240	
	For 1 min		A	61		61		84		120	
	For 10 min		A	30		30		40		50	
Fuse protection against short-circuits (U ≤ 690 V)	Without thermal overload relay, gG fuse	type 1	A	25		40		50		63	
		type 2	A	20		25		35		40	
	With thermal overload relay		A	See pages B11/4 and B11/5, for aM or gG fuse ratings corresponding to the associated thermal overload relay							
Average impedance per pole	At Ith and 50 Hz		mΩ	2.5		2.5		2.5		2	
Power dissipation per pole for the above operational currents	AC-3/AC-3e		W	0.20		0.36		0.8		1.25	
	AC-1		W	1.56		1.56		2.5		3.2	

Control circuit characteristics, a.c. supply Deca contactors

Rated control circuit voltage (Uc)			50/60 Hz	V	12…690
Rated operational voltage		Conforming to IEC 60947-1		V	690
		Conforming to UL, CSA (5)		V	600
Control voltage limits					
50 or 60 Hz coils		Operation			–
		Drop-out			–
50/60 Hz coils (6)		Operation			0.8…1.1 Uc on 50 Hz and 0.85…1.1 Uc on 60 Hz at 60 °C
		Drop-out			0.3…0.6 Uc at 60 °C
Average consumption at 20 °C and at Uc	∼ 50 Hz	Inrush	50 Hz coil	VA	–
			Cos φ		0.75
			50/60 Hz coil	VA	70
		Sealed	50 Hz coil	VA	–
			Cos φ		0.3
			50/60 Hz coil	VA	7.5
	∼ 60 Hz	Inrush	60 Hz coil	VA	–
			Cos φ		0.75
			50/60 Hz coil	VA	70
		Sealed	60 Hz coil	VA	–
			Cos φ		0.3
			50/60 Hz coil	VA	7
Heat dissipation	50/60 Hz			W	2…3
Operating time (2)		Closing "C"		ms	12…22
		Opening "O"		ms	4…19
Mechanical durability in millions of operating cycles		50 or 60 Hz coil			–
		50/60 Hz coil on 50 Hz			15
Maximum operating rate at ambient temperature ≤ 60 °C		In operating cycles per hour			3600

(1) Versions with spring terminal connections:
*16 A for **LC1D093** and **LC1D123** (20 A possible with 2 x 2.5 mm² in parallel),*
*25 A for **LC1D183** to **LC1D323** (32 A possible for **LC1D183** connected with 2 x 4 mm² cables in parallel; 40 A possible for **LC1D253** and **LC1D323** connected with 2 x 4 mm² in parallel).*
(2) The closing time "C" is measured from the moment the coil supply is switched on to closure of the main poles. The opening time "O" is measured from the moment the coil supply is switched off to the moment the main poles separate.
*(3) The opening time is 40…75 ms for **LX1D8●7** coils and 6...20 ms for **LX1D8●5** and **LX1D8●6** coils.*
*(4) 2400 for **LX1D8●5** and **LX1D8●6** coils and 1200 for **LX1D8●7** coils (refer to page B8/128 for list of coil references).*
*(5) The **LC1D95** contactor with d.c.coil is not UL/CSA certified.*
*(6) **LXD3G7/ LXD3LE7 & LXD3T7** coils used with **LC1D40A...80A**, **LC1DT60A** and **LC1DT80A** contactors are suitable only at 50 Hz.*
*Refer to page B8/49 for details on **LXD3** type coils.*

References: pages B8/19 to B8/29
Dimensions: pages B8/99 to B8/105
Schemes: pages B8/106 and B8/107

D32	D38	D40A	DT60A	D50A	D65A	D80A	DT80A	D80	D95	D115	D150
32	38	40	–	50	65	66	–	80	95	115	150
50 (1)	50	60	60	80	80	80	80	125	125	200	200
690	690	690	690	690	690	690	690	690	690	1000	1000
25…400	25…400	25…400	25…400	25…400	25…400	25…400	25…400	25…400	25…400	25…400	25…400
50	50	60	60	80	80	80	80	125	125	200	200
550	550	800	800	900	1000	1000	1000	1100	1100	1260	1660
550	550	800	800	900	1000	1000	1000	1100	1100	1100	1400
430	430	720	720	810	900	900	900	990	1100	1100	1400
260	310	320	320	400	640	640	640	640	800	950	1200
138	150	165	165	208	260	260	260	320	400	550	580
60	60	72	72	84	110	110	110	135	135	250	250
63	63	80	80	100	125	125	125	200	200	250	315
63	63	80	80	100	125	125	125	160	160	200	250
See pages B11/4 and B11/5 for aM or gG fuse ratings corresponding to the associated thermal overload relay											
2	2	1.5	1.6	1.5	1.5	1.5	1.6	0.8	0.8	0.6	0.6
2	3	2.4	–	3.7	6.3	6.3	–	5.1	7.2	7.9	13.5
5	5	5.4	5.8	9.6	9.6	9.6	10.2	12.5	12.5	24	24
12…690		12…690								24…500	
										1000	
–		–						0.85…1.1 Uc at 55 °C			
–		–						0.3…0.6 Uc at 55 °C		0.3…0.5 Uc at 55 °C	
0.8…1.1 Uc on 50 Hz and 0.85…1.1 Uc on 60 Hz at 60 °C		0.8…1.1 Uc on 50 Hz and 0.85…1.1 Uc on 60 Hz at 60 °C						0.8…1.1 Uc on 50 Hz and 0.85…1.1 Uc on 60 Hz at 55 °C		0.8…1.15 Uc on 50/60 Hz at 55 °C	
0.3…0.6 Uc at 60 °C		0.3…0.6 Uc at 60 °C						0.3…0.6 Uc at 55 °C		0.3…0.5 Uc at 55 °C	
–		–						200		300	–
0.75		0.75						0.75		0.8	0.9
70		160						245		280…350	280…350
–		–						20		22	–
0.3		0.3						0.3		0.3	0.9
7.5		15						26		2…18	2…18
–		–						220		300	–
0.75		0.75						0.75		0.8	0.9
70		140						245		280…350	280…350
–		–						22		22	–
0.3		0.3						0.3		0.3	0.9
7		13						26		2…18	2…18
2…3		4…5						6…10		3…8	3…4.5
12…22		12…26	12…26	12…26	12…26	12…26	12…26	20…35	20…35	20…50	20…35
4…19		4…19	4…19	4…19	4…19	4…19	4…19	6…20	6…20	6…20 (3)	40…75
–		–	–	–	–	–	–	10	10	8	–
15		6	6	6	6	6	6	4	4	8	8
3600		3600	3600	3600	3600	3600	3600	3600	3600	2400 (4)	1200

Ref.

Contactors

d.c. control circuit characteristics Deca contactors

Contactor type				LC1D09…D38 LC1DT20…DT40	LC1D40A…D80A LC1DT60A and DT80A	LC1 or LP1D80 LC1D95	LC1D115 and LC1D150
Rated control circuit voltage (Uc)	⎓		V	12…440	12…440		24…440
Rated operational voltage	Conforming to IEC 60947-1		V	690			1000
	Conforming to UL, CSA (2)		V	600			
Control voltage limits	Operation	Standard coil		0.7…1.25 Uc at 60 °C	0.75…1.25 Uc at 60 °C	0.85…1.1 Uc at 55 °C	0.75…1.2 Uc at 55 °C
		Wide range coil		–	–	0.75…1.2 Uc at 55 °C	–
	Drop-out			0.1…0.25 Uc at 60 °C	0.1…0.3 Uc at 60 °C	0.1…0.3 Uc at 55 °C	0.15…0.4 Uc at 55 °C
Average consumption at 20 °C and at Uc	⎓	Inrush	W	5.4	19	22	270…365
		Sealed	W	5.4	7.4	22	2.4…5.1
Operating time (1) average at Uc	Closing	"C"	ms	63 ±15 %	50 ±15%	95…130	20…35
	Opening	"O"	ms	20 ±20 %	20 ±20%	20…35	40…75
				Note: The arcing time depends on the circuit switched by the poles. For all normal 3-phase applications, the arcing time is less than 10 ms. The load is isolated from the supply after a time equal to the sum of the opening time and the arcing time.			
Time constant (L/R)			ms	28	34	75	25
Mechanical durability at Uc	In millions of operating cycles			30	10	10	8
Maximum operating rate at ambient temperature ⩽ 60 °C	In operating cycles per hour			3600	3600	3600	1200

Low consumption control circuit characteristics Deca contactors

Rated operational voltage	Conforming to IEC 60947-1		V	690	–
	Conforming to UL, CSA		V	600	–
Maximum voltage	Of the control circuit on ⎓		V	250	–
Average consumption d.c. at 20 °C and at Uc	Wide range coil (0.8…1.25 Uc)	Inrush	W	2.4	–
		Sealed	W	2.4	–
Operating time (1) at Uc and at 20 °C	Closing	"C"	ms	77 ±15 %	–
	Opening	"O"	ms	25 ±20 %	–
Voltage limits (θ ⩽ 60 °C) of the control circuit	Operation			0.8 to 1.25 Uc	–
	Drop-out			0.1…0.3 Uc	–
Time constant (L/R)			ms	40	–
Mechanical durability	In millions of operating cycles			30	–
Maximum operating rate at ambient temperature ⩽ 60 °C	In operating cycles per hour			3600	–

(1) The operating times depend on the type of contactor electromagnet and its control mode.
The closing time "C" is measured from the moment the coil supply is switched on to initial contact of the main poles.
The opening time "O" is measured from the moment the coil supply is switched off to the moment the main poles separate.
*(2) The **LC1D95** contactor with d.c.coil is not UL/CSA certified.*

References:
pages B8/23 to B8/29
Dimensions:
pages B8/99 to B8/102
Schemes:
pages B8/106 and B8/107

Wide band Deca Advanced contactors AC/DC coil circuit characteristics

Rated control circuit voltage (Uc)		V	AC/DC 24...250
	Operation	V	0.85 Uc mini...1.1 Uc maxi at 60 °C in AC or DC (BNE coil: 0.8 Uc mini at 24 VDC, 0.85 Uc mini in AC).
	Drop-out	V	0.1 Uc maxi (e.g. 100 to 250 V = 25 V at 60 °C)

Contactor type			**LC1D09...D38**			**LC1D40A...D80A, LC1DT60A, LC1DT80A**			
Coil code			**BNE**	**EHE**	**KUE**	**BBE**	**BNE**	**EHE**	**KUE**
Rated control circuit voltage (Uc)			24…60	48…130	100…250	24 DC	24…60	48…130	100…250
Rated operational voltage	Conforming to IEC 60947-1	V	690						
	Conforming to UL, CSA	V	600						
AC supply at 20°C	Consumption inrush	VA	15	25	25	-	15	23	18
	Consumption sealed	VA	0.9	1.3	1.6	-	1	1.4	1.8
	Consumption sealed	mA	28	15	9	-	35	17	9.5
	Heat dissipation	W	0.6	0.8	1.1	-	0.8	0.9	1.3
DC supply at 20°C	Consumption inrush	W	14	24	18	11	16	19	14
	Consumption sealed	mA	23	13	7	20	30	15	7.7
	Heat dissipation	W	0.6	0.8	1.1	0.5	0.7	0.9	1.2
Max operating time [2]	Closing "C"	ms	50 ±5 ms			60 ±5 ms			
	Opening "O"	ms	20...90 ms			20...80 ms			
EMC immunity			Meets IEC 60947-4-1 standard, table 12						
EMC emission	IEC 60947-4-1 §9.4.3		Environment A [1]						
Maximum operating rate at ambient temperature ≤ 60°C		cycle/h	3600						
Mechanical durability at Uc In millions of operating cycles			15			6			

(1) Use of this product in EMC environment B may require mitigation measures to avoid unwanted disturbance.
(2) The closing time "C" is measured from the moment the coil supply is switched on to closure of the main poles. The opening time "O" is measured from the moment the coil supply is switched off to the moment the main poles separates.

References:
pages B8/19 to B8/22
Dimensions:
pages B8/103 to B8/105
Schemes:
pages B8/106 and B8/107

Power circuit connections

Screw clamp terminal connections Deca, Deca Advanced contactors

Contactor type	LC1		D09 and D12 DT20 and DT25	D18 (3P)	D25 (3P)	D32	D38	D18 and D25 (4P) DT32 and DT40	D40A to D80A DT60A and DT80A [1]	D80 and D95	D115 and D150
Tightening			Screw clamp terminals					Connector 2 inputs	Screw clamp terminals	Connector 1 input	Connector 2 inputs
Flexible cable without cable end	1 conductor	mm²	1…4	1.5…6	2.5…10			2.5…10	1…35	4…50	10…120
	2 conductors	mm²	1…4	1.5…6	2.5…10			2.5…10	1…25 and 1…35	4…25	10…120 + 10…50
Flexible cable with cable end	1 conductor	mm²	1…4	1…6	1…10			2.5…10	1…35	4…50	10…120
	2 conductors	mm²	1…2.5	1…4	1.5…6			2.5…10	1…25 and 1…35	4…16	10…120 + 10…50
Solid cable without cable end	1 conductor	mm²	1…4	1.5…6	1.5…10			2.5…16	1…35	4…50	10…120
	2 conductors	mm²	1…4	1.5…6	2.5…10			2.5…16	1…25 and 1…35	6…25	10…120 + 10…50
Screwdriver	Philips / Pozidriv		N° 2	N° 2	N° 2			N° 2	–	–	–
	Flat screwdriver Ø		Ø6	Ø6	Ø6			Ø6	–	Ø6…Ø8	–
Hexagonal key			–	–	–			–	4	4	4
Tightening torque		N.m	1.7	1.7	2.5			1.8	5: ≤ 25 mm² 8: 35 mm²	12 [3]	12

Spring terminal connections [2] Deca contactors

Flexible cable without cable end	1 conductor	mm²	2.5 (4: DT25)	4	4	4	–	10	–	–	
	2 conductors	mm²	2.5 (except DT25)	4	4	4	–	–	–	–	

Connection by bars or lugs Deca contactors

Bar c.s.a.			–	–	–	–		–	–	3 x 16	5 x 25
Lug external Ø		mm	8	8	10	10		8	16.5	17	25
Ø of screw		mm	M3.5	M3.5	M4	M4		M3.5	M6	M6	M8
Screwdriver	Philips / Pozidriv		N° 2	N° 2	N° 2	N° 2		N° 2	–	–	–
	Flat screwdriver Ø		Ø6	Ø6	Ø6	Ø6		Ø6	–	Ø8	–
Key for hexagonal headed screw			–	–	–	–		–	10	10	13
Tightening torque		N.m	1.7	1.7	2.5	2.5		1.8	6	9	12

Control circuit connections

Connection by cable (tightening via screw clamps) Deca, Deca Advanced contactors

Flexible cable without cable end	1 conductor	mm²	1…4	1…4	1…4	1…4		1…4	1…4	1…4	1…2.5
	2 conductors	mm²	1…4	1…4	1…4	1…4		1…4	1…4	1…4	1…2.5
Flexible cable with cable end	1 conductor	mm²	1…4	1…4	1…4	1…4		1…4	1…4	1…2.5	1…2.5
	2 conductors	mm²	1…2.5	1…2.5	1…2.5	1…2.5		1…2.5	1…2.5	1…2.5	1…2.5
Solid cable without cable end	1 conductor	mm²	1…4	1…4	1…4	1…4		1…4	1…4	1…4	1…2.5
	2 conductors	mm²	1…4	1…4	1…4	1…4		1…4	1…4	1…4	1…2.5
Screwdriver	Philips / Pozidriv		N° 2	N° 2	N° 2	N° 2		N° 2	N° 2	N° 2	N° 2
	Flat screwdriver Ø		Ø6	Ø6	Ø6	Ø6		Ø6	Ø6	Ø6	Ø6
Tightening torque		N.m	1.7	1.7	1.7	1.7		1.7	1.7	1.2	1.2

Spring terminal connections [2] Deca contactors

Flexible cable without cable end	1 conductor	mm²	2.5	2.5	2.5	2.5	–	2.5	0.75…2.5	–	–
	2 conductors	mm²	2.5	2.5	2.5	2.5	–	2.5	0.75…2.5	–	–

Connection by bars or lugs Deca contactors

Lug external Ø		mm	8	8	8	8		8	8	8	8
Ø of screw		mm	M3.5	M3.5	M3.5	M3.5		M3.5	M3.5	M3.5	M3.5
Screwdriver	Philips / Pozidriv		N° 2	N° 2	N° 2	N° 2		N° 2	N° 2	N° 2	N° 2
	Flat screwdriver Ø		Ø6	Ø6	Ø6	Ø6		Ø6	Ø6	Ø6	Ø6
Tightening torque		N.m	1.7	1.7	1.7	1.7		1.7	1.7	1.2	1.2

*(1) BTR screws: hexagon socket head. In accordance with local electrical wiring regulations, a size 4 insulated Allen key must be used (reference **LADALLEN4**, see page B8/121).*
(2) If cable ends are used, choose the next size down (example: for 2.5 mm², use 1.5 mm²) and square crimp the cable ends using a special tool.
(3) Tightening torque for D80/ D95 (S207 Railway offers) is 5 N.m. Refer to LVCATRAIL_EN Catalogue for complete details on contactors for railway applications.

References:
pages B8/19 to B8/29
Dimensions:
pages B8/99 to B8/105
Schemes:
pages B8/106 and B8/107

Characteristics of auxiliary contacts incorporated in the contactor

Mechanically linked contacts	Conforming to IEC 60947-5-1			Each contactor has 2 N/O and N/C contacts mechanically linked on the same movable contact holder
Mirror contact	Conforming to IEC 60947-4-1			The N/C contact on each contactor represents the state of the power contacts and can be connected to a PREVENTA safety module
Rated operational voltage (Ue)	Up to		**V**	690
Rated insulation voltage (Ui)	Conforming to IEC 60947-1		**V**	690
	Conforming to UL, CSA		**V**	600
Conventional thermal current (Ith)	For ambient temperature ≤ 60 °C		**A**	10
Frequency of the operational current			**Hz**	25…400
Minimum switching capacity λ = 10^{-8}	U min		**V**	17
	I min		**mA**	5
Short-circuit protection	Conforming to IEC 60947-5-1			gG fuse: 10 A
Rated making capacity	Conforming to IEC 60947-5-1, I rms		**A**	∿: 140, ⎓: 250
Short-time rating	Permissible for	1 s	**A**	100
		500 ms	**A**	120
		100 ms	**A**	140
Insulation resistance			**MΩ**	> 10
Non-overlap time	Guaranteed between N/C and N/O contacts		**ms**	1.5 (on energisation and on de-energisation)
Tightening torque	Pozidriv / Philips head n° 2 and Ø6		**N.m**	1.7

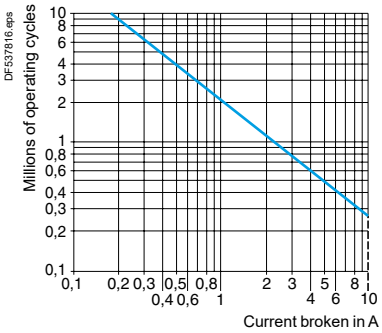

AC-15

Operational power of contacts conforming to IEC 60947-5-1

a.c. supply, categories AC-14 and AC-15

Electrical durability (valid for up to 3600 operating cycles/hour) on an inductive load such as the coil of an electromagnet: making current (cos φ 0.7) = 10 times the power broken (cos φ 0.4).

Operating cycles	V	24	48	115	230	400	440	600
1 million	**VA**	60	120	280	560	960	1050	1440
3 million	**VA**	16	32	80	160	280	300	420
10 million	**VA**	4	8	20	40	70	80	100

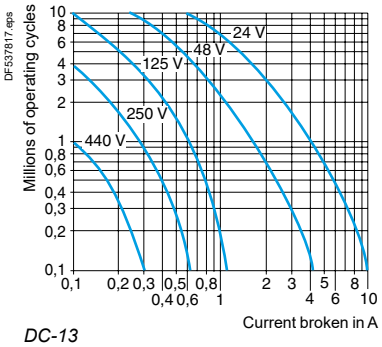

DC-13

d.c. supply, category DC-13

Electrical durability (valid for up to 1200 operating cycles/hour) on an inductive load such as the coil of an electromagnet, without economy resistor, the time constant increasing with the load.

Operating cycles	V	24	48	125	250	440
1 million	**W**	96	76	76	76	44
3 million	**W**	48	38	38	32	–
10 million	**W**	14	12	12	–	–

Ref.
Contactors

Characteristics

Environment

Contact block type (not dust/damp protected)				LADN or LADC	LADT and LADS	LADR	LAD8	LADN●●R
Conforming to standards				IEC/EN 60947-5-1, UL 60947-5-1, CSA C22.2 n° 60947-5-1, GB/T 14048.5				
Product certifications				UL, CSA, CCC, EAC, UKCA, CB certification				
Degree of protection	Conforming to IEC 60529			Protection against direct finger contact IP 2X				
Ambient air temperature around the device	Storage		°C	-60…+80				
	Operation		°C	-5…+60				-25…+70 (1)
Maximum operating altitude	Without derating		m	3000				
Connection by cable	Phillips n° 2 and Ø6 mm Flexible or solid cable with or without cable end		mm²	Min: 1 x 1; Max: 2 x 2.5				Max: 2 x 2.5
Tightening torque			N.m	1.7				
Spring terminal connections	Flexible or solid cable without cable end		mm²	Max: 2 x 2.5				

Instantaneous and time delay contact characteristics

Number of contacts				1, 2 or 4	2	2	2	2 or 4
Rated operational voltage (Ue)	Up to		V	690				
Rated insulation voltage (Ui)	Conforming to IEC 60947-5-1		V	690				
	Conforming to UL, CSA		V	600				
Conventional thermal current (Ith)	For ambient temperature ≤ 60 °C		A	10				
Frequency of the operational current			Hz	25…400				
Minimum switching capacity		U min	V	17				
		I min	mA	5				1
Short-circuit protection	Conforming to IEC 60947-5-1 gG fuse		A	10				
Rated making capacity	Conforming to IEC 60947-5-1	I rms	A	∼: 140; ⎓: 250				
Short-time rating	Permissible for	1 s	A	100				
		500 ms	A	120				
		100 ms	A	140				
Insulation resistance			MΩ	> 10				
Non-overlap time	Guaranteed between N/C and N/O contacts		ms	1.5 (on energisation and on de-energisation)				
Overlap time	Guaranteed between N/C and N/O contacts on LADC22		ms	1.5	–	–	–	–
Time delay (LADT, R and S contact blocks) Accuracy only valid for setting range indicated on the front face	Ambient air temperature for operation		°C	–	-40…+70	-40…+70	–	–
	Repeat accuracy			–	±2 %	±2 %	–	–
	Drift up to 0.5 million operating cycles			–	+15 %	+15 %	–	–
	Drift depending on ambient air temperature			–	0.25 % per °C	0.25 % per °C	–	–
Mechanical durability	In millions of operating cycles			30	5	5	30	30
Operational power of contacts				See page B8/94				See page B8/95
Degree of pollution				IP20				IP50 (2)

(1) NC on-delay up to 200 ms under extreme low temperature: -40 to -25 °C.
(2) IP50 for the contacts only, after installed on contactor.

Ref.
Contactors

Characteristics

Environment

Contact block type (dust/damp protected)				LA1DX	LA1DZ (4 contacts: 2 protected + 2 non protected)		LA1DY
				Protected	Protected	Non protected	Protected
Conforming to standards				IEC/EN 60947-5-1, UL 60947-5-1, CSA C22.2 n° 60947-5-1, GB/T 14048.5			
Product certifications				UL, CSA, CCC, EAC, UKCA, CB certification			
Degree of protection	Conforming to IEC 60529			Protection against direct finger contact IP 2X			
Ambient air temperature	Storage and operation		**°C**	-25…+70			
Cabling	Phillips n° 2 and Ø6 mm Flexible or solid conductor with or without cable end		**mm²**	Min: 1 x 1; max: 2 x 2.5			
Tightening torque			**N.m**	1.7			
Number of contacts				2	2	2	2

Contact characteristics

Rated operational voltage (Ue)	Up to		**Vac**	125	125	690	125
			Vdc	30	30		30
Rated insulation voltage (Ui)	Conforming to IEC 60947-5-1		**V**	250	250	690	250
	Conforming to UL, CSA		**V**	–	–	600	–
Conventional thermal current (Ith)	For ambient temperature ≤ 40 °C		**A**	–	–	10	–
Maximum operational current (Ie)			**mA**	100	100	–	100
Frequency of the operational current			**Hz**	–	–	25…400	–
Minimum switching capacity		U min	**V**	5	5	17	5
		I min	**mA**	1	1	5	1
Short-circuit protection	Conforming to IEC 609475-1 gG fuse		**A**	–	–	10	–
Rated making capacity	Conforming to IEC 609475-1	I rms	**A**	–	–	∿:140; ⎓: 250	–
Short-time rating	Permissible for	1 s	**A**	–	–	100	–
		500 ms	**A**	–	–	120	–
		100 ms	**A**	–	–	140	–
Insulation resistance			**MΩ**	> 10	> 10	> 10	> 10
Mechanical durability	In millions of operating cycles			5	5	30	5
Materials and technology used for dust and damp protected contacts				Gold alloy - Single break	Gold alloy - Single break	–	Gold alloy - Single break with crossed bars

References:
page B8/37

Dimensions:
pages B8/99 and B8/100

Schemes:
pages B8/106 and B8/107

Rated operational power of not dust/damp protected contacts (conforming to IEC 60947-5-1)

a.c. supply, categories AC-14 and AC-15

Electrical durability (valid for up to 3600 operating cycles/hour) on an inductive load such as the coil of an electromagnet: making current (cos φ 0.7) = 10 times the power broken (cos φ 0.4).

Operating cycles	V	24	48	115	230	400	440	600
1 million	VA	60	120	280	560	960	1050	1440
3 million	VA	16	32	80	160	280	300	420
10 million	VA	4	8	20	40	70	80	100

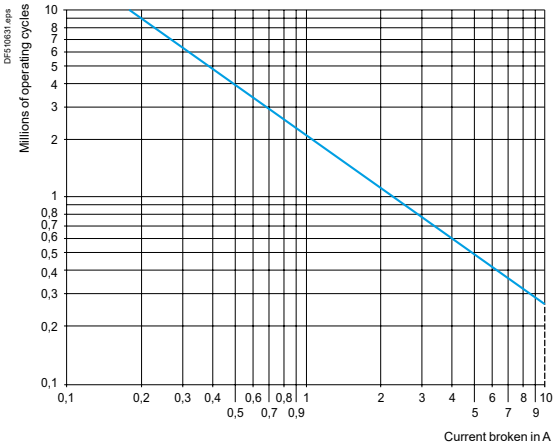

d.c. supply, category DC-13

Electrical durability (valid for up to 1200 operating cycles/hour) on an inductive load such as the coil of an electromagnet, without economy resistor, the time constant increasing with the load.

Operating cycles	V	24	48	125	250	440
1 million	W	96	76	76	76	44
3 million	W	48	38	38	32	–
10 million	W	14	12	12	–	–

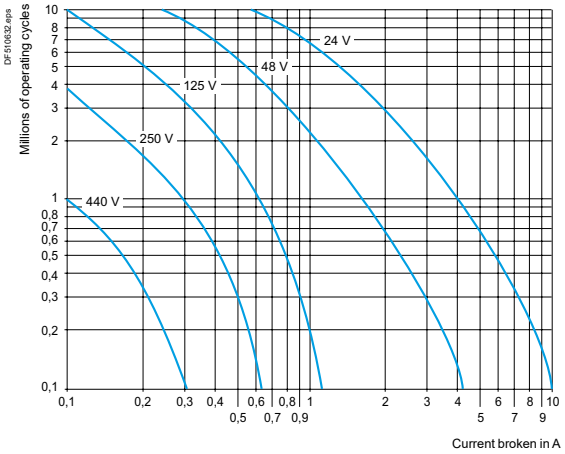

Ref.
Contactors

LADN...R Rated operational power of not dust/damp protected contacts (conforming to IEC 60947-5-1)

a.c. supply, categories AC-14 and AC-15

Electrical durability (valid for up to 3600 operating cycles/hour when current less than 1A, up to 1800 operation cycles/hour when current more than 1A) on an inductive load such as the coil of an electromagnet: making current (cos ϕ 0.7) = 10 times the power broken (cos ϕ 0.4) same with LADN

Operating cycles	V	24	48	115	230	400	440	600
1 million	VA	60	120	280	560	800	880	1200
2 million	VA	20	40	92	184	320	352	480
3 million	VA	16	32	80	160	280	300	420

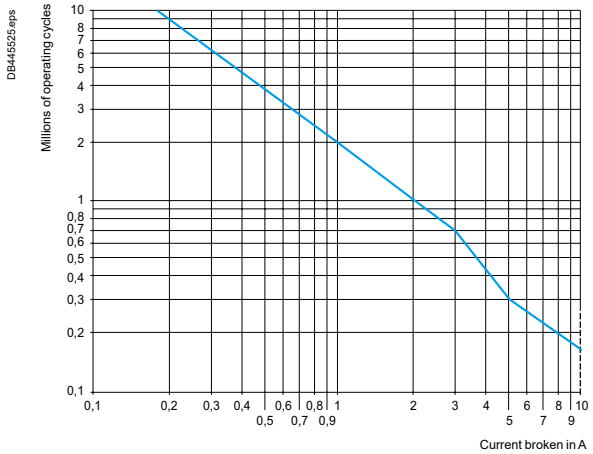

d.c. supply, category DC-13

Electrical durability (valid for up to 1200 operating cycles/hour) on an inductive load such as the coil of an electromagnet, without economy resistor, the time constant increasing with the load.

Operating cycles	V	24	48	125	250	440
0.5 million	W	96	100	95	110	70
1 million	W	54	60	60	60	44
2 million	W	34	36	38	38	–
3 million	W	24	24	25	25	–

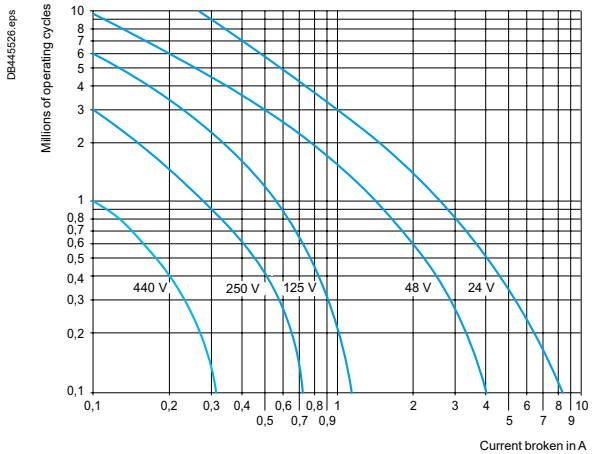

Ref.
Contactors

Characteristics

Environment

Conforming to standards			IEC/EN 60947-5-1, UL 60947-5-1, CSA C22.2 n° 60947-5-1, GB/T 14048.5
Product certifications			UL, CSA
Degree of protection	Conforming to IEC 60529		Protection against direct finger contact IP 2X
Ambient air temperature around the device	Storage	**°C**	-40…+80
	Operation	**°C**	-25…+55
	Permissible for operation at Uc	**°C**	-25…+70

Suppressor modules Deca contactors

Module type			**LA4DA, LAD4RC, LAD4RC3**	**LA4DB, LAD4T, LAD4T3**	**LA4DC, LAD4D3**	**LA4DE, LAD4V, LAD4V3**
Type of protection			RC circuit	Bidirectional peak limiting diode	Diode	Varistor
Rated control circuit voltage (Uc)		**V**	∿ 24…415	∿ or ⎓ 24…440	⎓ 12…250	∿ or ⎓ 24…250
Maximum peak voltage			3 Uc	2 Uc	Uc	2 Uc
Natural RC frequency	24/48 V	**Hz**	400	–	–	–
	50/127 V	**Hz**	200	–	–	–
	110/240 V	**Hz**	100	–	–	–
	380/415 V	**Hz**	150	–	–	–

Mechanical latch blocks (1) Deca, Deca Advanced contactors

Mechanical latch block type			**LAD6K10** (2)	**LA6DK20**
For use on contactor			**LC1D09…D80A DT20…DT80A**	**LC1D80…D150 LP1D80 and LC1D115**
Product certifications			UL, CSA	UL, CSA
Rated insulation voltage	Conforming to IEC 60947-5-1	**V**	690	690
Rated control circuit voltage	∿ 50/60 Hz and ⎓	**V**	24…415	24…415
Power required	For unlatching ∿	**VA**	25	25
	⎓	**W**	30	30
Maximum operating rate	In operating cycles/hour		1200	1200
On-load factor			10 %	10 %
Mechanical durability at Uc	In millions of operating cycles		0.5	0.5

(1) Unlatching can be manually operated or electrically controlled (pulsed).
*The **LA6DK** or **LAD6K** latch coil and the **LC1D** operating coil must not be energised simultaneously.*
*The duration of the **LA6DK** or **LAD6K** and **LC1D** control signals must be ⩾ 100 ms.*
(2) LAD8N side mounted auxiliary contact blocks cannot be used with Deca Advanced contactors (LC1D40A....LC1D80A), when mounted with LAD6K mechanical latch block.

References:
pages B8/39 and B8/40
Dimensions:
pages B8/99 and B8/100
Schemes:
page B8/107

Environment Deca, Deca Advanced contactors

Module type			**LA4DT** (On-delay)
Conforming to standards			IEC 60255-5
Product certifications			UL, CSA
Degree of protection	Conforming to IEC 60529		Protection against direct finger contact IP 2X
Ambient air temperature around the device	Storage	**°C**	-40…+80
	Operation	**°C**	-25…+55
	For operation at Uc	**°C**	-25…+70
Rated insulation voltage (Ui)	Conforming to IEC 60947-1	**V**	250
Cabling	Phillips n° 2 and Ø6 mm Flexible or solid conductor with or without cable end	**mm²**	Min: 1 x 1; max: 2 x 2.5
Tightening torque		**N.m**	1.7

Control circuit characteristics

Built-in protection	Of the input		By varistor
	Contactor coil suppression		By varistor
Rated control circuit voltage (Uc)		**V**	∼ or ⎓: 24…250
Permissible variation			0.8…1.1 Uc
Type of control			By mechanical contact only

Timing characteristics

Timing ranges		**s**	0.1…2; 1.5…30; 25…500
Repeat accuracy	0…40 °C		±3 % (10 ms minimum)
Reset time	During time delay period	**ms**	150
	After time delay period	**ms**	50
Immunity to microbreaks	During time delay period	**ms**	10
	After time delay period	**ms**	2
Minimum control pulse duration		**ms**	–
Time delay signalling	By LED		Illuminates during time delay period

Switching characteristics (solid state type)

Maximum power dissipated		**W**	2
Leakage current		**mA**	< 5
Residual voltage		**V**	3.3
Overvoltage protection			3 kV; 0.5 joule
Electrical durability	In millions of operating cycles		30

Function diagram

Electronic on-delay timer LA4DT

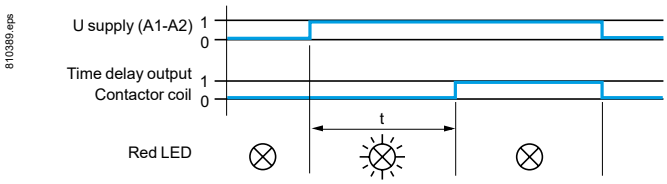

References:
page B8/43

Dimensions:
pages B8/99 and B8/100

Schemes:
page B8/107

Characteristics

Environment Deca, Deca Advanced contactors

Conforming to standards			IEC 60255-5
Product certifications			UL, CSA
Degree of protection	Conforming to IEC 60529		Protection against direct finger contact IP 2X
Ambient air temperature around the device	Storage	**°C**	-40…+80
	Operation	**°C**	-25…+55
	Permissible for operation at Uc	**°C**	-25…+70

Other characteristics

Module type				**LA4DFB for Deca contactors** With relay	**LA4DWB for Deca, Deca Advanced contactors** Solid state
Conventional thermal current (Ith)	For ambient temperature ≤ 50 °C		**A**	8	
Rated insulation voltage	Conforming to IEC 60947-5-1		**V**	250	
Rated operational voltage	Conforming to IEC 60947-5-1		**V**	250	
Indication of input state				By integral LED which illuminates when the contactor coil is energised	
Input signals	Control voltage (E1-E2)		**V**	⎓ 24	⎓ 24
	Permissible variation		**V**	17…30	5…30
	Current consumption at 20 °C		**mA**	25	8.5 for 5 V 15 for 24 V
	State “0” guaranteed for	U	**V**	< 2.4	< 2.4
		I	**mA**	< 2	< 2
	State “1” guaranteed for	U	**V**	17	5
Built-in protection	Against reversed polarity			By diode	By diode
	Of the input			By diode	By diode
Electrical durability at 220 A/240 V	In millions of operating cycles			10	20
Maximum immunity to microbreaks			**ms**	4	1
Power dissipated	At 20 °C		**W**	0.6	0.4
Direct mounting on contactor	With coil	∼ 24…250 V		**LC1D80…D150**	–
		∼ 100…250 V		–	**LC1D80…D115**
		∼ 380…415 V		–	–
Mounting with cabling adapter LAD4BB	With coil	∼ 24…250 V		**LC1D09…D38, LC1DT20…DT40**	**LC1D09…D38, LC1DT20…DT40**
		∼ 380…415 V		–	–
Mounting with cabling adapter LAD4BB3	With coil	∼ 24…250 V		**LC1D40A…D80A**	**LC1D40A…D80A**
		∼ 380…415 V		**LC1D40A…D80A**	**LC1D40A…D80A**

Total operating time at Uc (of the contactor)	The operating times depend on the type of contactor electromagnet and its control mode. The closing time "C" is measured from the moment the coil supply is switched on to initial contact of the main poles. The opening time "O" is measured from the moment the coil supply is switched off to the moment the main poles separate.							
				LC1D09… D38, LC1DT20… DT40	**LC1D40A… D80A**	**LC1D80 and D95**	**LC1D115**	**LC1D150**
	With **LA4DFB**	"C"	**ms**	20…30	28…34	28…43	28...58	28...43
		“O”	**ms**	16…24	20…24	18…32	18...32	52...87

Cabling	Phillips n° 2 and Ø6 mm Flexible or solid cable with or without cable end	**mm²**	Min: 1 x 1; max: 2 x 2.5
Tightening torque		**N.m**	1.7

References:
page B8/43

Dimensions:
pages B8/99 and B8/100

Schemes:
page B8/107

Life Is On Schneider Electric

Dimensions

LC1D09…D18 (3-pole)

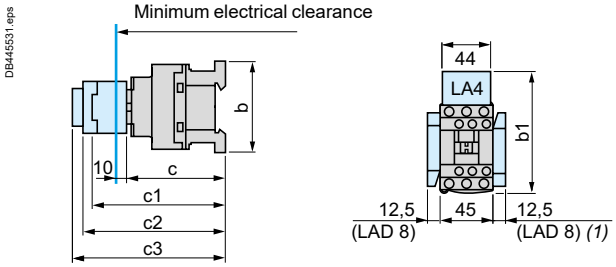

LC1D25…D38 (3-pole), **LC1DT20…DT40** (4-pole)

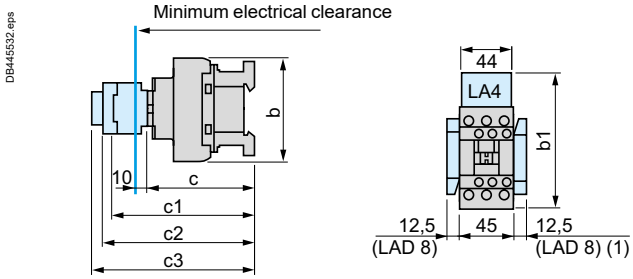

LC1		D09…D18	D093…D123	D099…D129	D25…D38	D183…D323	D098, D128, DT20 and DT25	DT203 and DT253	DT32 and DT40 D188…D258	D1883, D2583, DT323 and DT403
b	without add-on blocks	77	99	80	85	99	85	99	91	105
b1	with LAD4BB	94	107	95,5	98	107	98	–	–	–
	with LA4D●2	110 (1)	123 (1)	111.5 (1)	114 (1)	123 (1)	114	–	–	–
	with LA4DF, DT	119 (1)	132 (1)	120.5 (1)	123 (1)	132 (1)	129	–	–	–
	with LA4DW, DL	126 (1)	139 (1)	127.5 (1)	130 (1)	139 (1)	190	–	–	–
c	without cover or add-on blocks	84	84	84	90	90	90	90	97	97
	with cover, without add-on blocks	86	86	86	92	92	92	92	99	99
c1	with LADN or C (2 or 4 contacts)	117	117	117	123	123	123	123	131	131
c2	with LAD6K10	129	129	129	135	135	135	135	143	143
c3	with LADT, R, S	137	137	137	143	143	143	143	151	151
	with LADT, R, S and sealing cover	141	141	141	147	147	147	147	155	155
	with LADN●●R (2 or 4 contacts)	120	120	120	126	126	126	126	134	134

*(1) Including **LAD4BB**.*

LC1D40A…D80A (3-pole), **LC1DT60A…DT80A** (4-pole)

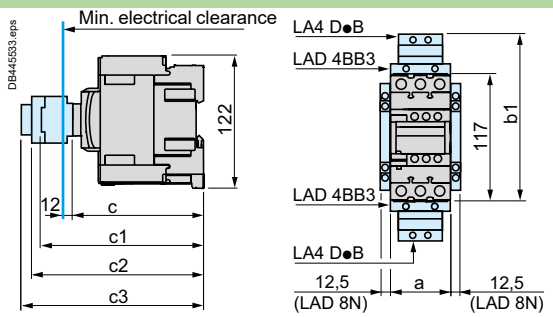

LC1D80 and **D95** (3-pole), **LC1D80004** and **D80008** (4-pole), **D40008** and **D65008** (4-pole)

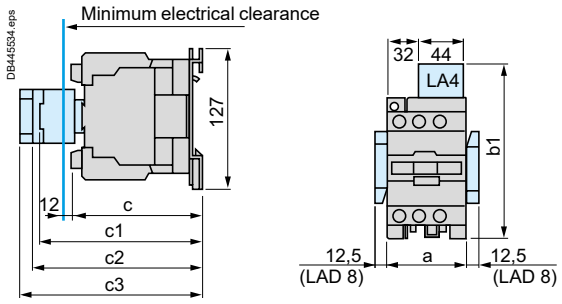

LC1		D40A…D80A	DT60A…DT80A	D40008	D80	D95, D65008	D80004	D80008
a		55	70	85	85	85	96	96
b1	with LA4D●2	–	–	135	135	135	135	135
	with LA4DB3 or LAD4BB3	136	–	–	135	–	–	–
	with LA4DF, DT	157	–	142	142	142	142	142
	with LA4DM, DW, DL	166	–	150	150	150	150	150
c	without cover or add-on blocks	118	118	125	125	125	125	140
	with cover, without add-on blocks	120	120	–	130	130	–	–
c1	with LADN (1 contact)	–	–	139	150	150	150	150
	with LADN or C (2 or 4 contacts)	150	150	147	158	158	158	158
c2	with LAD6K10 or LA6DK	163	163	159	170	170	170	170
c3	with LADT, R, S	171	171	167	178	178	178	178
	with LADT, R, S and sealing cover	175	175	171	182	182	182	182
	with LADN●●R (2 or 4 contacts)	153	153	150	161	161	161	161

LC1D115 and **D150** (3-pole), **LC1D115004** (4-pole)

LC1		D115, D150	D115004	D1150046
a		120	150	155
b1	with LA4DA2	174	174	174
	with LA4DF, DT	185	185	185
	with LA4DM, DL	188	188	188
	with LA4DW	188	188	188
c	without cover or add-on blocks	132	132	115
	with cover, without add-on blocks	136	–	–
c1	with LADN or C (2 or 4 contacts)	150	150	150
c2	with LA6DK20	155	155	155
c3	with LADT, R, S	168	168	168
	with LADT, R, S and sealing cover	172	172	172
	with LADN●●R (2 or 4 contacts)	153	153	153

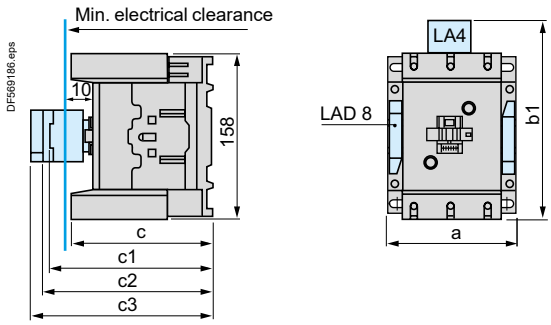

References:
pages B8/23 to B8/29
Characteristics:
pages B8/84 to B8/91
Schemes:
pages B8/106 and B8/107

Dimensions

LC1D09…D18 (3-pole)

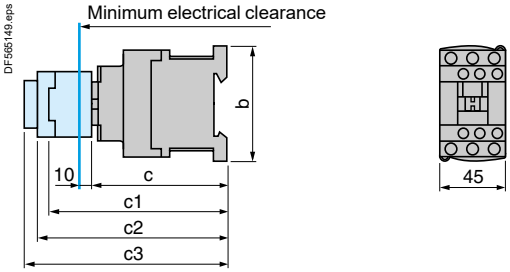

LC1D25…D38 (3-pole)

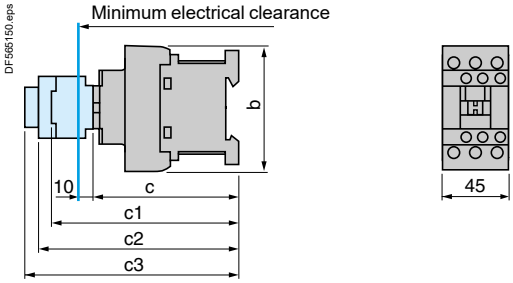

LC1		D09…D18	D093…D123	D099…D129	D25…D38	D183…D323
b		77	99	80	85	99
c	without cover or add-on blocks	93	93	93	99	99
	with cover, without add-on blocks	95	95	95	101	101
c1	with LADN or C (2 or 4 contacts)	126	126	126	132	132
c2	with LAD6K10	138	138	138	144	144
c3	with LADT, R, S	146	146	146	152	152
	with LADT, R, S and sealing cover	150	150	150	156	156

LC1DT20…DT40 (4-pole)

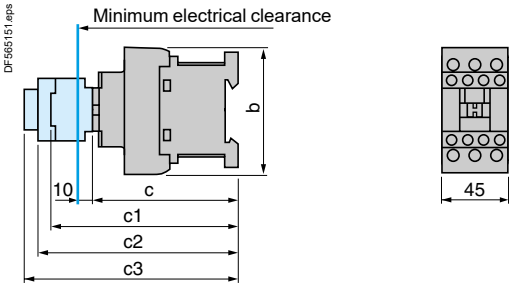

LC1		DT20 and DT25 D098 and D128	DT203 and DT253 D0983 and D1283	DT32 and DT40 D188…D258	DT323 and DT403 D1883 and D2583
b		85	99	91	105
c	with cover	102	102	107	107
c1	with LADN or C (2 or 4 contacts)	133	133	138	138
c2	with LAD6K10	145	145	150	150
c3	with LADT, R, S	153	153	158	158
	with LADT, R, S and sealing cover	157	157	162	162

LC1D40A…D80A (3-pole), **LC1DT60A…DT80A** (4-pole)

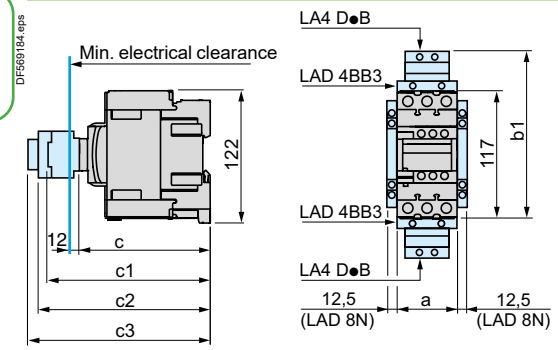

LC1D80 and **D95** (3-pole), **LP1D80004, LP1D80008** (4-pole), **LP1D40008** and **D65008** (4-pole)

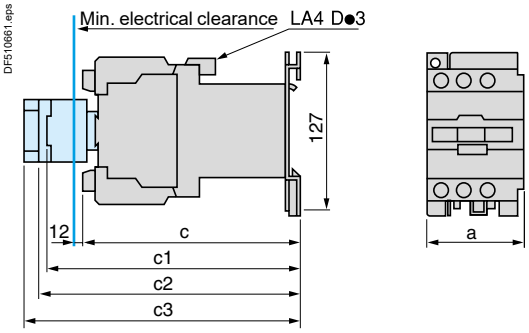

		LC1D40A … D80A	LC1 DT60A…DT80A	LP1D40008 and D65008	LC1 D80 and D95	LP1D80004	LP1D80008
a		55	72	85	85	96	96
b1	with LAD4BB3	136	136	–	–	–	–
	with LA4DF, DT	157	157	–	–	–	–
c	without cover or add-on blocks	118	118	182	181	181	196
	with cover, without add-on blocks	120	120	–	186	–	–
c1	with LADN (1 contact)	–	–	196	204	204	204
	with LADN or C (2 or 4 contacts)	150	150	202	210	210	210
c2	with LAD6K10 or LA6DK20	163	163	213	221	221	221
c3	with LADT, R, S	171	171	221	229	229	229
	with LADT, R, S and sealing cover	175	175	225	233	233	233

LC1D115●●● and **LC1D150●●●** with ⎓ coil: see page B8/99.

References:
pages B8/23 to B8/29
Characteristics:
pages B8/84 to B8/91
Schemes:
pages B8/106 and B8/107

Mounting

LC1D09…D38, DT20…DT40

On mounting rail NSYSDR200B, NSYSDR200BD or NSYSDR200 (width 35 mm)

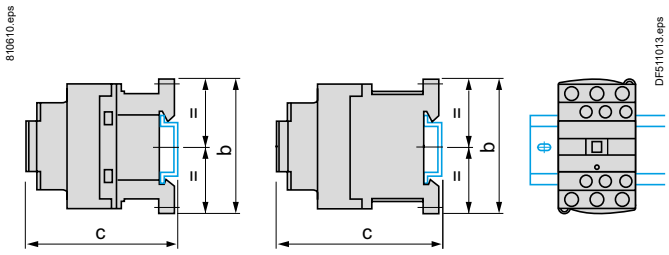

LC1D40A…D80A, LC1DT60A and DT80A, LC1D80 and D95, LC1D40008 and D65008

On mounting rail AM1DL201 (width 75 mm) [2]
On mounting rail NSSDPR●● or NSYSDR200 (width 35 mm)

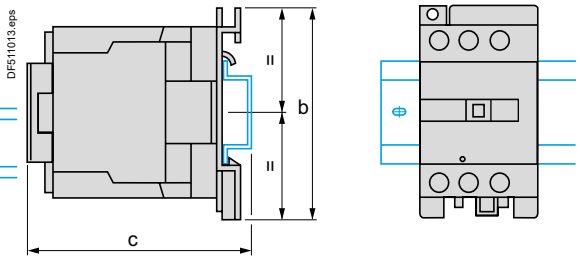

Control circuit: a.c.				
LC1	**D09… D18**	**D25… D38**	**DT20 and DT25**	**DT32 and DT40**
b	77	85	85	100
c (NSYSDR200B or NSYSDR200BD) [1]	88	94	94	101
c (NSYSDR200) [1]	96	102	102	109

Control circuit: a.c.			
LC1	**D40A…D80A DT60A…DT80A**	**D80 and D95**	**D40008 and D65008**
b	122	127	127
c	–	147	143
c (AM1DL201) [1]	–	137	133
c (NSSDPR●● or NSYSDR200 [1]	128	137	133

Control circuit: d.c.				
LC1	**D09… D18**	**D25… D38**	**DT20 and DT25**	**DT32 and DT40**
b	77	85	85	109
c (NSYSDR200B or NSYSDR200BD) [1]	97	103	104	118
c (NSYSDR200) [1]	105	110	111	126

Control circuit: d.c.			
LC1	**D40A…D80A DT60A…DT80A**	**D80 and D95**	**D40008 and D65008**
c	–	205	200
c (AM1DL201) [1]	–	195	190
c (NSSDPR●● or NSYSDR200) [1]	128	–	190

(1) With safety cover.
*(2) Except for **LC1D40A**…**D80A**, **LC1DT60A** and **DT80A**.*

LC1D80 and D95, LP1D80

On 2 mounting rails DZ5MB on 120 mm centres

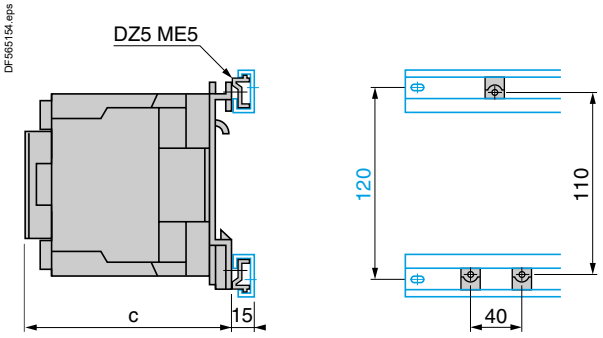

Control circuit: a.c.	
LC1	**D80 and D95**
c with cover	130

Control circuit: d.c. [3]	
LC1	**D80 and D95**
c with cover	186

LP1	**D80**
c	181

(3) Leave a 9 mm gap between 2 contactors if left on for more than 4 hours.

LC1D115, D150

On 2 mounting rails DZ5MB on 120 mm centres

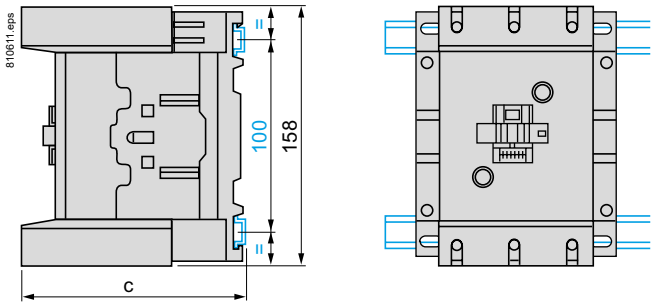

Control circuit: a.c. or d.c.		
LC1	**D115 and D150**	**D1156 and D1506**
c (NSYSDR200B or NSYSDR200BD)	134.5	117.5
c (NSYSDR200 or ED●●●)	142.5	125.5

References:
pages B8/23 to B8/29
Characteristics:
pages B8/84 to B8/91
Schemes:
pages B8/106 and B8/107

LC1D09…D38 and LC1DT20…DT40

On 2 mounting rails DZ5MB

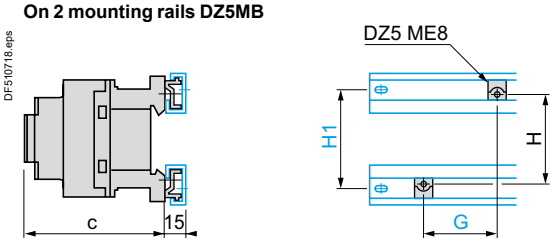

Control circuit:	a.c.		d.c.	
LC1	D09…D18	D25…D38	D09…D18	D25…D38
c with cover	86	92	95	101
G	35	35	35	35
H	60	60	70	70
H1	70	70	70	70
4-pole contactors				
LC1	DT20 and DT25	DT32 and DT40	DT20 and DT25	DT32 and DT40
c	92	99	102	107
G	35	35	35	35
H	60	60	70	70
H1	70	70	70	70

LC1D09…D38 and LC1DT20…DT40

On pre-slotted mounting plate AM1 PA, PB, PC

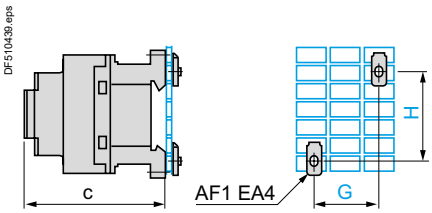

Control circuit:	a.c		d.c	
LC1	D09…D18	D25…D38	D09…D18	D25…D38
c with cover	86	92	95	101
G	35	35	35	35
H	60/70	60/70	70	70
LC1	DT20 and DT25	DT32 and DT40	DT20 and DT25	DT32 and DT40
c with cover	92	99	102	107
G	35	35	35	35
H	60	60	70	70

LC1D40A…D80A, LC1DT60A…DT80A

On pre-slotted mounting plate AM1 PA, PB, PC and panel mounted

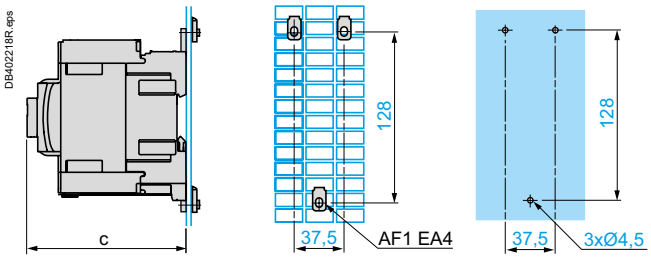

&

Control circuit:	a.c	d.c.
LC1	D40A…D80A , DT60A…DT80A	D40A…65A , DT60A…DT80A
c with cover	120	120

LC1D09…D38, LC1DT20…DT40

Panel mounted

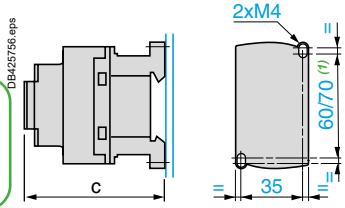

(1) for DC coil: 70 mm only.

Control circuit:	a.c		d.c	
LC1	D09…D18	D25…D38	D09…D18	D25…D38
c with cover	86	92	95	101
4-pole contactors				
LC1	DT20 and DT25	DT32 and DT40	DT20 and DT25	DT32 and DT40
c with cover	92	99	102	107

LC1D80 and D95, LC1D40008 and D65008, LP1D80

On pre-slotted mounting plate AM1 PA, PB, PC and panel mounted

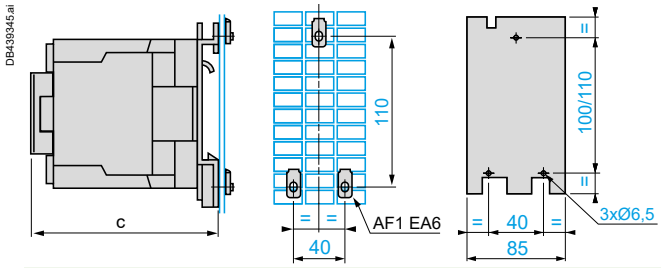

Control circuit:	a.c		d.c.
LC1	D80 and D95, D40008 and D65008		D80 and D95 D40008 and D65008
c with cover	130		186
LP1	–	–	D80
c without cover	–	–	181

LC1D115, D150

Panel mounted

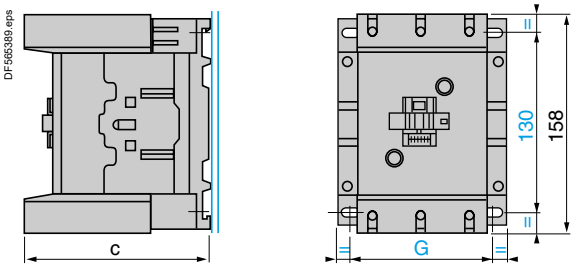

LC1	D115	D1156	D150	D1506
c	132	115	132	115
G (3-pole)	96/110	96/110	96/110	96/110
G (4-pole)	130/144	130/144	–	–

References:
pages B8/23 to B8/29
Characteristics:
pages B8/84 to B8/91
Schemes:
pages B8/106 and B8/107

Dimensions

LC1D09…D18 (3-pole), with AC/DC compatible coil

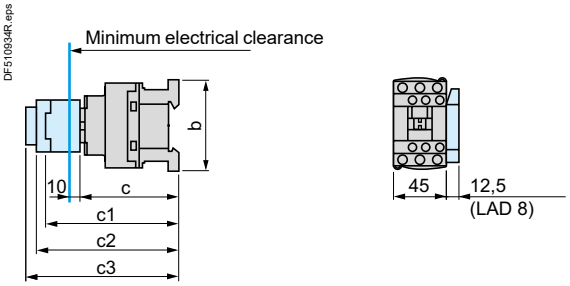

LC1D25…D38 (3-pole), with AC/DC compatible coil

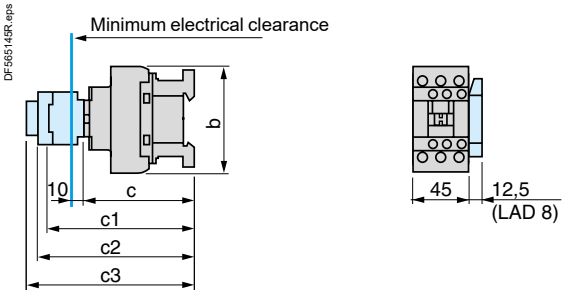

LC1		D09…D18	D25…D38
b	without add-on blocks	77	85
c	without cover or add-on blocks	84	90
	with cover, without add-on blocks	86	92
c1	with LADN or C (2 or 4 contacts)	117	123
c2	with LAD6K10	129	135
c3	with LADT, R, S	137	143
	with LADT, R, S and sealing cover	141	147

LC1D40A…D80A (3-pole), **LC1DT60A…DT80A** (4-pole), with AC/DC compatible coil

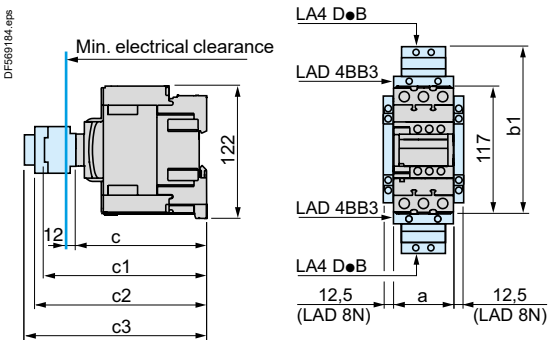

LC1		D40A…D80A	DT60A…DT80A
a		55	70
b1	LAD4BB3	136	–
	with LAD4DWB	166	–
c	without cover or add-on blocks	118	118
	with cover, without add-on blocks	120	120
c1	with LADN (1 contact)	–	–
	with LADN or C (2 or 4 contacts)	150	150
c2	with LAD6K10	163	163
c3	with LADT, R, S	171	171
	with LADT, R, S and sealing cover	175	175

References:
pages B8/19 to B8/21
Characteristics:
pages B8/84 to B8/91
Schemes:
pages B8/106 and B8/107

Mounting

LC1D09…D38 (3-pole),
with AC/DC compatible coil

On mounting rail NSYSDR200B, NSYSDR200BD or NSYSDR200 (width 35 mm)

810610.eps

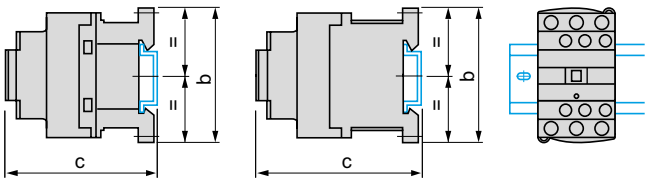

LC1	D09…D18	D25…D38
b	77	85
c (NSYSDR200B or NSYSDR200BD)	88	94
c (NSYSDR200)	96	102

LC1D40A…D80A (3-pole), **LC1DT60A** and **DT80A** (4-pole),
with AC/DC compatible coil

On mounting rail AM1DL201 (width 75 mm) (2)
On mounting rail NSSDPR●● or NSYSDR200 (width 35 mm)

DF511013.eps

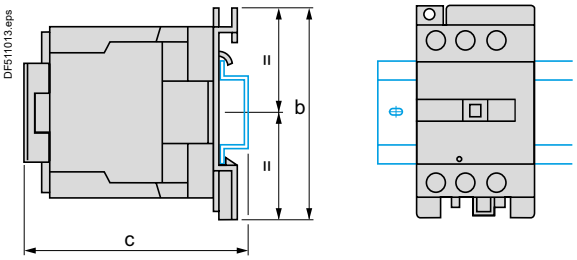

LC1	D40A…D80A DT60A…DT80A
b	122
c	–
c (AM1DL201)	–
c (NSSDPR●● or NSYSDR200)	128

Ref.

Contactors

Mounting

LC1D09…D38 (3-pole), with AC/DC compatible coil

On 2 mounting rails DZ5MB

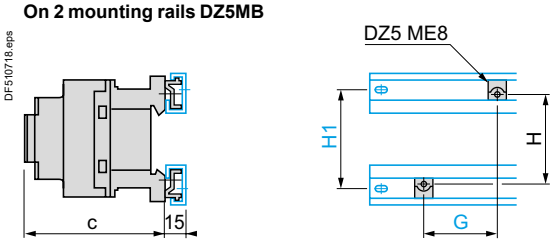

LC1	D09…D18	D25…D38
c with cover	86	92
G	35	35
H	60	60
H1	70	70

LC1D09…D38 (3-pole), with AC/DC compatible coil

On pre-slotted mounting plate AM1PA, PB, PC

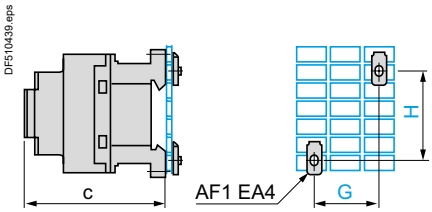

LC1	D09…D18	D25…D38
c with cover	86	92
G	35	35
H	60/70	60/70

LC1D09…D38 (3-pole), with AC/DC compatible coil

Panel mounted

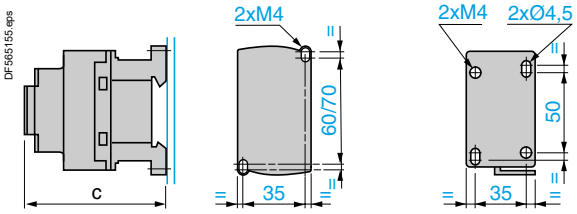

LC1	D09…D18	D25…D38
c with cover	86	92

LC1D40A…D80A (3-pole), **LC1DT60A…DT80A** (4-pole), with AC/DC compatible coil

On pre-slotted mounting plate AM1PA, PB, PC and panel mounted

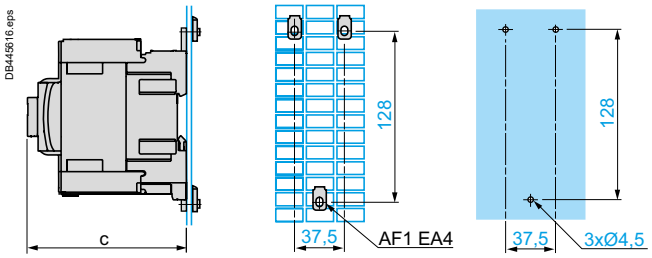

LC1	D40A…D80A , DT60A…DT80A
c with cover	120

Ref.
Contactors

Contactors

Deca, Deca Advanced 3-pole contactors (References: pages B8/19 to B8/26)

LC1D09 to D150

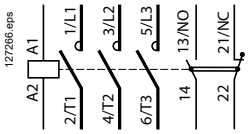

Deca 4-pole contactors (References: pages B8/27 and B8/28)

LC1DT20 to DT80A

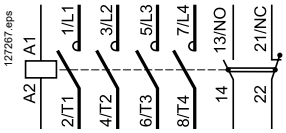

LC1D115004

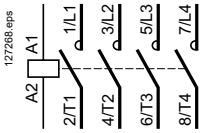

LC1D098 to D258

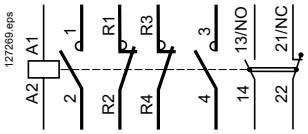

LC1 and LP1D40008 to D80008

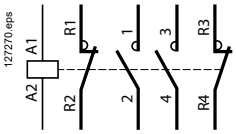

Front mounting add-on contact blocks

Instantaneous auxiliary contacts for Deca, Deca Advanced contactors (References: page B8/37)

1 N/O LADN10 (1)

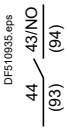

1 N/C LADN01 (1)

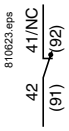

1 N/O + 1 N/C LADN11, LADN11R

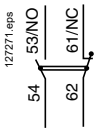

2 N/O LADN20, LADN20R

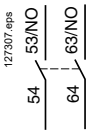

2 N/C LADN02

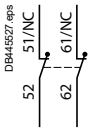

2 N/O + 2 N/C LADN22

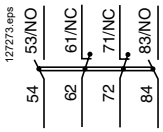

2 N/O + 2 N/C LADN22R

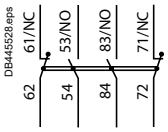

1 N/O + 3 N/C LADN13

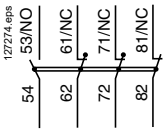

4 N/O LADN40, LADN40R

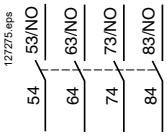

4 N/C LADN04

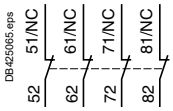

2 N/O + 2 N/C including 1 N/O + 1 N/C make before break LADC22

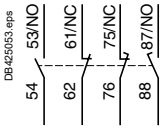

3 N/O + 1 N/C LADN31

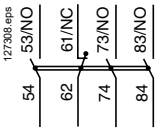

3 N/O + 1 N/C LADN31R

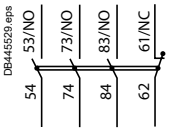

Instantaneous auxiliary contacts conforming to standard EN 50012 for Deca, Deca Advanced contactors (References: page B8/37)

1 N/O + 1 N/C LADN11G

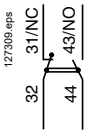

1 N/O + 1 N/C LADN11P

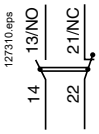

2 N/O + 2 N/C LADN22G

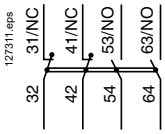

2 N/O + 2 N/C LADN22P

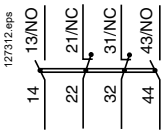

3 N/O + 1 N/C LADN31G

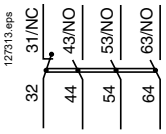

3 N/O + 1 N/C LADN31P

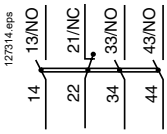

1 N/O + 3 N/C LADN13G

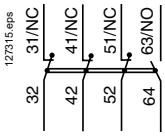

1 N/O + 3 N/C LADN13P

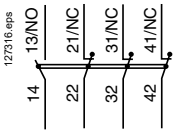

(1) Items in brackets refer to blocks mounted on right-hand side of contactor.

References:
pages B8/19 to B8/40

Characteristics:
pages B8/84 to B8/98

Dimensions:
pages B8/99 to B8/105

Life Is On Schneider Electric

Schemes

Front mounting add-on contact blocks for Deca, Deca Advanced contactors

Dust and damp protected instantaneous auxiliary contacts (References: page B8/37)

2 N/O (24-50 V) LA1DX20	2 N/C (24-50 V) LA1DX02	2 N/O (5-24V) with 2 cable screen terminals LA1DY20	2 N/O protected (24-50 V) 2 N/O standard LA1DZ40	2 N/O protected (24-50 V) + 1 N/O + 1 N/C standard LA1DZ31

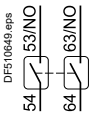

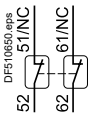

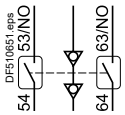

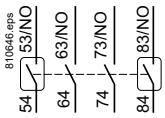

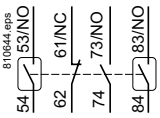

Time delay auxiliary contacts (References: page B8/39)

On-delay 1 N/O + 1 N/C LADT	Off-delay 1 N/O + 1 N/C LADR	On-delay 1 N/C + 1 N/O break before make LADS

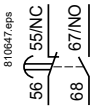

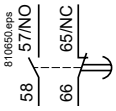

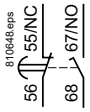

Mechanical latch blocks for Deca, Deca Advanced contactors (References: page B8/39)

LAD6K10 and LA6DK20

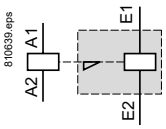

Side mounting add-on contact blocks for Deca, Deca Advanced contactors

Instantaneous auxiliary contacts (References: page B8/37)

1 N/O + 1 N/C LAD8N11 (1)	2 N/O LAD8N20 (1)	2 N/C LAD8N02 (1)

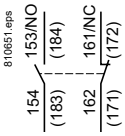

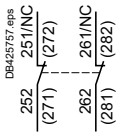

(1) Items in brackets refer to blocks mounted on right-hand side of contactor.

Electronic serial timer modules for Deca, Deca Advanced contactors

On-delay LA4DT•U

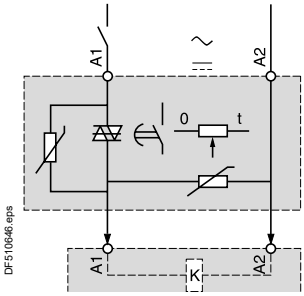

Interface modules

Relay output for Deca contactors

LA4DFB

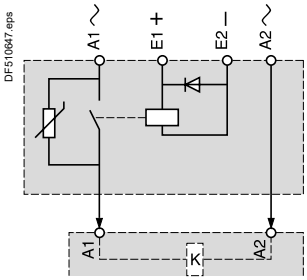

Solid state for Deca, Deca Advanced contactors

LA4DWB

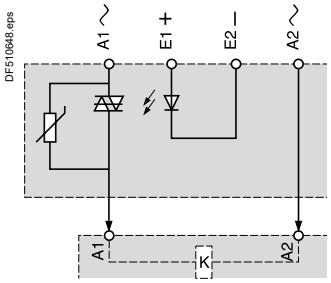

References: page B8/43.

Dimensions

LC2D09 to D38 Deca, Deca Advanced contactors

2 x **LC1D09 to D38**

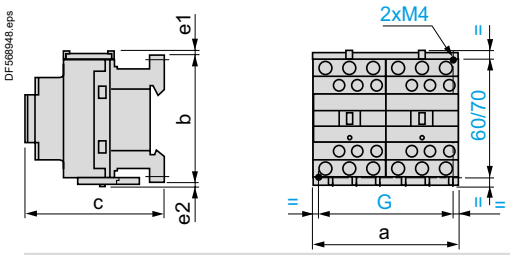

LC2 or 2 x LC1	a	b	c (1)	e1	e2	G
D09 to D18 AC, AC/DC	90	77	86	4	1.5	80
D093 to D123 AC	90	99	86	–	–	80
D09 to D18 DC	90	77	95	4	1.5	80
D093 to D123 DC	90	99	95	–	–	80
D25 to D38 AC, AC/DC	90	85	92	9	5	80
D183 to D383 AC	90	99	92	–	–	80
D25 to D32 DC	90	85	101	9	5	80
D183 to D383 DC	90	99	101	–	–	80

e1 and e2: including cabling.

(1) With safety cover, without add-on block.

LC2DT20 to DT40 Deca contactors

2 x **LC1DT20 to DT40**

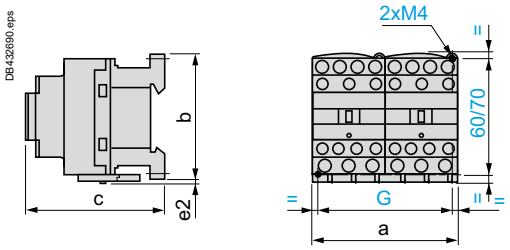

LC2 or 2 x LC1	a	b	c	G	e2
DT20 and DT25 AC	90	85	92	80	20
DT32 and DT40 AC	90	91	99	80	22
DT20 and DT25 DC	90	85	102	80	20
DT32 and DT40 DC	90	91	109	80	22

c, e: including cabling.

LC2D40A to D80A for Deca, Deca Advanced contactors

2 x **LC1D40A to D80A**

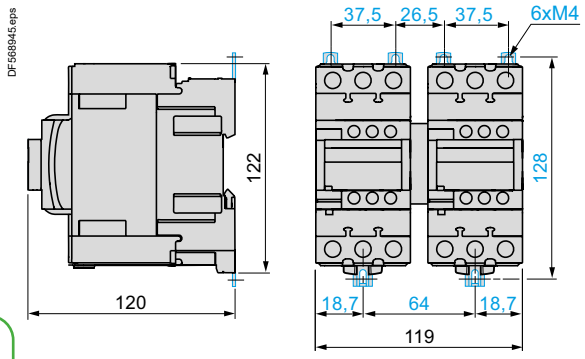

Dimensions

LC2D80 and D95

2 x **LC1D80 and D95** ∿

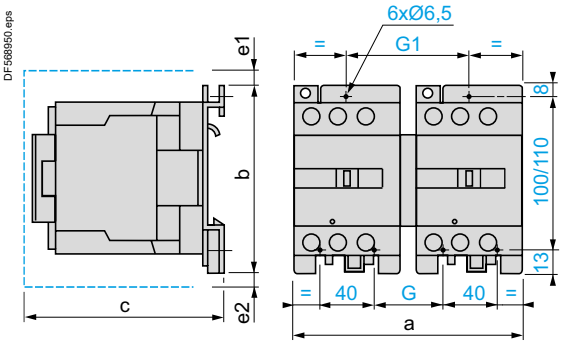

LC2 or 2 x **LC1**	a	b	c	e1	e2	G	G1
D80 and D95 ∿	182	127	158	13	–	56	96
D80004 ∿	207	127	158	–	20	71	111

c, e1 and e2: including cabling.

2 x **LC1D80 and D95** ⎓

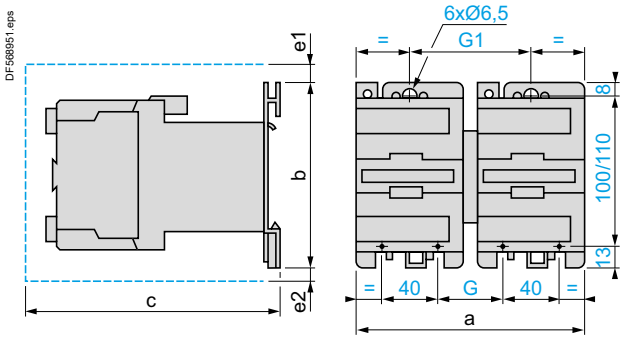

2 x **LC1**	a	b	c	e1	e2	G	G1
D80 and D95	182	127	215	13	20	56	96

c, e1 and e2: including cabling.

LC2D115 and D150

2 x **LC1D115 and D150**

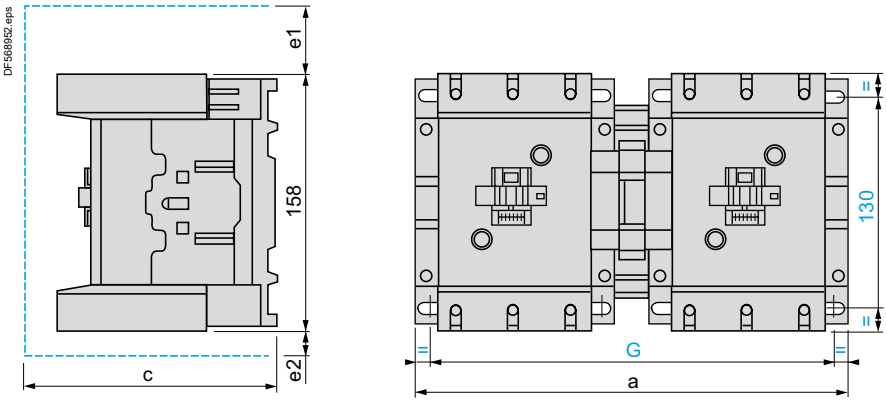

LC2 or 2 x **LC1**	a	c	e1	e2	G
D115 and D150	266	148	56	18	242/256
D115004	334	148	–	60	310/324

c, e1 and e2: including cabling.

Ref.
Contactors

Schemes

Reversing contactors for motor control

LC2D09...D80A Deca, Deca Advanced contactors LC2D80...D150 Deca contactor

Horizontally mounted

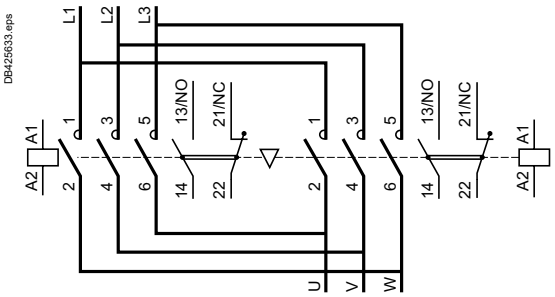

LAD9R1V D, Deca Advanced contactors

With integral electrical interlocking

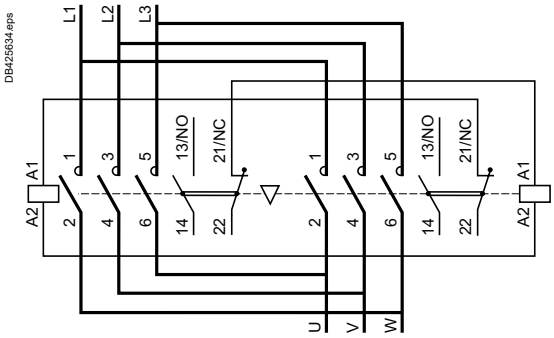

Changeover contactor pairs Deca contactors

LC2DT20…DT40

Horizontally mounted

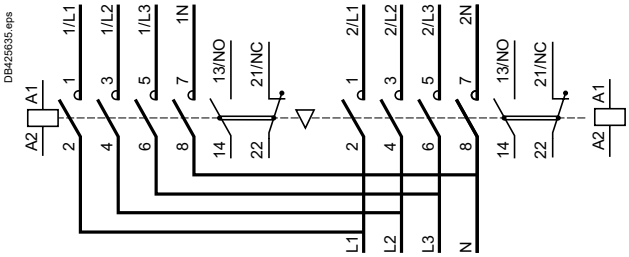

LADT9R1V

With integral electrical interlocking

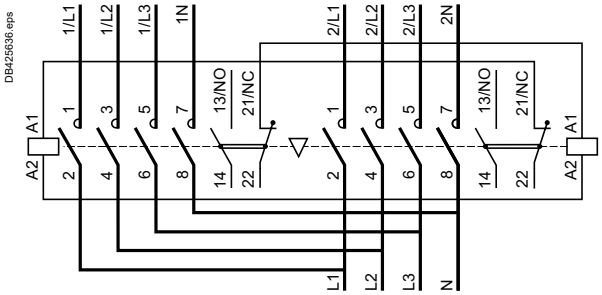

Ref.

Schemes

Electrical interlocking of Deca, Deca Advanced reversing contactors fitted with:

Mechanical interlock with integral electrical contacts
LA9D4002, LA9D8002 and LA9D11502

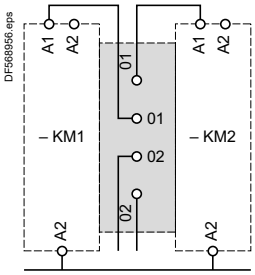

Mechanical interlock without integral electrical contacts
LAD9V2, LAD4CM, LA9D50978 and LA9D80978

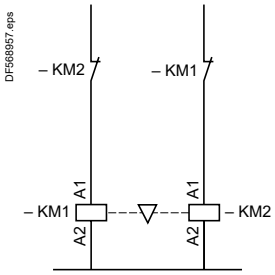

Low speed - High speed cabling kit, screw clamp terminals for LC1D09... D38 contactors (Deca, Deca Advanced)

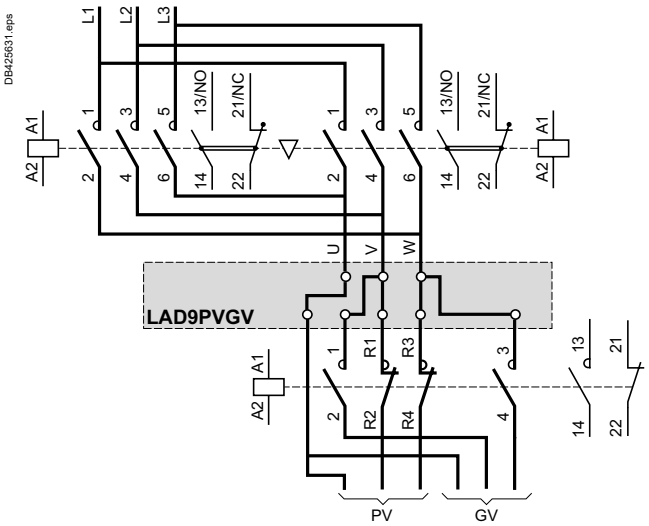

Low speed - High speed cabling kit, spring terminals for LC1D09... D38 contactors (Deca)

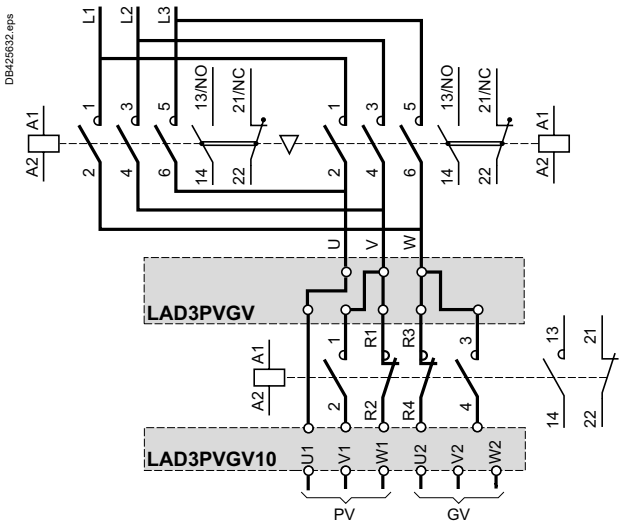

Ref.
Contactors

Dimensions and scheme

Dimensions

LC1DFK

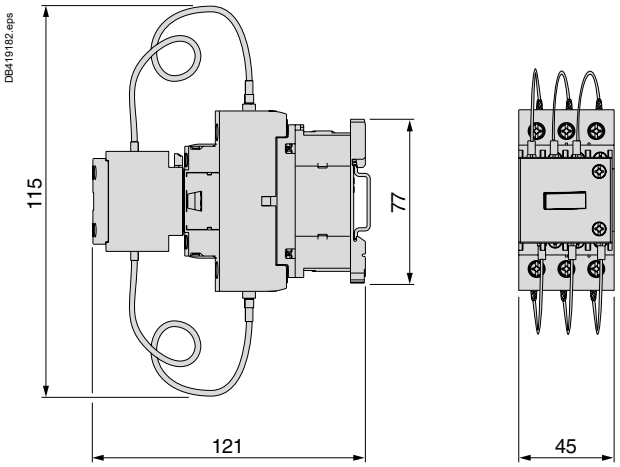

LC1DGK, DLK, DMK

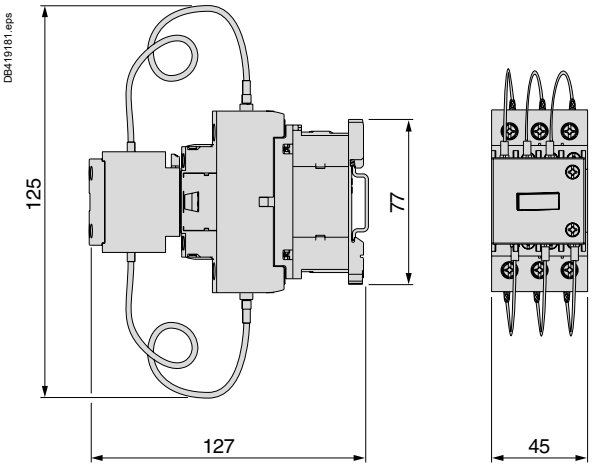

LC1DPK, DTK

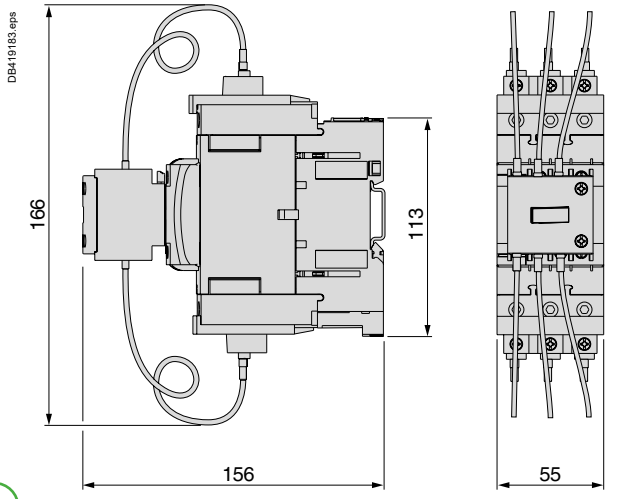

LC1DWK

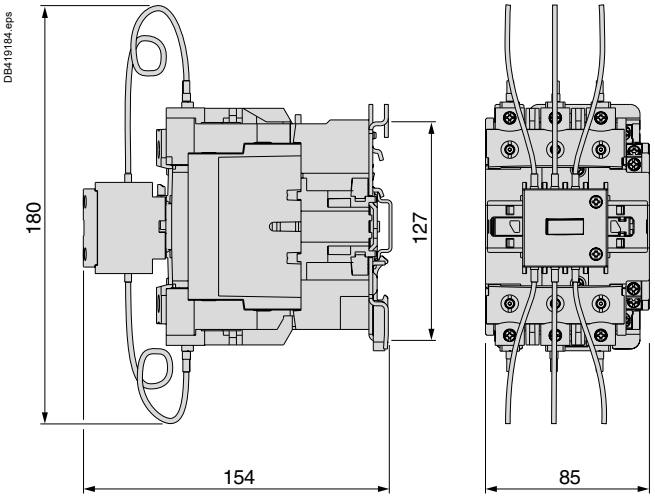

Scheme

LC1D●K

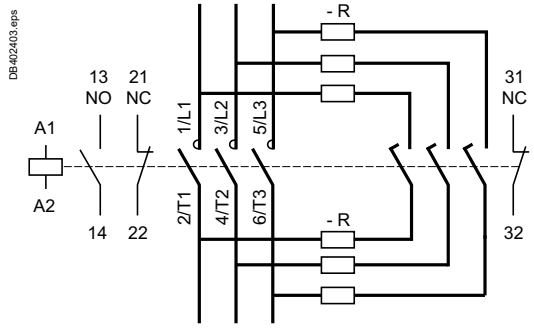

R = Pre-wired resistor connections.

References:
page B8/35

Characteristics

GC25

Modular contactors are designed for use in modular panels and enclosures.
These contactors feature:

■ **Easy installation:**
□ quick clip-on fixing and locking onto 35 mm omega rail
□ easy connection by means of ready-to-tighten, captive, pozidrive screw terminals.

■ **Compact size:**
All units have a common depth of 60 mm and width in modules of 17.5 mm (width of one module: 17.5 mm).

■ **User safety:**
□ use of materials conforming to strictest fire safety standards
□ live parts protected against direct finger contact
□ completely safe operation
□ state indication on front panel.

Standards

This range of modular contactors has been designed taking into account the requirements of international standard IEC 61095.
This standard is specific to “Electromagnetic contactors for domestic and similar use”.
It has very strict requirements, meeting the expectations of users, with regard to the safety of equipment and persons in “premises and areas accessible to the public”.
Conformity with this standard makes it possible to obtain the following quality labels without the need for additional tests: NF-USE, VDE, CEBEC, etc.

Applications

Modular contactors are designed for switching all single-phase, 3-phase or 4-phase loads up to 100 A.

Power switching

These contactors have multiple applications in industrial, agricultural and commercial premises, hospitals and the home, i.e. wherever switching of a specific supply is required:
■ lighting
■ heating
■ ventilation
■ motorised shutters or gates.

References:
page B8/54

Dimensions:
pages B8/120 to B8/121

Schemes:
page B8/122

Environment

Contactor type			GC16	GC25	GC40	GC63	GC100
Rated insulation voltage (Ui)	Conforming to IEC 61095	V	500				
	Conforming to VDE 0110	V	500				
Rated impulse withstand voltage (Uimp)		kV	4 in enclosure				
Conforming to standards			IEC 61095 and IEC 60947-5-1 for auxiliary contacts				
Degree of protection	Conforming to IEC 60529		Protection against direct finger contact (IP 20 open, IP 40 in enclosure)				
Ambient air temperature around the device	Storage	°C	-40…+70				
	Operation	°C	-5…+50 (0.85…1.1 Uc)				
Maximum operating altitude	Without derating	m	3000				
Operating positions	Without derating		±30° in relation to normal vertical mounting plane				
Shock resistance 1/2 sine wave = 10 ms Conforming to IEC/EN 60068-2-27	Contactor open		10 gn				
	Contactor closed		15 gn				
Vibration resistance 5…300 Hz Conforming to IEC/EN 60068-2-6	Contactor open		2 gn				
	Contactor closed		3 gn				
Flame resistance			Conforming to IEC 61095				

Pole characteristics

Number of poles			2, 3 or 4				
Rated operational current (Ie) (Ue ≤ 440 V)	In AC-7a (heating)	A	16	25	40	63	100
	In AC-7b (motor control)	A	5	8.5	15	25	–
Contactor rating	40 °C	A	16	25	40	63	100
	50 °C	A	14	22	36	57	87
	60 °C (1)	A	13	20	32	50	80
Rated operational voltage (Ue)	Up to	V	250 two-pole contactors, 415 three and four-pole contactors				
Frequency limits	Of the operating current	Hz	400				
Conventional thermal current (Ith)	θ ≤ 50 °C	A	16	25	40	63	100
Rated breaking and making capacity	Conforming to IEC 61095 (AC-7b) I rms 400 V 3-phase	A	40	68	120	200	–
Permissible short time rating no current flowing for preceding 15 minutes with q ≤ 40 °C	For 10 s	A	128	200	320	504	800
	For 30 s	A	40	62	100	157	250
Short-circuit protection by fuse or circuit breaker U ≤ 440 V	gl fuse	A	16	25	40	63	100
	Circuit breaker I²t (at 3 kA rms prospective) 230 V	A²s	5000	10000	16000	18000	–
	Circuit breaker I²t (at 3 kA rms prospective) 400 V	A²s	9000	14000	17500	20000	–
Electrical durability in operating cycles	AC-7a, AC-7b		100000	100000	100000	100000	30000
Average impedance per pole	At Ith and 50 Hz	mΩ	2.5	2.5	2	2	1
Power dissipated per pole	For the above operational currents	W	0.65	1.6	3.2	8	10
Maximum cabling c.s.a. Flexible cable without cable end	1 conductor	mm²	6	6	25	25	35
	2 conductors	mm²	4	4	16	16	–
Flexible cable with cable end	1 conductor	mm²	6	6	16	16	35
	2 conductors	mm²	1.5	1.5	4	4	–
Solid cable without cable end	1 conductor	mm²	6	6	25	25	35
	2 conductors	mm²	4	4	6	6	10
Tightening torque	Power circuit connections	N.m	0.8	0.8	3.5	3.5	3.5

(1) Ventilation 1/2 module must be fitted.

References: page B8/54
Dimensions, schemes: pages B8/120 to B8/122

Control circuit characteristics

Contactor type				GC16, GC25 single or 2-pole	GC16, GC25 3 or 4-pole GC40, GC63 2-pole	GC40, GC63 3 or 4-pole GC100 2-pole	GC100 4-pole
Rated control circuit voltage (Uc)		50 or 60 Hz	V	12…240 V, for other voltages, please consult your Regional Sales Office			
Control voltage limits (θ ≤ 50 °C)	50 Hz coils	Operational		0.85…1.1 Uc			
		Drop-out		0.2…0.75 Uc			
Average coil consumption at 20 °C and at Uc	∼ 50 Hz	Inrush	VA	15	34	53	106
		Sealed	VA	3.8	4.6	6.5	13
Maximum heat dissipation		50/60 Hz	W	1.3	1.6	2.1	4.2
Operating time		Closing "C"	ms	10…30			
		Opening "O"	ms	10…25			
Mechanical durability		In operating cycles		10^6			
Maximum operating rate at ambient temperature ≤ 50 °C		In operating cycles per hour		300			
Maximum cabling c.s.a.	Flexible cable without cable end	1 or 2 conductors	mm²	2.5			
	Flexible cable with cable end	1 conductor	mm²	2.5			
		2 conductors	mm²	1.5			
	Solid cable without cable end	1 or 2 conductors	mm²	1.5			
Tightening torque			N.m	0.8			

Instantaneous auxiliary contact characteristics

Rated operational voltage (Ue)	Up to	V	250
Rated insulation voltage (Ui)	Conforming to IEC 60947-5	V	500
	Conforming to VDE 0110	V	500
Conventional thermal current (Ith)	For ambient θ ≤ 50 °C	A	5
Mechanical durability	Operating cycles		10^6
Maximum cabling c.s.a.	Flexible or solid conductor	mm²	2.5
Tightening torque		N.m	0.8

References:
page B8/54

Dimensions, schemes:
pages B8/120 to B8/122

Characteristics in lighting applications

Lighting (Maximum number of lamps depending on the power of each unit) Introduction of installations according to type of supply

■ Single-phase circuit, 230 V

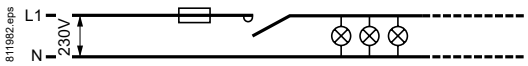

■ 3-phase circuit, 230 V

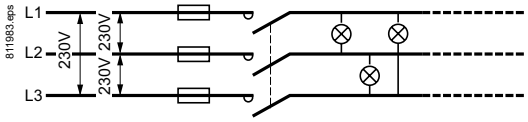

The maximum number of lamps which can be operated per phase is equal to the number of lamps in the “single phase 230 V” table divided by $\sqrt{3}$.

■ 3-phase circuit, 400 V (with neutral)

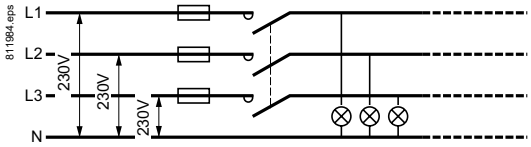

The maximum number of lamps which can be operated per phase is equal to the total number of lamps in the “single-phase 230 V” table.

Contactor rating for a single-phase 230 V circuit (single-pole)

Fluorescent lamps with starter

Single fitting	Non corrected					With parallel correction					Contactor rating
P (W)	20	40	50	80	110	20	40	58	80	110	–
I_B (A)	0.39	0.43	0.70	0.80	1.2	0.19	0.29	0.46	0.57	0.79	–
C (µF)	–	–	–	–	–	5	5	7	7	16	–
Maximum number of lamps	22	20	13	10	7	15	15	10	10	5	**16 A**
	30	28	17	15	10	20	20	15	15	7	**25 A**
	70	60	35	30	20	40	40	30	30	14	**40 A**
	100	90	56	48	32	60	60	43	43	20	**63 A**
Twin fitting	**Non corrected**					**With series correction**					**Contactor rating**
P (W)	2 x 18	2 x 36	2 x 58	2 x 80	2 x 140	2 x 18	2 x 36	2 x 58	2 x 80	2 x 140	–
I_B (A)	0.44	0.82	1.34	1.64	2.2	0.26	0.48	0.78	0.96	1.3	–
C (µF)	–	–	–	–	–	3.5	4.5	7	9	18	–
Maximum number of lamps	20	11	7	5	4	30	17	10	9	6	**16 A**
	30	16	10	8	6	46	25	16	13	10	**25 A**
	50	26	16	13	10	80	43	27	22	16	**40 A**
	75	42	25	21	16	123	67	42	34	25	**63 A**

High pressure mercury vapour lamps

	Non corrected						With parallel correction							Contactor rating
P (W)	50	80	125	250	400	700	50	80	125	250	400	700	1000	–
I_B (A)	0.6	0.8	1.15	2.15	3.25	5.4	0.35	0.50	0.7	1.5	2.4	4	5.7	–
C (µF)	–	–	–	–	–	–	7	8	10	18	25	40	60	–
Maximum number of lamps	15	10	8	4	2	1	10	9	9	4	3	2	–	**16 A**
	20	15	10	6	4	2	15	13	10	6	4	2	1	**25 A**
	34	27	20	10	6	4	28	25	20	11	8	5	3	**40 A**
	53	40	28	15	10	6	43	38	30	17	12	7	5	**63 A**

***I_B**: value of current drawn by each lamp at its rated voltage.*
***C**: unit capacitance for each lamp.*
***I_B** and **C** correspond to values normally quoted by lamp manufacturers*

References:
page B8/54

Dimensions, schemes:
pages B8/120 to B8/122

Life Is On Schneider Electric

Characteristics in lighting applications

Contactor rating for a single-phase 230 V circuit
(single-pole) (continued)

Low pressure sodium vapour lamps													
	Non corrected						With parallel correction						Contactor rating
P (W)	18	35	55	90	135	180	18	35	55	90	135	180	–
I_B (A)	0.35	1.4	1.4	2.1	3.1	3.1	0.35	0.6	0.6	0.9	0.9	0.9	–
C (µF)	–	–	–	–	–	–	5	20	20	26	45	40	–
Maximum number of lamps	18	4	5	3	2	2	14	3	3	2	1	1	**16 A**
	34	9	9	6	4	4	21	5	5	4	2	2	**25 A**
	57	14	14	9	6	6	40	10	10	8	4	5	**40 A**
	91	24	24	19	10	10	60	15	15	11	6	7	**63 A**

High pressure sodium vapour lamps												
	Non corrected					With parallel correction						Contactor rating
P (W)	70	150	250	400	1000	70	150	250	400	1000		–
I_B (A)	1	1.8	3	4.4	10.3	0.6	0.7	1.5	2.5	6		–
C (µF)	–	–	–	–	–	12	20	32	45	100		–
Maximum number of lamps	8	4	2	1	–	6	6	2	2	1		**16 A**
	12	7	4	3	1	9	9	3	4	2		**25 A**
	20	13	8	5	2	18	18	6	8	4		**40 A**
	32	18	11	8	3	25	25	9	12	6		**63 A**

Metal iodine or halogen vapour lamps														
	Non corrected						With parallel correction							Contactor rating
P (W)	35	70	150	250	400	1000	39	70	150	250	400	1000	2000	–
I_B (A)	0.3	0.5	1	1.5	2.5	6	0.3	0.5	1	1.5	2.5	6	5.5	–
C (µF)	–	–	–	–	–	–	6	12	20	32	45	85	60	–
Maximum number of lamps	27	16	8	5	3	1	12	6	4	3	2	–	1	**16 A**
	40	24	12	8	5	2	18	9	6	4	3	1	2	**25 A**
	68	42	20	14	8	4	31	16	10	7	5	3	3	**40 A**
	106	64	32	21	13	5	50	25	15	10	7	4	5	**63 A**

Incandescent and halogen lamps									
									Contactor rating
P (W)	60	75	100	150	200	300	500	1000	–
I_B (A)	0.26	0.32	0.44	0.65	0.87	1.3	2.17	4.4	–
Maximum number of lamps	30	25	19	12	10	7	4	2	**16 A**
	45	38	28	18	14	10	6	3	**25 A**
	85	70	50	35	26	18	10	6	**40 A**
	125	100	73	50	37	25	15	8	**63 A**

Halogen lamps used with transformer					
					Contactor rating
P (W)	60	80	105	150	–
I_B (A)	0.26	0.35	0.45	0.65	–
Maximum of lamps	9	8	6	4	**16 A**
	14	12	9	6	**25 A**
	27	23	18	13	**40 A**
	40	35	27	19	**63 A**

***I_B**: value of current drawn by each lamp at its rated voltage.*
***C**: unit capacitance for each lamp.*
***I_B** and **C** correspond to values normally quoted by lamp manufacturers*

References:
page B8/54

Dimensions, schemes:
pages B8/120 to B8/122

Characteristics in heating applications

Heating (AC-7a)

Single-phase, 2-pole switching

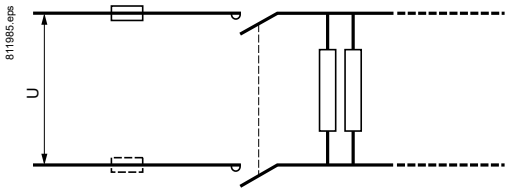

3-phase switching

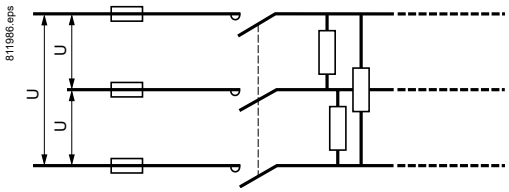

Heating by resistive elements or by infra-red radiators, convectors or radiators, heating ducts, industrial furnaces. The current peak between the hot and cold states must not exceed 2 to 3 In at the moment of switch-on.

Contactor selection according to power and required electrical life

Electrical durability (in operating cycles)	Maximum power (kW)					Contactor rating
	100 x 10^3	150 x 10^3	200 x 10^3	500 x 10^3	10^6	
Single-phase switching 230 V (2-pole)	3.5	3	2.2	1	0.8	**16 A**
	5.4	4.6	3.5	1.6	1.2	**25 A**
	8.6	7.4	5.6	2.6	1.9	**40 A**
	13.6	11.6	8.8	4	3	**63 A**
	21.6	18.4	14	6.4	4.8	**100 A**
3-phase switching 400 V (3-pole)	10	9	6.5	3.2	2.2	**16 A**
	16	14	10	5	3.5	**25 A**
	26	22	17	7.5	6	**40 A**
	41	35	26.5	12	9	**63 A**
	64.8	55.2	42	19.2	14.4	**100 A**

References:
page B8/54

Dimensions, schemes:
pages B8/120 to B8/122

Life Is On Schneider Electric

Characteristics in motor control applications

Motor control (AC-7b)

Single-phase circuit, 230 V

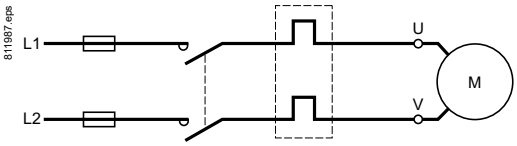

3-phase circuit, 400 V

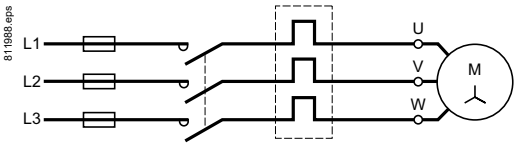

Contactor selection according to maximum power in kW

230 V single-phase capacitor motor (2-pole)	**400 V 3-phase motor**	**Contactor rating** (Ith)
0.55	2.2	**16 A**
1.1	4	**25 A**
2.2	7.5	**40 A**
4	11	**63 A**

References:
page B8/54

Dimensions, schemes:
pages B8/120 to B8/122

Dimensions

Dimensions

Contactors

Common side view	GC1610, 1611, 1620 GC2502, 2510, 2511, 2520	GC1622, 1640 GC2504, 2522, 2530, 2540
	1 module	2 modules

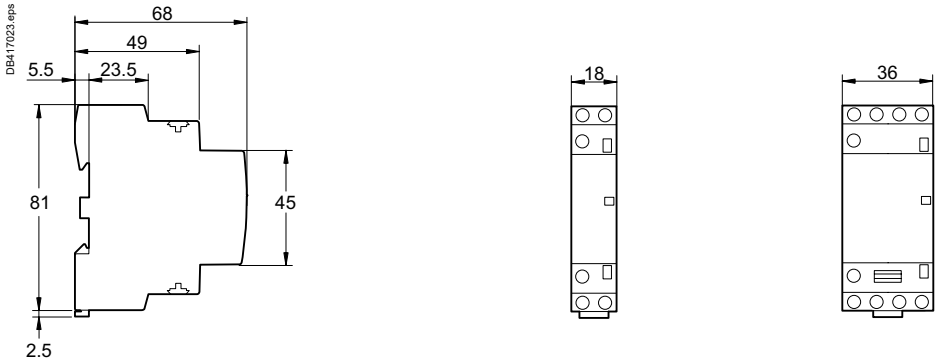

Common side view	GC4002, 4011, 4020 GC6302, 6311, 6320	GC4004, 4022, 4030, 4040 GC6304, 6322, 6330, 6340
	2 modules	3 modules

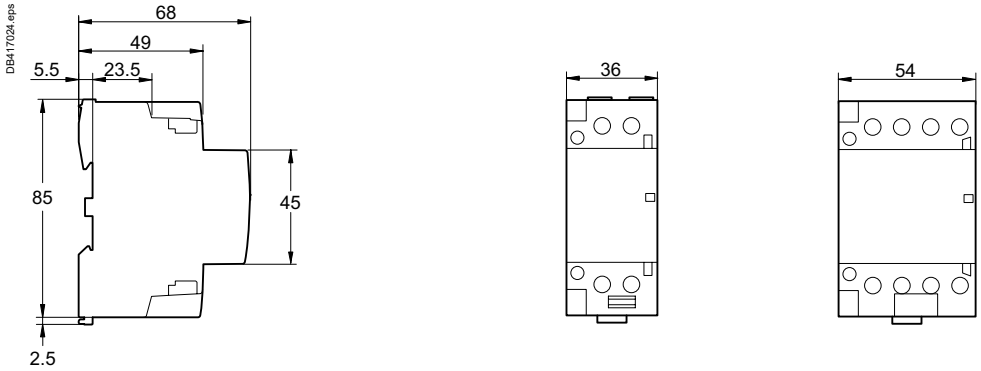

Common side view	GC10020	GC10040
	3 modules	6 modules

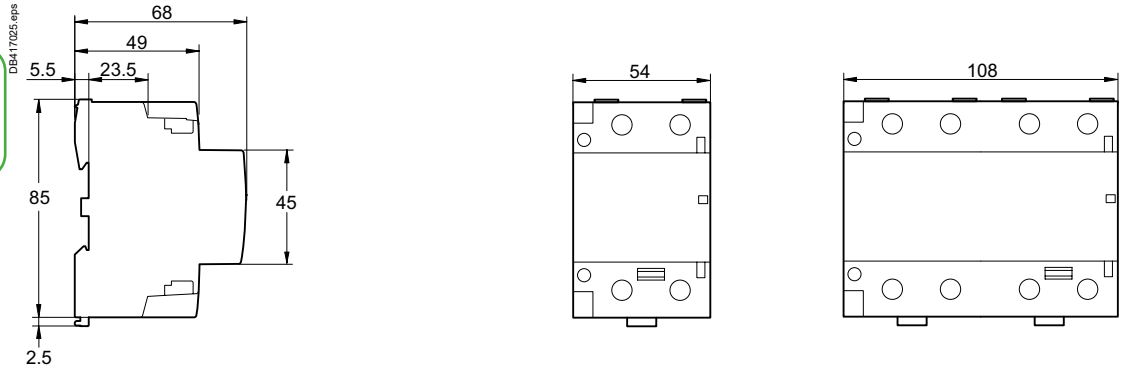

Ref.
Contactors

Dimensions and mounting

Dimensions

Auxiliary contacts
GAC0511, 0531 and 0521

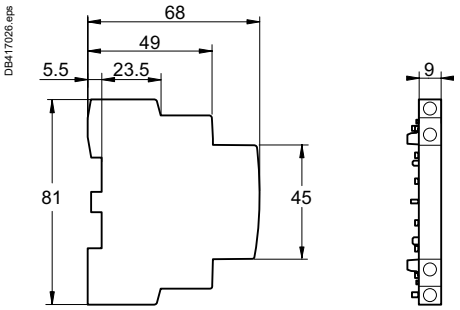

Coil suppression blocks
GAP21 and 23

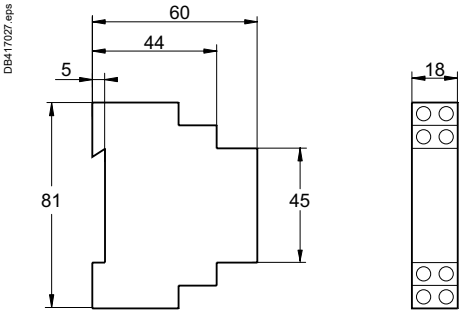

Clip-on ventilation 1/2 module
GAC5

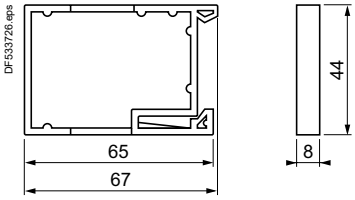

Mounting

Setting-up precautions

The contactor controls must be bounce free. If not, connect a coil suppression block 1 (GAP21 or 23) across the coil terminals y 250 V. When several contactors which operate at the same time are mounted side by side, a GAC 5 ventilation 1/2 module 2 must be fitted every 2 contactors.

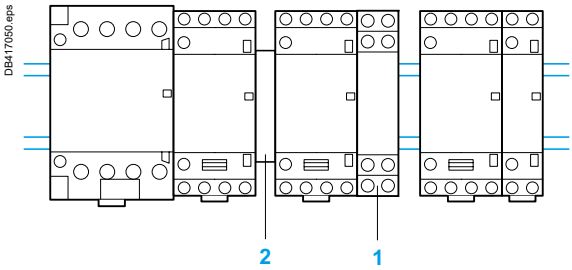

It is advisable to mount electronic units at the bottom of the modular panel and to separate them from electromechanical units by a space 3 equal to one module, or by 2 ventilation 1/2 modules (GAC 5).

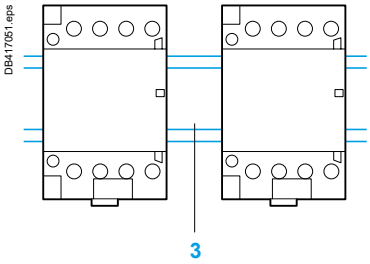

Ref.
Contactors

Schemes

Schemes

Contactors

GC●●10

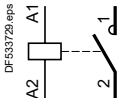

GC●●20

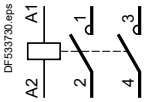

GC●●30

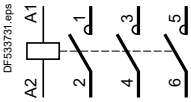

GC●●40

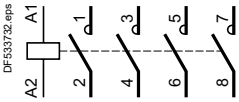

GC●●11

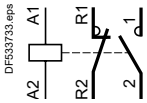

GC●●22

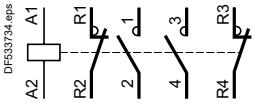

GC●●02

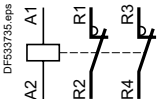

GC●●04

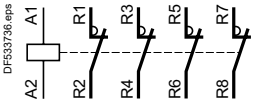

Auxiliary contacts

GAC0521

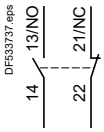

GAC0531

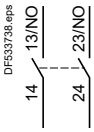

GAC0511

Ref.

Characteristics

PB113083_13.eps

GY25

Modular "dual tariff" contactors are designed for use in modular panels and enclosures.
These contactors feature:
■ **Easy installation:**
□ quick clip-on fixing and locking onto 35 mm omega rail
□ easy connection by means of ready-to-tighten captive, pozidrive screw terminals.
■ **Compact size**
All units have a common depth of 60 mm and width in modules of 17.5 mm (width of one module: 17.5 mm).
■ **User safety:**
□ use of materials conforming to strictest fire safety standards
□ live parts protected against direct finger contact
□ completely safe operation
□ state indication on front panel.
"Dual tariff" contactors are designed for use with Electricity Supply Authority dual tariffs.
They have a 4-position selector switch on the front panel:

"Stop" (O)	For switching off the load, e.g. for prolonged periods of absence.
"Off peak" Automatic start (A)	The contactor switches automatically during "off peak" hours as set by the Supply Authority remote control and thus supplies the load, (washing machine, dishwasher, convector heater, water heater) during this period, at an economy rate to the user.
"Peak time" Manual start (I)	In this position, the contactor supplies the load to cater for additional requirements for hot water, heating, etc., but at the standard rate. The contactor returns automatically to the "off-peak" position at the start of the "off-peak" period.
"Peak time" Manual override with lock	Facility for setting the contactor to continuous manual operation, ignoring the automation system and the Supply Authority control; setting and locking is achieved by means of a tool, with manual return to the "AUTO" position.

Standards

This range of modular contactors has been designed taking into account the requirements of international standard IEC 61095.
This standard is specific to "Electromagnetic contactors for domestic and similar use".
It has very strict requirements, meeting the expectations of users, with regard to the safety of equipment and persons in "premises and areas accessible to the public".
Conformity with this standard makes it possible to obtain the following quality labels without the need for additional tests: NF-USE, VDE, CEBEC, etc.

"Dual tariff" modular contactors are designed for switching all single-phase, 3-phase or 4-phase loads up to 63 A.

Modular contactors have multiple applications in industrial, agricultural and commercial premises, hospitals and the home, i.e. wherever switching of a specific supply is required:
■ lighting,
■ heating, ventilation,
■ motorised shutters or gates.

References:
page B8/55
Dimensions:
pages B8/126 and B8/127
Schemes:
page B8/127

Characteristics

Environment

Type			GY16	GY25	GY40	GY63
Rated insulation voltage (Ui)	Conforming to IEC 61095	V	500			
	Conforming to VDE 0110	V	500			
Rated impulse withstand voltage (Uimp)		kV	4 in enclosure			
Conforming to standards			IEC 61095 and IEC 60947-5-1 for auxiliary contacts			
Product certifications			NF-USE, VDE, CEBEC, ÖVE			
Degree of protection	Conforming to IEC 60529		Protection against direct finger contact IP 20 open, IP 40 in enclosure			
Ambient air temperature around the device	Storage	°C	-40…+70			
	Operation	°C	-5…+50 (0.85…1.1 Uc)			
Maximum operating altitude	Without derating	m	3000			
Operating positions	Without derating		±30° in relation to normal vertical mounting plane			
Shock resistance 1/2 sine wave = 11 ms Conforming to IEC/EN 60068-2-27	Contactor open		10 gn			
	Contactor closed		15 gn			
Vibration resistance 5…300 Hz Conforming to IEC/EN 60068-2-6	Contactor open		2 gn			
	Contactor closed		3 gn			
Flame resistance			Conforming to IEC 61095			

Pole characteristics

Number of poles			2, 3 or 4			
Rated operational current (Ie) (Ue ≤ 440 V)	In AC-7a (heating)	A	16	25	40	63
	In AC-7b (motor control)	A	5	8.5	15	25
Contactor rating	40 °C		16	25	40	63
	50 °C		14	22	36	57
	60 °C (1)		13	20	32	50
Rated operational voltage (Ue)	Up to	V	250 - 2-pole contactors, 415 - 3 and 4-pole contactors			
Frequency limits	Of the operating current	Hz	400			
Conventional thermal current (Ith)	θ ≤ 50 °C	A	16	25	40	63
Rated breaking and making capacity	Conforming to IEC 61095 (AC-7b) I rms 400 V 3-phase	A	40	68	120	200
Short time rating with no current flow for the previous previous 15 minutes with θ ≤ 40 °C	For 10 s	A	128	200	320	504
	For 30 s	A	40	62	100	157
Short-circuit protection by fuse or circuit breaker U ≤ 440 V						
gl fuse		A	16	25	40	63
Circuit breaker I²t (at 3 kA rms prospective)	230V	A²s	5000	10000	16000	18000
	400V	A²s	9000	14000	17500	20000
Electrical durability in operating cycles	AC-7a, AC-7b		100000	100000	100000	100000
Average impedance per pole	At Ith and 50 Hz	mΩ	2.5	2.5	2	2
Power dissipated per pole	For the above operational currents	W	0.65	1.6	3.2	8
Maximum cabling c.s.a.						
Flexible cable without cable end	1 conductor	mm²	6	6	25	25
	2 conductors	mm²	4	4	16	16
Flexible cable with cable end	1 conductor	mm²	6	6	16	16
	2 conductors	mm²	1.5	1.5	4	4
Solid cable without cable end	1 conductor	mm²	6	6	25	25
	2 conductors	mm²	4	4	6	6
Tightening torque	Power circuit connections	N.m	0.8	0.8	3.5	3.5

(1) Ventilation 1/2 module must be fitted.

References: page B8/55
Dimensions: pages B8/126 and B8/127
Schemes: page B8/127

Characteristics

Control circuit characteristics

Type			GY16, GY25 single or 2-pole	GY16, GY25 3 or 4-pole / GY40, GY63 2-pole	GY40, GY63 3 or 4-pole
Rated control circuit voltage (Uc)	50 or 60 Hz	V	12…240 V, for other voltages, please consult your Regional Sales Office		
Control voltage limits (θ ≤ 50 °C)					
50 Hz coils	Operational		0.85…1.1 Uc		
	Drop-out		0.2…0.75 Uc		
Average consumption at 20 °C and at Uc					
∼ 50 Hz	Inrush	VA	15	34	53
	Sealed	VA	3.8	4.6	6.5
Heat dissipation	50/60 Hz	W	1.3	1.6	2.1
Operating time	Closing "C"	ms	10 ... 30		
	Opening "O"	ms	10 ... 25		
Mechanical durability	In operating cycles		10^6		
Maximum operating rate at ambient temperature ≤ 50 °C	In operating cycles per hour		300		
Maximum cabling c.s.a.					
Flexible cable without cable end	1 or 2 conductors	mm²	2.5		
Flexible cable with cable end	1 conductor	mm²	2.5		
	2 conductors	mm²	1.5		
Solid cable without cable end	1 or 2 conductors	mm²	1.5		
Tightening torque		N.m	0.8		

Instantaneous auxiliary contact characteristics

Rated operational voltage (Ue)	Up to	V	250
Rated insulation voltage (Ui)	Conforming to IEC 60947-5	V	500
	Conforming to VDE 0110	V	500
Conventional thermal current (Ith)	For ambient θ ≤ 50 °C	A	5
Mechanical durability	In operating cycles		10^6
Maximum cabling c.s.a.	Flexible or solid conductor	mm²	2.5
Tightening torque		N.m	0.8

Ref.
Contactors

References:
page B8/55

Dimensions:
pages B8/126 and B8/127

Schemes:
page B8/127

Dimensions

Dimensions

"Dual tariff" contactors

Common side view	GY1620 GY2520	GY2530, 2540
	1 module	2 modules

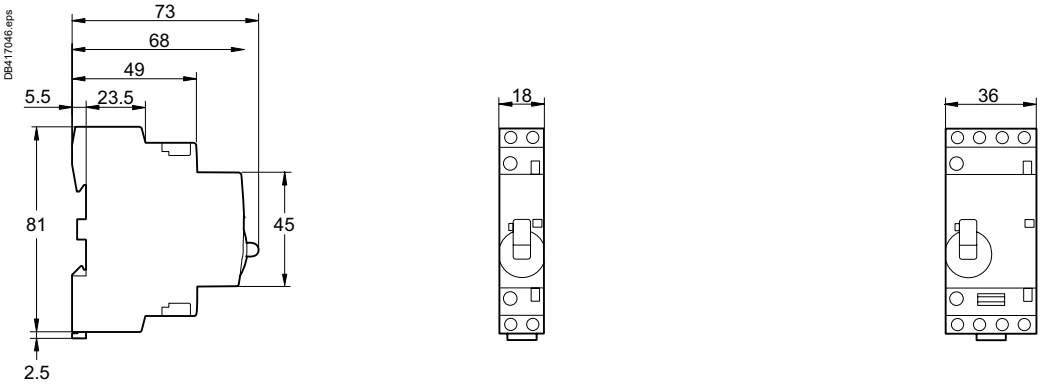

Common side view	GY4020 GY6320	GY4030, 4040 GY6330, 6340
	2 modules	3 modules

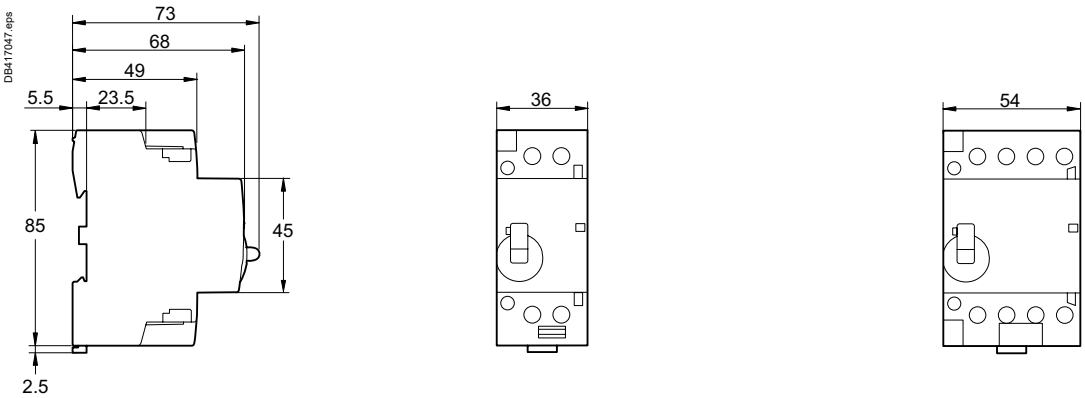

Auxiliary contacts

GAC0511, 0531 and 0521

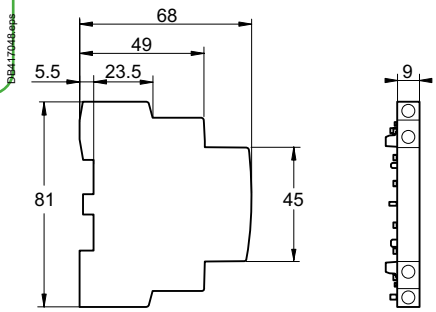

Coil suppression block

GAP21 and 23

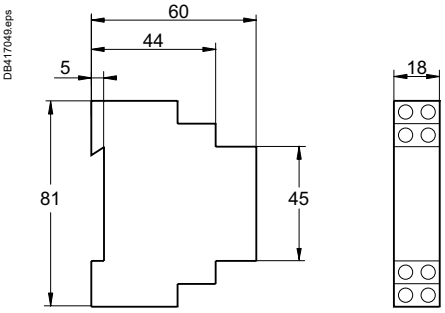

Clip-on ventilation 1/2 module

GAC5

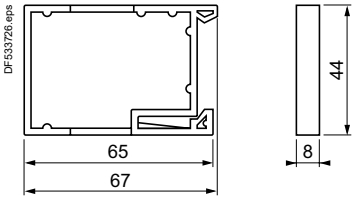

References:
page B8/55

Characteristics:
pages B8/123 to B8/125

Life Is On Schneider Electric

Mounting

Setting-up precautions

The contactor controls must be bounce free. If not, connect a coil suppression block 1 (GAP 21 or 23) across the coil terminals ≤ 250 V.
When several contactors which operate at the same time are mounted side by side, a GAC5 ventilation 1/2 module 2 must be fitted every 2 contactors.

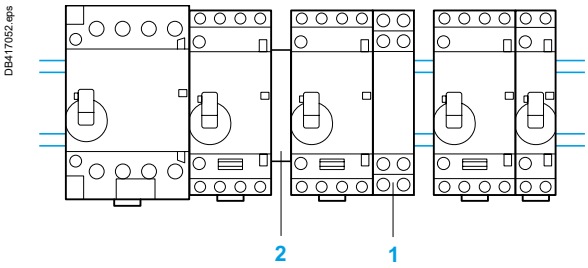

It is advisable to mount electronic units at the bottom of the modular panel and to separate them from electromechanical units by a space equal to one module 3 or by 2 ventilation 1/2 modules GAC5.

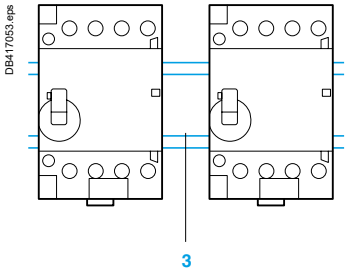

Schemes

Contactors

GY●●20

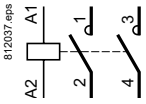

GY●●30

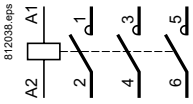

GY●●40

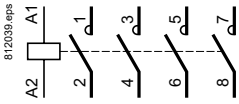

GY●●11

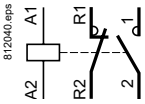

Auxiliary contacts

GAC0521

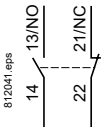

GAC0531

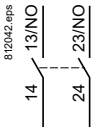

GAC0511

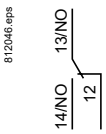

Ref.
Contactors

Characteristics

PF526284R.eps

GF1611M7

Modular impulse relays are designed for use in modular enclosures.
They feature:

■ **Easy installation:**
□ quick clip-on fixing and locking onto 35 mm omega rail
□ easy connection by means of ready-to-tighten captive, pozidrive screw terminals.

■ **Compact size**
Units have a common depth of 60 mm and width of 18 mm.

■ **User safety:**
□ live parts protected against direct finger contact
□ completely safe operation
□ state indication on front panel.

Standards

This range of modular impulse relays has been designed taking into account the requirements of international standard IEC 60669-2.
This standard is specific to “Impulse relays”.
Conformity with this standard makes it possible to obtain the following quality labels without the need for additional tests: NF-USE, VDE, CEBEC, etc.

Functions

Modular impulse relays are designed for opening and closing of circuits which are remotely controlled by impulses. The position is mechanically maintained.
These impulse relays are used in lighting circuits when there are more than two switching points.

Power switching

Modular impulse relays have multiple applications in industrial, agricultural and commercial premises, hospitals and the home, i.e. wherever switching of a specific lighting supply is required.

References:
page B8/56

Dimensions, schemes:
page B8/132

Life Is On Schneider Electric

Characteristics

Environment

Rated insulation voltage (Ui)	Conforming to IEC 60947-1-5	**V**	400
	Conforming to VDE 0110	**V**	400
Rated impulse withstand voltage (Uimp)		**kV**	4 in enclosure
Conforming to standards			IEC 60669-1 and 60669-2
Product certifications			NF-USE, CEBEC, ASE, KEMA, N, S, D, FI, VDE
Degree of protection	Conforming to IEC 60529		Protection against direct finger contact IP 20 open, IP 40 in enclosure
Ambient air temperature around the device	Storage	**°C**	-40…+80
	Operation	**°C**	-20…+50
Maximum operating altitude	Without derating	**m**	2000
Operating positions	Without derating		±90° in relation to normal vertical mounting plane
Shock resistance 1/2 sine wave = 10 ms Conforming to IEC/EN 60068-2-27	Impulse relay open		Please consult your Regional Sales Office
	Impulse relay closed		Please consult your Regional Sales Office
Vibration resistance 5…300 Hz Conforming to IEC/EN 60068-2-6	Impulse relay open		4 gn
	Impulse relay closed		4 gn

Pole characteristics

Number of poles				1 or 2	
Rated operational current (Ie) (Ue ≤ 250 V)		In AC-7a (heating)	**A**	16	
Rated operational voltage			**V**	250	
Conventional thermal current (Ith)		θ ≤ 50 °C	**A**	16	
Permissible short time rating no current flowing for preceding 15 minutes with θ ≤ 40 °C		For 1 s	**A**	320	
		For 10 s	**A**	96	
		For 30 s	**A**	48	
Short-circuit protection by fuse or circuit breaker		gl fuse	**A**	16	
		Circuit breaker I^2t (at 3 kA rms prospective)	**A^2s**	5000	
Average impedance per pole		At Ith and 50 Hz	**mΩ**	4	
Power dissipated per pole			**W**	1	
Maximum cabling c.s.a.				**Min.**	**Max.**
	Flexible cable without cable end	1 conductor	**mm^2**	0.5	6
		2 conductors	**mm^2**	0.5	4
	Flexible cable with cable end	1 conductor	**mm^2**	0.5	6
		2 conductors	**mm^2**	0.5	4
	Solid cable without cable end	1 conductor	**mm^2**	0.5	6
		2 conductors	**mm^2**	0.5	4
Tightening torque		Power circuit connections	**N.m**	0.8	

Ref.
Contactors

References:
page B8/56

Dimensions, schemes:
page B8/132

Control circuit characteristics

Rated control circuit voltage (Uc)			**V**	12…240 V, for other voltages, please consult your Regional Sales Office
Control voltage limits (θ < 50 °C)		Operating threshold, dual frequency 50/60 Hz	**V**	0.85…1.1 Uc
Average consumption at 20 °C and at Uc		Inrush at 50 Hz	**VA**	19
Operating time		Closing "C"	**ms**	70
		Opening "O"	**ms**	70
Minimum impulse time			**ms**	70
Mechanical durability				10^6 operating cycles
Electrical durability				
		AC-21		200000 operating cycles
		AC-22		100000 operating cycles
Maximum operating rate		Operating cycles per hour		900
Maximum cabling c.s.a.				
	Flexible cable without cable end	1 or 2 conductors	**mm²**	2.5
	Flexible cable with cable end	1 conductor	**mm²**	2.5
		2 conductors	**mm²**	1.5
	Solid cable without cable end	1 or 2 conductors	**mm²**	1.5
Tightening torque			**N.m**	0.8

References:
page B8/56

Dimensions, schemes:
page B8/132

Life Is On Schneider Electric

Characteristics in lighting and heating applications

Lighting circuits

Fluorescent lamps with starter

Single fitting	Non corrected			With parallel correction		
Power in W	18	36	58	18	36	58
Number of lamps	70	35	21	50	25	16

Twin fitting	With series correction		
Power in W	2 x 18	2 x 36	2 x 58
Number of lamps	56	28	17

Incandescent lamps: filament lamps

Power in W	40	60	75	100	200
Number of lamps	40	25	20	16	8

Incandescent lamps: halogen lamps

Power in W	300	500	1000	1500
Number of lamps	5	3	1	1

Incandescent lamps: very low voltage halogen lamps

Power in W	20	50	75	100
Number of lamps	70	28	19	4

Low pressure sodium vapour lamps

	Non corrected			
Power in W	55	90	135	180
Number of lamps	24	15	10	7

High pressure sodium vapour lamps

	Non corrected		
Power in W	250	400	1000
Number of lamps	5	3	1

Heating circuits

Single-phase 230 V, 2-pole

Power in kW	3.6

References:
page B8/56

Dimensions, schemes:
page B8/132

Dimensions and schemes

Dimensions

GF1610, GF1611, GF1620

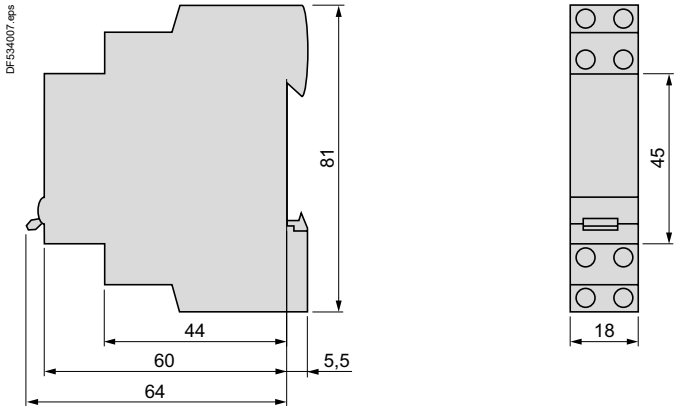

Schemes

GF1610

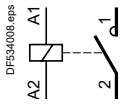

GF1611

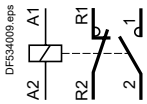

GF1620

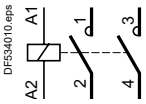

References:
page B8/56

Characteristics:
pages B8/128 to B8/131

Life Is On Schneider Electric

Test conditions according to IEC utilization categories

Contactor characteristics are established following tests and utilization categories whose are conforming IEC 60947-4-1 and 5-1 standards.

Contactors

a.c. supply		Electrical durability: making and breaking conditions						Occasional duty: making and breaking conditions					
Typical applications	**Utilisation category**	**Making**			**Breaking**			**Making**			**Breaking**		
		I	**U**	**cos φ**	**I**	**U**	**cos φ**	**I**	**U**	**cos φ**	**I**	**U**	**cos φ**
Resistors, non inductive or slightly inductive loads	**AC-1**	Ie	Ue	0.95	Ie	Ue	0.95	1.5 Ie	1.05 Ue	0.8	1.5 Ie	1.05 Ue	0.8
Motors													
Slip ring motors: starting, breaking.	**AC-2**	2.5 Ie	Ue	0.65	2.5 Ie	Ue	0.65	4 Ie	1.05 Ue	0.65	4 Ie	1.05 Ue	0.65
Squirrel cage motors: starting, breaking whilst motor running.	**AC-3**												
	Ie ≤ (1)	6 Ie	Ue	0.65	1 Ie	0.17 Ue	0.65	10 Ie	1.05 Ue	0.45	8 Ie	1.05 Ue	0.45
	Ie > (2)	6 Ie	Ue	0.35	1 Ie	0.17 Ue	0.35	10 Ie	1.05 Ue	0.35	8 Ie	1.05 Ue	0.35
Squirrel cage motors: starting, breaking whilst motor running.	**AC-3e**												
	Ie ≤ (1)	6 Ie	Ue	0.65	1 Ie	0.17Ue	0.65	13 Ie	1.05 Ue	0.45 (4)	8.5 Ie	1.05 Ue	0.45 (4)
	Ie > (2)	6 Ie	Ue	0.35	1 Ie	0.17Ue	0.35	13 Ie	1.05 Ue	0.35 (5)	8.5 Ie	1.05 Ue	0.35 (5)
Squirrel cage motors: starting, reversing, inching	**AC-4**												
	Ie ≤ (1)	6 Ie	Ue	0.65	6 Ie	Ue	0.65	12 Ie	1.05 Ue	0.45	10 Ie	1.05 Ue	0.45
	Ie > (2)	6 Ie	Ue	0.35	6 Ie	Ue	0.35	12 Ie	1.05 Ue	0.35	10 Ie	1.05 Ue	0.35

d.c. supply													
Typical applications	**Utilisation category**	**Making**			**Breaking**			**Making**			**Breaking**		
		I	**U**	**L/R** (ms)	**I**	**U**	**L/R** (ms)	**I**	**U**	**L/R** (ms)	**I**	**U**	**L/R** (ms)
Resistors, non inductive or slightly inductive loads	**DC-1**	Ie	Ue	1	Ie	Ue	1	1.5 Ie	1.05 Ue	1	1.5 Ie	1.05 Ue	1
Shunt wound motors: starting, reversing, inching	**DC-3**	2.5 Ie	Ue	2	2.5 Ie	Ue	2	4 Ie	1.05 Ue	2.5	4 Ie	1.05 Ue	2.5
Series wound motors: starting, reversing, inching	**DC-5**	2.5 Ie	Ue	7.5	2.5 Ie	Ue	7.5	4 Ie	1.05 Ue	15	4 Ie	1.05 Ue	15

Control relays and auxiliary contacts

a.c. supply		Electrical durability: making and breaking conditions						Occasional duty: making and breaking conditions					
Typical applications	**Utilisation category**	**Making**			**Breaking**			**Making**			**Breaking**		
		I	**U**	**cos φ**	**I**	**U**	**cos φ**	**I**	**U**	**cos φ**	**I**	**U**	**cos φ**
Electromagnets													
≤ 72 VA	**AC-14**	-	-	-	-	-	-	6 Ie	1.1 Ue	0.7	6 Ie	1.1 Ue	0.7
> 72 VA	**AC-15**	10 Ie	Ue	0.7	Ie	Ue	0.4	10 Ie	1.1 Ue	0.3	10 Ie	1.1 Ue	0.3

d.c. supply													
Typical applications	**Utilisation category**	**Making**			**Breaking**			**Making**			**Breaking**		
		I	**U**	**L/R** (ms)	**I**	**U**	**L/R** (ms)	**I**	**U**	**L/R** (ms)	**I**	**U**	**L/R** (ms)
Electromagnets	**DC-13**	Ie	Ue	6 P (3)	Ie	Ue	6 P (3)	1.1 Ie	1.1 Ue	6 P (3)	1.1 Ie	1.1 Ue	6 P (3)

(1) Ie ≤ 17 A for electrical durability, Ie ≤ 100 A for occasional duty.
(2) Ie > 17 A for electrical durability, Ie > 100 A for occasional duty.
(3) The value 6 P (in watts) is based on practical observations and is considered to represent the majority of d.c. magnetic loads up to the maximum limit of P = 50 W i.e. 6 P = 300 ms = L/R.
Above this, the loads are made up of smaller loads in parallel. The value 300 ms is therefore a maximum limit whatever the value of current drawn.
(4) Ie ≤ 100A
(5) Ie > 100A

North American market - UL CSA classification of motor starter applications

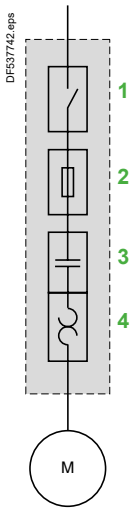

1 Motor Disconnect (Disconnect switch)
2 Motor Branch Circuit Protection (Short-circuit protection)
3 Motor Controller (Contactor)
4 Motor Overload Protection (Thermal overload relay)

Starters for the North American market

In recent years, the North American market has started to harmonise UL, CSA and ANCE standards, as well as the industrial installation codes provided by national regulations (NEC for the United States, CEC for Canada and MEC for Mexico). (1)
Major improvements, carried out by the Canena (2) are aimed at harmonising product requirements based on IEC (3) standards.
However, the North American codes use specific terminology for defining the functions of a starter.
These functions can be fulfilled by standard IEC products, accompanied by appropriate certifications.

Combination Starters

Combination Starters are the most common type of packaged motor starter. They are called "Combination" because of their structure and their combined functions. The figure opposite shows the four combined functions that constitute a complete motor starter circuit, defined as a “Motor branch circuit” by the NEC (US National Electric Code) in article 430. Standard UL508 currently gives different types of combination starter that meet the requirements of a "Motor branch circuit".

Type E, called “**self-protected combination starter**”, covers all these functions and can be controlled manually (thermal-magnetic circuit breaker) or remotely (starter-controller). Type E starters withstand faults within their declared nominal rating without sustaining damage, after which they can be put back into service. In addition, they can withstand more severe short-circuit and durability performance tests without welding or excessive wear of the contact tips.

Type F, called “**Combination motor starter**”, consists of a type E manual starter (thermal-magnetic circuit breaker) combined with a contactor.
These starters are evaluated by means of basic short-circuit tests, but are not considered as “self-protected”.

For this combination, the type E starter must be marked “Combination Motor Controller when used with ...”, followed by the reference of the load side contactor.

*(1) **UL**: Underwriters Laboratories, **CSA**: Canadian Standards Association, **ACNE**: Association of Standardization and Certification, **NEC**: National Electric Code, **CEC**: Canadian Electrical Code, **MEC**: Mexican Electrical Code.*
*(2) **Canena**: Council for Harmonization of Electrotechnical Standardization of North America.*
*(3) **IEC**: International Electrotechnical Commission.*

Life Is On Schneider Electric

Control panels

To help users properly coordinate their motor control equipment with their distribution system in the event of a fault, article 409 of the 2005 NEC requires panel builders to list the short-circuit withstand rating of their motor control panels.
According to standard UL508A, manufacturers must use the short-circuit withstand value of the lowest rated device as the nominal withstand rating of the panel, unless the devices have been tested together for a higher coordinated rating.
The minimum "**short-circuit current rating**" (SCCR), on motor control components for horsepower ratings of 50 hp or below is 5000 A.

Using a **type E** or **type F** combination starter eliminates the coordination problems of using individual components for the "motor branch circuit protection", "motor controller" and "motor overload protection" functions.
The panel builder uses the declared short-circuit current rating for the combination starter. This value is generally higher than 5000 A.
This makes it easier to list the short-circuit current ratings and to check the compatibility of a UL508A motor control panel within a given distribution system.

Group protection

Article 430.53 of the NEC allows a single short-circuit protection device to be used for more than one motor circuit if the components used are marked and listed for such use.
Components suitable for use in group protection, known as "**motor group installations**", can be marked in one of the following two ways:

Case n° 1

The contactor and the motor overload relay are both listed as suitable for group installation.
An inverse time circuit breaker can be used as the short-circuit protection device if it is also listed as suitable for group installation.
The panel builder must therefore make sure that the short-circuit protection device selected (fuses or inverse time circuit breaker) does not exceed the value allowed by article 430.40 for the smallest overload relay used in the circuit.
Once these conditions have been met, the panel builder can reduce the size of the conductor connecting the short-circuit protection device to the individual motor contactor/overload relay, to one third of the size of the upstream circuit conductor supplying the protection device.
The panel builder must limit the length of the motor starter conductor (connecting the short-circuit protection device to the motor contactor/overload relay) to a maximum of 7.6 m (25 feet).

Case n° 2

The motor contactor and overload relay are listed as suitable for "**tap conductor protection**" in group installations.
This category allows the panel designer to reduce the size of the conductor connecting the short-circuit protection device to the individual motor contactor/overload relay, to one tenth of the size of the upstream circuit conductor supplying the protection device.
The designer must limit the length of this conductor to a maximum of 3.05 m (10 feet).
In both cases, the supply circuits must not be less than 125 % of the connected motor FLA (Full Load Amps) rating.
For panel builders, using **type F** combination starters in group installations simplifies group motor considerations.
Each starter is a fully coordinated motor branch circuit.
The panel builder follows the same NEC requirements for sizing the supply conductors as those required for single motor branch circuits.
The size of the supply conductors can be reduced in accordance with the specifications of article 430.28.
This allows the same flexibility in conductor sizing as that offered in article 430.53 (D), without a requirement to check the short-circuit protection rating marked on the components and the overload relay limit.
A UL508A panel does not need a short-circuit protection device when each motor starter installed is a **type F**.
The upstream short-circuit protection device supplying the starter protects the panel. The panel builder only has to consider the panel/enclosure disconnect requirements specified by the NEC or local codes.

TeSys Control
Giga High power contactors

Introduction B9/4

TeSys Giga High power contactors

Type of product	Range		Pages
TeSys Giga High power contactors Advanced version - 3 and 4-poles	3-pole from 115 to 800 A – AC-3 3-pole and 4-pole from 250 to 1050 A – AC-1		B9/10
TeSys Giga High power contactors Standard version - 3 and 4-poles	3-pole from 115 to 800 A – AC-3 3-pole and 4-pole from 250 to 1050 A – AC-1		B9/12
Auxiliary modules, Accessories, Retrofit kits for TeSys Giga High power contactors			B9/14
Spare parts for TeSys Giga High power contactors			B9/20

Technical Data for Designers B9/23

On-line tools to configure your **motor starters**

EcoStruxure™ Motor Control Configurator

Scan or click
on the QR code

Build your starter configuration

- Build your motor starter configuration with different solutions
- Complete offer base suited for different countries.

Enhanced customer's journey

- Easy selection, replacing complex paper catalogs
- Covert into Bill of Materials (BoM) by adding the products to the cart.

Answers to customer needs

- Option to save and re-work your configurations
- Direct access to products documentation in one place
- Possibility with unique configurations ID and share.

Product Selector for **TeSys** Giga

Scan or click
on the QR code

Offer selection

- Easy selection of **TeSys** Giga Contactor or Overload Relays
- Intuitive tool to configure the devices to suit your needs
- Helps to select the right devices for your application.

Configure your motor starter components

- Options to select auxiliaries and accessories
- Configure reversers and changeover contactors with ease
- Get the extensive bill of material, export it in standard format (PDF, XLS), or drop it into the product cart
- Access to technical information and documentations for every item.

EcoStruxure Motor Management Design

Scan or click
on the QR code

Electrical design calculations for high-power motors

Easily perform basic calculations related to transformer size, short-circuit current and voltage drop, comparing direct-on-line, star-delta, soft-starter, and variable speed drive. Verify starting feasibility from mechanical standpoint and ensure power quality objectives are met, for power factor or harmonic levels. Check energy saving potential of using a variable speed drive for centrifugal pumps and fans.

Offer selection and report

Select among latest compatible offers to build a complete motor management solution: circuit breakers, contactors, MCC panels, drives, protection relays, power factor capacitors, active filters, power quality monitoring and services.
Get a summary report with calculations and recommended offers.

Product references – coding principle

> TeSys Giga High power contactors

LC1 — Contactor

G — TeSys Giga series

185 — **Contactor rating**
115: 115 A
150: 150 A
185: 185 A
225: 225 A
265: 265 A
330: 330 A
400: 400 A
500: 500 A
630: 630 A
800: 800 A

4 — **Poles**
Blank: 3-pole
4: 4-pole

EHE — **Control voltage (AC/DC)**
Advanced version (A)
BEE: 24…48 V (1)
EHE : 48...130 V
LSE: 200…500 V
Standard version (N)
EHE: 48…130 V
KUE: 100…250 V

N — **Offer type**
A: Advanced version
N: Standard version

Example:
LC1G400LSEA TeSys Giga Contactor Advanced version 400 A, 3-pole, 200...500 V AC/DC coil, with PLC control.
LC1G1854EHEN TeSys Giga Contactor Standard version 185 A, 4-pole, 48...130 V AC/DC coil, without PLC control.

(1) 24...48 V AC/DC control voltage option is available for LC1G115...LC1G500 ratings.

Quality and Performance as high priority

TeSys Giga
A new Generation series with digital innovation

Over more than 4 decades, the **TeSys F** range of contactors has built a high reputation for performance, reliability, and quality. The **TeSys F** range set the industrial standard for high power contactors with an installed base of millions of products. **TeSys F** contactors were the first choice of many OEMs, control panel builders and industrial users.

But industry requirements have evolved to demand process performance monitoring through data networks and online expert services.

TeSys Giga is Schneider Electric's new range of contactors that answer these evolving needs. TeSys Giga High power contactors support the evolution of processes and offer new services to reduce non-production time to a minimum. Replacing **TeSys F** Contactors, TeSys Giga High power contactors address a wide range of demanding applications with built-in advanced features and functionalities.

Futuristic ready…

TeSys Giga High power contactors are designed to work with components and accessories with advanced performance. The characteristics of robustness and longevity are maintained, both in the connectors and in the switching.

Continuous local and remote monitoring of contact wear optimizes predictive maintenance by allowing you to replace contacts only when necessary, facilitated by diagnostic visual indicator.

Every customer will benefit from the innovative design and feature, including the compact size, wideband electronic coils, embedded auxiliary contact blocks, ergonomic design, or flexibility in connections.

Applications

AC-3/AC-3e utilization category

AC-1 utilization category

- TeSys Giga High power contactors provide robust control solutions for AC-3/AC-3e applications up to 800 A and AC-1 applications up to 1050 A.
- TeSys Giga High power contactors can be part of a direct-on-line motor starter, reversing motor starter or a star-delta motor starter and power switching application.
- TeSys Giga High power contactors provide contact wear diagnostic and wideband AC/DC control.
- Suitable for type 2 coordination as per IEC60947-4-1.

Right choice for a wide range of demanding applications

TeSys Giga High power contactors ' unique design meets the common requirements of demanding high power applications:

- Conform to multi standards to suit global needs
- Long life expectancy in harsh environments
- Suitable for high efficiency motors
- Very good resistance to vibrations
- High uptime thanks to predictive maintenance
- Optimized installation and maintainability.

Intelligent design for greater advantages

- Interlock location, with knock-out cover
- On/Off switch for PLC input
- Push-in type control terminals enabling quick wiring and assembly
- Diagnosis LED for contact wear & voltage abnormality
- Built-in 1 NO + 1 NC auxiliary contact block
- Unique QR code providing quick access to complete product data
- Mechanical indicator for contactor open and closed status

Higher flexibility

TeSys Giga High power contactors can be mounted in different orientation without derating, providing high flexibility of your panel design.

Control wiring, auxiliary contacts and control module are accessible from the front.

Contact wear diagnostic and predictive maintenance

Contact wear is monitored by a dedicated module and shown in the front panel through LED, therefore the, predictive maintenance can be planned for replacing the complete set of switching modules, thus avoiding break-down maintenance. Switching modules [(1)] can be replaced quickly and easily thanks to their Plug and Play design.

(1) Refer to page B9/21 for details on switching modules.

Key features

Advanced contactor control

- The electronic control module provides wideband AC/DC coil control voltage, from 24 V to 500 V, allowing quick adaptation of existing industrial processes as well as new projects.
- The low power consumption of the coils could lead to significant savings on automation equipment. It's now possible to use interface relays with a lower rating, resulting in lower heat emission in the panel.
- The low power consumption of the coils also takes up less space in the panel and simplifies the diagrams by connecting these coils directly to the output cards of the PLCs.

Simplified wiring

- The pole pitch of the power terminals allows direct mounting and connection to TeSys Giga Electronic Overload Relays. Standardization of panel mounting and assembly reduces costs and assembly time.
- Push-in connection for control terminals provides flexibility, ease of connections, and reduced assembly and installation time.

Enhanced durability

- Durability is a top priority. TeSys Giga High power contactors are designed to offer uncompromising robustness and maintenance accessibility to site technicians. The duration of production down-time is reduced, resulting in improved profitability on your investment.

Advanced diagnostic features

- On-board diagnostics is a new feature in our latest generation of high power contactors. Counting the number of operations as well as monitoring duration of use and pole condition provides numerous benefits for the customer and improves reliability and maintenance planning.

Compact size

- Compact size provides easy access to power connections for connecting cables and busbars.

Easy maintenance

- The poles are designed as replaceable switching modules, so the performance of a used contactor can be fully restored. The modular design allows a quick and long-lasting replacement.
- Coils are accessible from the front and maintained with very low down times.

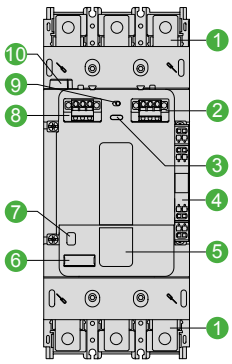

Advanced (*A) version

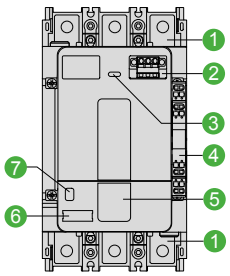

Standard (*N) version

1. Power connection (cable memory kit provided with Advanced version contactor)
2. A1-A2 coil terminal
3. Contact wear diagnosis LED
4. 1 NO + 1 NC auxiliary contact
5. QR code
6. Label holder
7. Status indicator
8. PLC control terminal
9. PLC control ON/OFF switch
10. Connector for Remote Wear Diagnostic (RWD) module

*: contactor references finishing by A or by N.

A comprehensive range of TeSys Giga High power contactors that are available in 'Advanced' and 'Standard' versions, in 3 sizes, covering several ratings.
A common range of auxiliary contacts and accessories, enabling high flexibility and simplicity.

> **TeSys** Giga High power contactors – Advanced version

115…225 A

265…500 A

630…800 A

Power & control
- 3 or 4 power poles
- 115 to 800 A (AC-3)
- 250 to 1050 A (AC-1)
- Embedded 1 NO + 1 NC auxiliary contacts
- Push-in type terminals for coils & control

Remote control
- 24-48 V, 48-130 V, 200-500 V AC/DC coils
- Low consumption coils
- Wide voltage range coils (direct coil control)
- Digital control input (PLC output digital coil control)
- Embedded surge suppressor

Diagnostic
- Embedded wear diagnostic
- Embedded control voltages diagnostic
- Self diagnosis function
- Local alarm signaling (LED)
- Remote wear diagnostic signaling kit (accessory)

Mounting
- 'Cable memory' adapter enables maintenance without removing power cables and busbar connections.

Standards and Certifications
- Multiple standards
- International certifications

> **TeSys** Giga High power contactors – Standard version

115…225 A

265…500 A

630…800 A

Power & control
- 3 or 4 power poles
- 115 to 800 A (AC-3)
- 250 to 1050 A (AC-1)
- Embedded 1 NO + 1 NC auxiliary contacts
- Push-in type terminals for coils & control

Remote control
- 48-130 V, 100-250 V AC/DC coils
- Wide voltage range coils (direct coil control)
- Embedded surge-suppressor

Diagnostic
- Embedded wear diagnostic
- Embedded control voltages diagnostic
- Self diagnosis function
- Local alarm signaling (LED)

Certifications
- Multiple standards
- International certifications

DB438441.ai

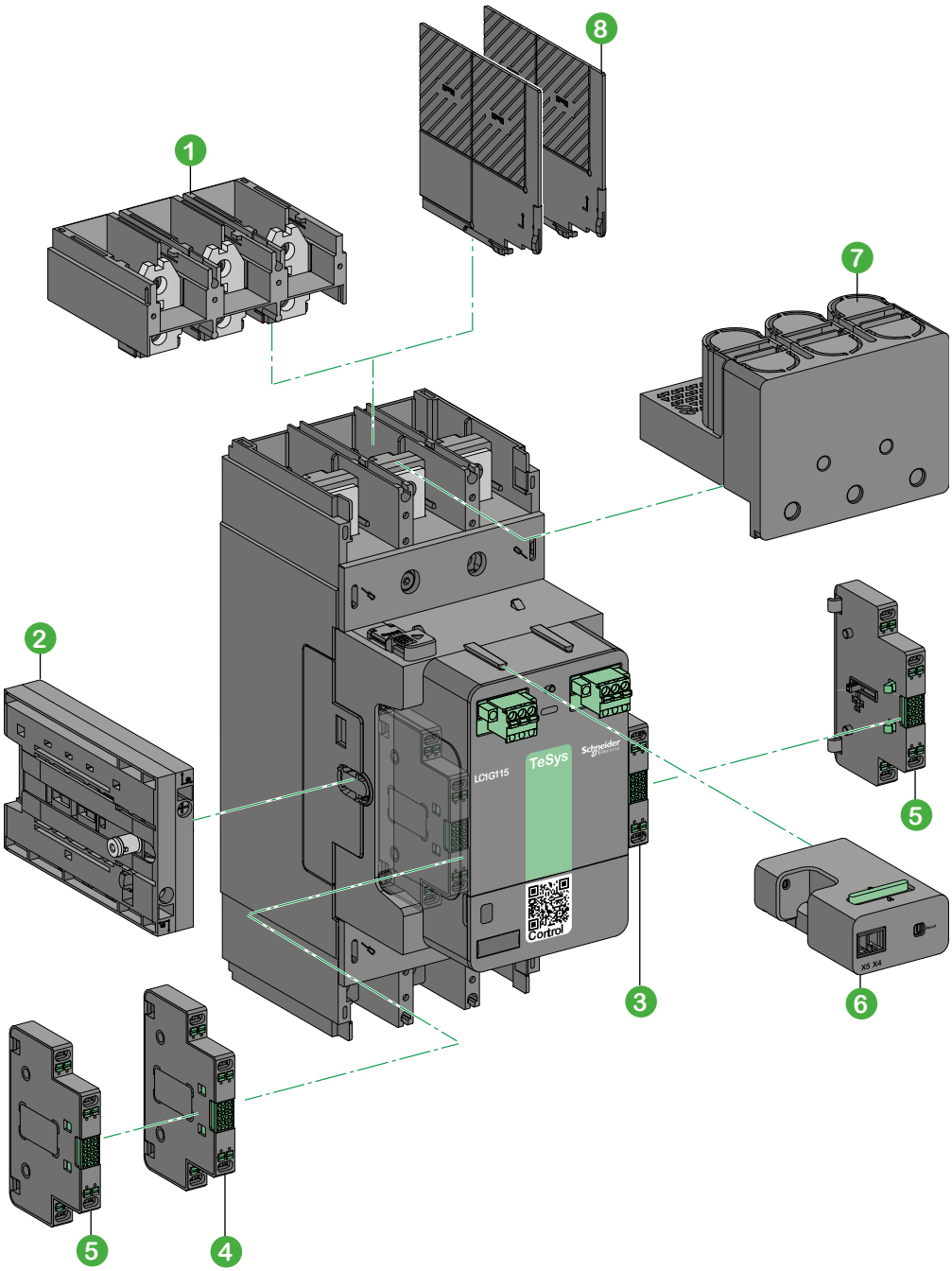

1. Cable memory kit **LA9G3102,** is always supplied along with Advanced version, and it's an optional accessory for Standard version.
2. Mechanical interlock **LA9G970**, can be installed on either side of the contactor.
3. Auxiliary contact module **LAG8N113P** (1 NO + 1 NC) supplied with LC1G contactor.
4. Auxiliary contact modules **LAG8N113P/ LAG8N203P,** can be installed on the contactor lateral faces [(1)]
5. Auxiliary contact modules **LAG8N113 / LAG8N203**, can be installed on either side as 2nd set of contacts.
6. Remote Wear Diagnostic (RWD) Module **LA9GRD01/ LA9GRD10**, can be installed and used only in Advanced version.
7. IP 20 terminal shroud **LA9G3701.**
8. Phase separators **LA9G3801**, please refer to pages B9/14 to B9/18 for complete details of available accessories.

Note: a maximum of 2 auxiliary contact modules can be mounted on each side of the contactor.
(1) Does not increase the contactor dimensions when fitted on both sides.

TeSys Giga 3-pole Advanced contactors – For motor control (115 to 800 A)

Double Page Table

Motor ratings (kW) θ ≤ 60 °C IEC AC-3							AC-3e [1]							AC-4						
230 V kW	400 V kW	415 V kW	440 V kW	500 V kW	690 V kW	1000 V kW	230 V kW	400 V kW	415 V kW	440 V kW	500 V kW	690 V kW	1000 V kW	230 V kW	400 V kW	415 V kW	440 V kW	500 V kW	690 V kW	1000 V kW
30	55	55	75	75	75	-	30	55	55	75	75	75	-	30	55	55	65	65	75	-
37	75	75	90	90	90	75	37	75	75	90	90	90	75	37	75	75	80	90	90	75
55	90	90	110	110	110	75	55	90	90	110	110	110	75	55	90	90	100	110	110	75
55	110	110	132	132	160	132	55	110	110	132	132	160	132	55	110	110	129	132	132	110
75	132	132	160	160	200	160	75	132	132	160	160	200	160	75	132	132	150	160	160	160
90	160	160	200	200	220	185	90	160	160	185	200	220	185	90	160	160	185	200	220	185
110	200	200	250	250	315	220	110	200	200	250	250	315	220	110	200	200	220	250	315	220
160	250	250	315	355	355	335	147	250	250	280	315	355	335	150	250	250	295	295	355	280
200	335	375	400	400	500	450	180	315	335	355	375	500	450	180	315	335	355	375	450	355
250	450	450	450	500	560	450	200	335	355	375	425	560	450	200	375	355	375	400	475	400

TeSys Giga 3-pole and 4-pole Advanced contactors for load control only (non motor) – (250 to 1050 A)

Maximum current (A) (θ ≤ 40 °C)	General purpose continuous current (A)	Reference Advanced version contactors AC/DC coil voltage					
		3-pole			4-pole		
IEC AC-1	UL	24…48 V	48…130 V	200…500 V	24…48 V	48…130 V	200…500 V
250	210	LC1G115BEEA	LC1G115EHEA	LC1G115LSEA	LC1G1154BEEA	LC1G1154EHEA	LC1G1154LSEA
275	230	LC1G150BEEA	LC1G150EHEA	LC1G150LSEA	LC1G1504BEEA	LC1G1504EHEA	LC1G1504LSEA
305	250	LC1G185BEEA	LC1G185EHEA	LC1G185LSEA	LC1G1854BEEA	LC1G1854EHEA	LC1G1854LSEA
330	290	LC1G225BEEA	LC1G225EHEA	LC1G225LSEA	LC1G2254BEEA	LC1G2254EHEA	LC1G2254LSEA
385	340	LC1G265BEEA	LC1G265EHEA	LC1G265LSEA	LC1G2654BEEA	LC1G2654EHEA	LC1G2654LSEA
440	390	LC1G330BEEA	LC1G330EHEA	LC1G330LSEA	LC1G3304BEEA	LC1G3304EHEA	LC1G3304LSEA
550	490	LC1G400BEEA	LC1G400EHEA	LC1G400LSEA	LC1G4004BEEA	LC1G4004EHEA	LC1G4004LSEA
700	630	LC1G500BEEA	LC1G500EHEA	LC1G500LSEA	LC1G5004BEEA	LC1G5004EHEA	LC1G5004LSEA
1050	850	-	LC1G630EHEA	LC1G630LSEA	-	LC1G6304EHEA	LC1G6304LSEA
1050	900	-	LC1G800EHEA	LC1G800LSEA	-	LC1G8004EHEA	LC1G8004LSEA

(1) Switching of IE3/IE4 high efficiency squirrel-cage motors.

Coordination tables: pages A5/7 to A5/42
Characteristics: pages B9/25 to B9/29
Dimensions: pages B9/30 to B9/32
Diagrams: page B9/34

Product references

Motor ratings (HP) UL- 3phase				Reference Advanced version contactors AC/DC coil voltage 3-pole		
200/208 V	**230/240 V**	**460/480 V**	**575/600 V**	**24-48 V**	**48-130 V**	**200-500 V**
30	40	75	100	**LC1G115BEEA**	**LC1G115EHEA**	**LC1G115LSEA**
40	50	100	125	**LC1G150BEEA**	**LC1G150EHEA**	**LC1G150LSEA**
50	60	125	150	**LC1G185BEEA**	**LC1G185EHEA**	**LC1G185LSEA**
60	75	150	150	**LC1G225BEEA**	**LC1G225EHEA**	**LC1G225LSEA**
75	100	200	200	**LC1G265BEEA**	**LC1G265EHEA**	**LC1G265LSEA**
100	125	250	300	**LC1G330BEEA**	**LC1G330EHEA**	**LC1G330LSEA**
125	150	300	400	**LC1G400BEEA**	**LC1G400EHEA**	**LC1G400LSEA**
150	200	400	450	**LC1G500BEEA**	**LC1G500EHEA**	**LC1G500LSEA**
250	300	600	700	-	**LC1G630EHEA**	**LC1G630LSEA**
300	350	700	800	-	**LC1G800EHEA**	**LC1G800LSEA**

Coordination tables: pages A5/7 to A5/42
Characteristics: pages B9/25 to B9/28
Dimensions: pages B9/30 to B9/32
Diagrams: page B9/34

TeSys Giga 3-pole Standard contactors – For motor control – (115 to 800 A)

Double Page Table

Motor ratings (kW) θ ≤ 60 °C IEC AC-3							AC-3e (1)							AC-4						
230 V kW	400 V kW	415 V kW	440 V kW	500 V kW	690 V kW	1000 V kW	230 V kW	400 V kW	415 V kW	440 V kW	500 V kW	690 V kW	1000 V kW	230 V kW	400 V kW	415 V kW	440 V kW	500 V kW	690 V kW	1000 V kW
30	55	55	75	75	75	-	30	55	55	75	75	75	-	30	55	55	65	65	75	-
37	75	75	90	90	90	75	37	75	75	90	90	90	75	37	75	75	80	90	90	75
55	90	90	110	110	110	75	55	90	90	110	110	110	75	55	90	90	100	110	110	75
55	110	110	132	132	160	132	55	110	110	132	132	160	132	55	110	110	129	132	132	110
75	132	132	160	160	200	160	75	132	132	160	160	200	160	75	132	132	150	160	160	160
90	160	160	200	200	220	185	90	160	160	185	200	220	185	90	160	160	185	200	220	185
110	200	200	250	250	315	220	110	200	200	250	250	315	220	110	200	200	220	250	315	220
160	250	250	315	355	355	335	147	250	250	280	315	355	335	150	250	250	295	295	355	280
200	335	375	400	400	500	450	180	315	335	355	375	500	450	180	315	335	355	375	450	355
250	450	450	450	500	560	450	200	335	355	375	425	560	450	200	375	355	375	400	475	400

TeSys Giga 3-pole and 4-pole Standard contactors for load control only (non motor) – (250 to 1050 A)

Maximum current (A) (θ ≤ 40 °C)	General purpose continuous current (A)	Reference Standard version contactors AC/DC coil voltage			
		3-pole		4-pole	
IEC AC-1	UL	48…130 V	100…250 V	48…130 V	100…250 V
250	210	LC1G115EHEN	LC1G115KUEN	LC1G1154EHEN	LC1G1154KUEN
275	230	LC1G150EHEN	LC1G150KUEN	LC1G1504EHEN	LC1G1504KUEN
305	250	LC1G185EHEN	LC1G185KUEN	LC1G1854EHEN	LC1G1854KUEN
330	290	LC1G225EHEN	LC1G225KUEN	LC1G2254EHEN	LC1G2254KUEN
385	340	LC1G265EHEN	LC1G265KUEN	LC1G2654EHEN	LC1G2654KUEN
440	390	LC1G330EHEN	LC1G330KUEN	LC1G3304EHEN	LC1G3304KUEN
550	490	LC1G400EHEN	LC1G400KUEN	LC1G4004EHEN	LC1G4004KUEN
700	630	LC1G500EHEN	LC1G500KUEN	LC1G5004EHEN	LC1G5004KUEN
1050	850	LC1G630EHEN	LC1G630KUEN	LC1G6304EHEN	LC1G6304KUEN
1050	900	LC1G800EHEN	LC1G800KUEN	LC1G8004EHEN	LC1G8004KUEN

(1) Switching of IE3/IE4 high efficiency squirrel-cage motors.

Coordination tables: pages A5/7 to A5/42
Characteristics: pages B9/25 to B9/29
Dimensions: pages B9/30 to B9/32
Diagrams: page B9/34

Product references

Motor ratings (HP) UL- 3phase				Reference Standard version contactors AC/DC coil voltage 3-pole	
200/208 V	230/240 V	460/480 V	575/600 V	48-130 V	100-250 V
30	40	75	100	**LC1G115EHEN**	**LC1G115KUEN**
40	50	100	125	**LC1G150EHEN**	**LC1G150KUEN**
50	60	125	150	**LC1G185EHEN**	**LC1G185KUEN**
60	75	150	150	**LC1G225EHEN**	**LC1G225KUEN**
75	100	200	200	**LC1G265EHEN**	**LC1G265KUEN**
100	125	250	300	**LC1G330EHEN**	**LC1G330KUEN**
125	150	300	400	**LC1G400EHEN**	**LC1G400KUEN**
150	200	400	450	**LC1G500EHEN**	**LC1G500KUEN**
250	300	600	700	**LC1G630EHEN**	**LC1G630KUEN**
300	350	700	800	**LC1G800EHEN**	**LC1G800KUEN**

LAG8N113

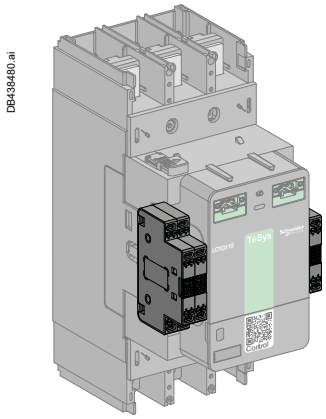

Side mounting – maximum 2 per side

Auxiliary contact modules

Auxiliary contacts give an indication of the contactor status.
They can be used for remote visual signaling, alarming, electrical locking, relay activation, etc...

Each contactor is equipped with 1 NO + 1 NC auxiliary contact block as standard.
■ Mechanically linked mirror contacts
The NC contact of the auxiliary contact block is mirror contact in conformity to IEC 60947-4-1 and it is mechanically linked to reliably represent the state of the main power contacts and wherever auxiliary contact state reliability is essential.
The main power contacts and the NC of the auxiliary contact can't be closed at the same time.

Types of connections:
■ Push-in type.

Wide contactor compatibility

TeSys Giga auxiliary contact module is compatible with the whole range of TeSys Giga High power contactors .
Each TeSys Giga Contactor can be equipped with up to 4 auxiliary contact modules.

Electrical characteristics

Characteristics	
Rated thermal current (A)	10
Minimum load	1 mA at 17 V DC
Contact reliability	Failure rate <10^{-8}

Operational power of contacts conforming to IEC 60947-5-1 - Electrical durability

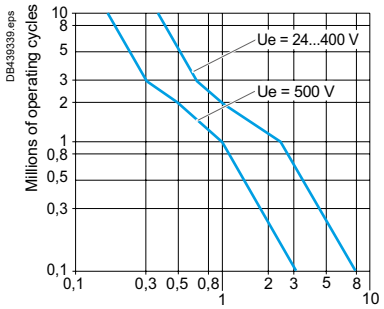

AC-15

category AC-15

Operating cycles	V	24	48	115	230	400	500
1 million	VA	60	120	280	560	800	500
2 million	VA	24	48	115	230	400	250
3 million	VA	16	32	80	160	280	150

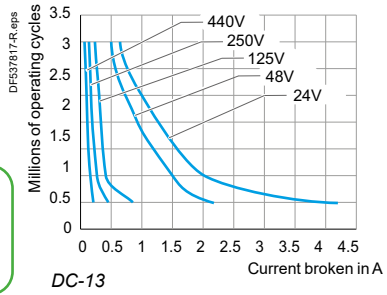

DC-13

category DC-13

Operating cycles	V	24	48	125	250	440
0.5 million	W	100	100	105	110	88
1 million	W	48	72	54	54	55
2 million	W	24	36	38	38	39
3 million	W	16	24	25	25	33

Connector characteristics				
Push-in connection - Dual input				Min/max c.s.a.
Flexible cable per input	1 conductor with cable end	mm²		0.75...2.5
	2 conductors with Dual Sleeve	mm²		0.75...2.5
	Stripping length	mm²		10
Solid cable per input	1 conductor	mm²		0.75...2.5
	Stripping length	mm		12

Auxiliary contact modules

Description	Terminal type	Position	Type of contacts	Sold in lots of	Reference
Auxiliary contact module	Push-in	1st left or right	1 NO + 1 NC	1	**LAG8N113P** (1)
			2 NO	1	**LAG8N203P**
		2nd left or right	1 NO + 1 NC	1	**LAG8N113**
			2 NO	1	**LAG8N203**

(1) Always supplied with TeSys Giga *LC1G contactors, fitted to the right side lateral face.*

Coordination tables: pages A5/7 to A5/42
Diagrams: page B9/34

Power terminals

‘Cable Memory’ connection blocks

Cables or busbars can be connected to the contactor by means of the optional cable memory connection blocks. When the contactor is removed for maintenance, the cables or busbars remain connected to these connection blocks, making reinstallation faster and easier.

PB121730.eps

LA9G3101

Cable memory [1]

Description	Compatible with contactors	Quantity Set of	Reference
‘Cable memory’ for 3-pole contactors – for holding cables in place	LC1G115...LC1G225	2	**LA9G3101**
	LC1G265...LC1G500	2	**LA9G3102**
	LC1G630...LC1G800	2	**LA9G3103**
'Cable memory' for 4-pole contactors – for holding cables in place	LC1G115...LC1G225	2	**LA9G4101**
	LC1G265...LC1G500	2	**LA9G4102**
	LC1G630...LC1G800	2	**LA9G4103**

(1) 'Cable memory' connection blocks are always supplied with Advanced contactor version.

Flexible terminal extensions

Flexible connecting bars to connect TeSys Giga High power contactors with MCCBs mounted in the same plane and orientation. These bars can be used along with Advanced or Standard version contactors. They help to get a quick and easy connection between contactor and MCCB with saving in installation time.

PB121735.eps

LA9G3111

‘Flexible terminal extensions’ for MCCBs

Description	Compatible with contactors	To connect with NSX/NS MCCBs	Quantity Set of	Reference
Flexible terminal extensions 3-pole	LC1G115…LC1G225	**NSX100...NSX250**	3	**LA9G3111**
	LC1G265…LC1G500	**NSX400…NSX630**	3	**LA9G3112**
	LC1G630…LC1G800	**NS800…NS1250**	3	**LA9G3113**
Flexible terminal extensions 4-pole	LC1G115…LC1G225	**NSX100...NSX250**	4	**LA9G4111**
	LC1G265…LC1G500	**NSX400…NSX630**	4	**LA9G4112**
	LC1G630…LC1G800	**NS800…NS1250**	4	**LA9G4113**

PB121576.eps

LA9G3601

Straight terminal extensions

Description	Suitable for	Compatible with contactors	Quantity Set of	Reference
Straight terminal extension	3P	LC1G115...LC1G225	3	**LA9G3601**
		LC1G265...LC1G500	3	**LA9G3602**
		LC1G630...LC1G800	3	**LA9G3603**
	4P	LC1G115...LC1G225	4	**LA9G4601**
		LC1G265...LC1G500	4	**LA9G4602**
		LC1G630...LC1G800	4	**LA9G4603**

PB121620.eps

LA9G3682

Right angled terminal extensions

Description	Suitable for	Compatible with contactors	Quantity Set of	Reference
Right angled side terminal extension	3P	LC1G115...LC1G225	3	**LA9G3661**
		LC1G265...LC1G500	3	**LA9G3662**
		LC1G630...LC1G800	3	**LA9G3663**
Right angled large terminal extension	3P	LC1G115...LC1G225	3	**LA9G3671**
		LC1G265...LC1G500	3	**LA9G3672**
		LC1G630...LC1G800	3	**LA9G3673**
Right angled rear terminal extension	3P	LC1G115...LC1G225	3	**LA9G3681**
		LC1G265...LC1G500	3	**LA9G3682**
		LC1G630...LC1G800	3	**LA9G3683**

PB121577.eps

LA9G3631

Edgewise terminal extensions

Description	Suitable for	Compatible with contactors	Quantity Set of	Reference
Edgewise terminal extension	3P	LC1G115...LC1G225	3	**LA9G3631**
		LC1G265...LC1G500	3	**LA9G3632**
		LC1G630...LC1G800	3	**LA9G3633**
	4P	LC1G115...LC1G225	4	**LA9G4631**
		LC1G265...LC1G500	4	**LA9G4632**
		LC1G630...LC1G800	4	**LA9G4633**

Power terminals

PB121578.eps

LA9G3611

Spreader kits

Description	Suitable for	Compatible with contactors	Increase of Pole pitch	Quantity Set of	Reference
Spreader kits	3P	LC1G115...LC1G225	35 to 45 mm	3	**LA9G3611**
		LC1G265...LC1G500	45 to 70 mm	3	**LA9G3612**
	4P	LC1G115...LC1G225	35 to 45 mm	4	**LA9G4611**
		LC1G265...LC1G500	45 to 70 mm	4	**LA9G4612**

PB121648.eps

LA9G3613

Terminal extensions for larger power connections

Description	Suitable for	Compatible with contactors	Power connection size	Quantity Set of	Reference
Terminal connections	3P	LC1G400...LC1G500	50 mm width	3	**LA9G3613**
		LC1G630...LC1G800	80 mm width	3	**LA9G3614**
	4P	LC1G400...LC1G500	50 mm width	4	**LA9G4613**
		LC1G630...LC1G800	80 mm width	4	**LA9G4614**

PB121651.eps

LA9G4711

Spreader kits suitable for box type connectors

Description	Suitable for	Compatible with contactors	Increase of Pole pitch	Suitable for box connectors	Quantity Set of	Reference
Spreader kits for box connectors	3P	LC1G115...LC1G225	35 to 45 mm	DZ2FJ1/FH1 & AL400	3	**LA9G3711**
		LC1G265...LC1G500	45 to 70 mm	DZ2FJ1/FK1 & AL400/AL600	3	**LA9G3712**
		LC1G630...LC1G800	70 to 80 mm	DZ2FL1/FK1 & Type S/AL600	3	**LA9G3714**
	4P	LC1G115...LC1G225	35 to 45 mm	DZ2FJ1/FH1 & AL400	4	**LA9G4711**
		LC1G265...LC1G500	45 to 70 mm	DZ2FJ1/FK1 & AL400/AL600	4	**LA9G4712**
		LC1G630...LC1G800	70 to 80 mm	DZ2FL1/FK1 & Type S/AL600	4	**LA9G4714**

Power terminal accessories

PB121603.eps
LA9G4803

Phase separators

Description	Suitable for	Compatible with contactors	Quantity Set of	Reference
Phase separators (1)	3P	LC1G115...LC1G800	2	**LA9G3801**
	4P	LC1G115...LC1G800	3	**LA9G4801**
	3P – with 50/80 mm spreaders	LC1G400...LC1G800	2	**LA9G3803** (2)
	4P – with 50/80 mm spreaders	LC1G400...LC1G800	3	**LA9G4803** (3)

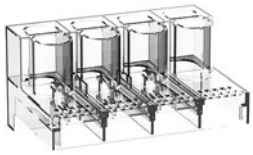
PB121666.eps
LA9G4701

Terminal shrouds

Description	Compatible with contactors	Quantity Set of	Reference 3P	Reference 4P
IP 20 Terminal shrouds (1)	LC1G115...LC1G225	1	**LA9G3701**	**LA9G4701**
	LC1G265...LC1G500	1	**LA9G3702**	**LA9G4702**
	LC1G630...LC1G800	1	**LA9G3703**	**LA9G4703**

IP20 Lug cover for connection kits (4)

Lug covers are used along with IP 20 terminal shrouds and star-delta, reverser and changeover connection kit assemblies to improve insulation of the coupling bars and achieve IP 20 for the complete assembly.

PB121621.eps
LA9G4707

IP20 Lug cover for connection kits

Description	Suitable for	Compatible with contactors	Quantity Set of	Reference
IP 20 Lug cover	3P	LC1G115...LC1G800 (4)	6	**LA9G3707**
	4P	LC1G115...LC1G800 (4)	8	**LA9G4707**

PB121586.eps
LV429252

Lugs for cable set

Description	Compatible with contactors	Cable section	Reference Set of 3 for 3P	Reference Set of 4 for 4P
Lugs for cable	LC1G115...LC1G225	120 mm²	**LV429252**	**LV429256**
	LC1G115...LC1G225	150 mm²	**LV429253**	**LV429257**
	LC1G115...LC1G225	185 mm²	**LV429254**	**LV429258**
	LC1G265...LC1G500	240 mm²	**LV432500**	**LV432501**
	LC1G265...LC1G500	300 mm²	**LV432502**	**LV432503**

PB121605.eps
LA9GQQ330

Star-Delta (Wye-Delta) connection kits (5)

Description	Suitable for	for Line (KM2) and Delta (KM3) contactor	+ Star contactor (KM1)	Reference
Connection kit: bars for Line-Delta-Star contactor assembly	3P	LC1G115...LC1G225	LC1G115...LC1G225	**LA9GQQ330**
		LC1G265...LC1G500	LC1G115...LC1G225	**LA9GSQ330**
		LC1G265...LC1G500	LC1G265...LC1G500	**LA9GSS330**
		LC1G630...LC1G800	LC1G265...LC1G500	**LA9GTS330**
		LC1G630...LC1G800	LC1G630...LC1G800	**LA9GTT330**
	with cable memory kit 3P	LC1G265...LC1G500	LC1G115...LC1G225	**LA9GSQ331**
		LC1G630...LC1G800	LC1G265...LC1G500	**LA9GTS331**

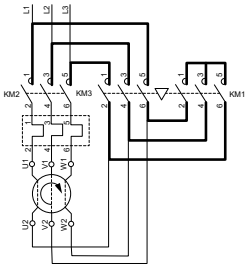

DB438328.ai

Star (Wye) connection kits (5)

Description	Suitable for	Star contactor (KM1)	Reference
Connection kit for star contactor	3P	LC1G115...LC1G225	**LA9GQW601**
		LC1G265...LC1G500	**LA9GSW601**
		LC1G630...LC1G800	**LA9GTW601**

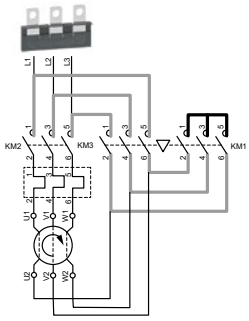

PB123974.ai

*Note: **RE17RMMWS** timer to be used for Star-Delta starter application.*

(1) Either phase separators or terminal shrouds can only be mounted. Phase separators or terminal shrouds are mandatory for operational voltage, Ue ≥ 690 V.
*(2) To be used with **LA9G3613** and **LA9G3614**.*
*(3) To be used with **LA9G4613** and **LA9G4614**.*
*(4) **LC1G630** & **LC1G800** contactors need 2 pcs. of IP20 covers per pole. So **2 x LA9G3707** or **2 x LA9G4707** need to be ordered for these contactor assemblies. Please contact your technical support for more details.*
(5) UL listed.
(6) Maximum 3 auxiliary contacts can be installed between 2 contactors with mechanical interlock kit.

LA9G970

Mechanical interlock

Description	Suitable for	Compatible with contactors		Reference
		Contactor 1	Contactor 2	
Mechanical interlock between contactors [6]	3P and 4P	LC1G115...225	LC1G115...225	**LA9G970**
		LC1G265...500	LC1G265...500	**LA9G970**
		LC1G265...500	LC1G115...225	**LA9G971**
	3P	LC1G630...800	LC1G265...500	**LA9G972**
		LC1G630...800	LC1G630...800	**LA9G973**

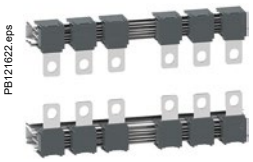

LA9G3760

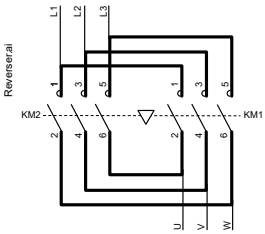

Reverser connection kits

Description	Suitable for	Compatible with contactors	Reference
Connection kit: bars for reverser contactor assembly	3P	LC1G115...LC1G225	**LA9G3760**
		LC1G265...LC1G500	**LA9G3761**
		LC1G630...LC1G800	**LA9G3762**

LA9G3750

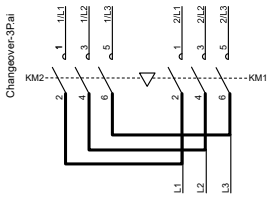

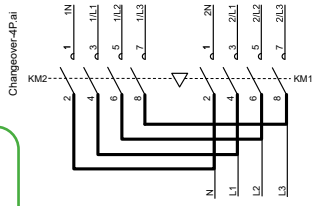

Changeover connection kits

Description	Suitable for	Compatible with contactors	Reference
Connection kit: bars for changeover contactor assembly	3P	LC1G115...LC1G225	**LA9G3750**
		LC1G265...LC1G500	**LA9G3751**
		LC1G630...LC1G800	**LA9G3752**
	4P	LC1G115...LC1G225	**LA9G4750**
		LC1G265...LC1G500	**LA9G4751**
		LC1G630...LC1G800	**LA9G4752**

RE17RMMWS

Modular timer relay for star-delta starters

- 8 A, 1 CO, multifunction with spring terminals, 12...240 V AC/DC
- 17.5 mm width same size as a 1-pole circuit breaker
- Covers 0.1 s to 100 h timing
- Transparent cover to protect settings from being tampered
- Multi functional gives flexibility in maintenance

Modular timer relay for star-delta starters

Description	Suitable for	Compatible with contactors	Reference
Harmony, Modular timing relay	3P	LC1G115...LC1G800	**RE17RMMWS**

Life Is On Schneider Electric

PB121741.eps

LA9GRFB1

PB121742.eps

LA9GRFB2

PB121743.eps

LA9GRFB3

Retrofit bases

- Suitable for 3 pole contactors
- Retrofit bases to replace similar ratings of TeSys F contactors with TeSys Giga High power contactors
- Enables quick and simple replacement in the existing installation
- 3 references to cover ranges from LC1F115 to F800

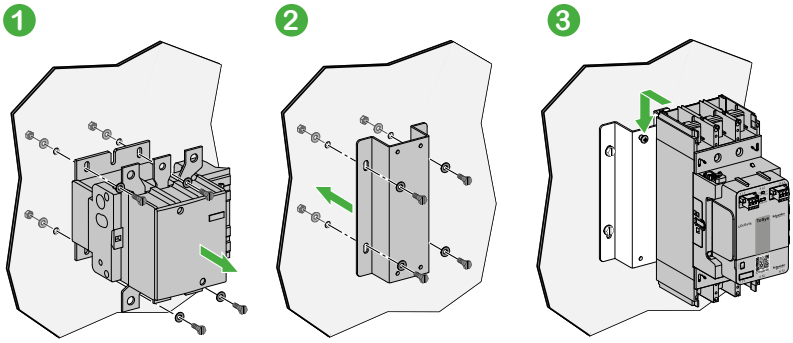

Remove
TeSys F contactor

Install
Retrofit base

Mount TeSys Giga Contactor
on Retrofit base

TeSys Giga retrofit bases are designed for integrating new TeSys Giga High power contactors into installations using TeSys F contactors. The retrofit bases help reduce replacement and reinstallation time when you upgrade your system with the new range of contactors. The bases come in two frame sizes.

Retrofit bases

Description		Reference
Accessory used to replace TeSys F contactors	LC1F115-225 replaced by LC1G115-225	**LA9GRFB1**
	LC1F265-500 replaced by LC1G265-500	**LA9GRFB2**
	LC1F630-800 replaced by LC1G630-800	**LA9GRFB3**

Dimensions/mounting:
page B9/33

Control module

LX1G3QLSEA

Wide band electronic control
24 V…500 V 50/60 Hz or DC control input
Advanced and standard versions
Accessible from the front for easy and quick replacement

The control module is needed for the operation of the contactor.
It performs the following functions:
- proper functioning of contactor based on the input control voltage
- monitoring and diagnostics of the pole condition
- generation of signaling commands.

The range of control modules is organized:
- per contactor size and for each rating,
- per control voltage range.

Each module has connectors for connecting:
- the coil control A1, A2 circuit & PLC output control (advanced version)
- pole status and diagnostic signaling circuits.

Control module replacement on a 3-pole contactor

Control modules

Description		For contactors	References per voltage range (V AC/DC)		
			24 - 48	48 - 130	200 - 500
Control modules for Advanced contactors	3-pole	LC1G115...LC1G225	**LX1G3QBEEA**	**LX1G3QEHEA**	**LX1G3QLSEA**
		LC1G265...LC1G330	**LX1G3RBEEA**	**LX1G3REHEA**	**LX1G3RLSEA**
		LC1G400...LC1G500	**LX1G3SBEEA**	**LX1G3SEHEA**	**LX1G3SLSEA**
		LC1G630...LC1G800	**-**	**LX1G3TEHEA**	**LX1G3TLSEA**
	4-pole	LC1G115...LC1G225	**LX1G4QBEEA**	**LX1G4QEHEA**	**LX1G4QLSEA**
		LC1G265...LC1G330	**LX1G4RBEEA**	**LX1G4REHEA**	**LX1G4RLSEA**
		LC1G400...LC1G500	**LX1G4SBEEA**	**LX1G4SEHEA**	**LX1G4SLSEA**
		LC1G630...LC1G800	**-**	**LX1G4TEHEA**	**LX1G4TLSEA**
			48 - 130	**100 - 250**	
Control modules for Standard contactors	3-pole	LC1G115...LC1G225	**LX1G3QEHEN**	**LX1G3QKUEN**	
		LC1G265...LC1G330	**LX1G3REHEN**	**LX1G3RKUEN**	
		LC1G400...LC1G500	**LX1G3SEHEN**	**LX1G3SKUEN**	
		LC1G630...LC1G800	**LX1G3TEHEN**	**LX1G3TKUEN**	
	4-pole	LC1G115...LC1G225	**LX1G4QEHEN**	**LX1G4QKUEN**	
		LC1G265...LC1G330	**LX1G4REHEN**	**LX1G4RKUEN**	
		LC1G400...LC1G500	**LX1G4SEHEN**	**LX1G4SKUEN**	
		LC1G630...LC1G800	**LX1G4TEHEN**	**LX1G4TKUEN**	

LA9G81

Connector for control module

Description	Reference
Push-in terminal connector for control module	**LA9G81**

LA9GRD10

Remote wear diagnostic (RWD) module

Description	Reference
Remote wear diagnostic module for TeSys Giga Contactor - 1 NO	**LA9GRD10** (1)
Remote wear diagnostic module for TeSys Giga Contactor - 1 NC	**LA9GRD01** (1)

(1) Remote Wear Diagnostic (RWD) Module, can be installed and used only on Advanced version.

PB121588.eps

Switching module kits

Replaceable switching modules

- Innovative contact switching modules for TeSys Giga High power contactors
- Replace worn-out poles with a new switching module in minutes, without having to disassemble the whole product
- No special tools are needed for the replacement.

TeSys Giga - Switching modules for TeSys Giga High power contactors , Advanced and Standard versions

Description	For contactors		Quantity Set of	Reference
3 or 4 switching module kits	3-pole	LC1G115...LC1G225	3	**LA9G3QA**
		LC1G265...LC1G330	3	**LA9G3RA**
		LC1G400...LC1G500	3	**LA9G3SA**
		LC1G630...LC1G800	3	**LA9G3TA**
	4-pole	LC1G115...LC1G225	4	**LA9G4QA**
		LC1G265...LC1G330	4	**LA9G4RA**
		LC1G400...LC1G500	4	**LA9G4SA**
		LC1G630...LC1G800	4	**LA9G4TA**

Note: *In the event of replacement, replace all switching modules. After replacement, change the position of RESET button on the control module from A to B or B to A.*

Product references

LA9G3101	LA9G3TA	LA9GTT330	LC1G265BEEA	LC1G800LSEA
LA9G3102	LA9G4101	LAG8N113	LC1G265EHEA	LV429252
LA9G3103	LA9G4102	LAG8N113P	LC1G265EHEN	LV429253
LA9G3111	LA9G4103	LAG8N203	LC1G265KUEN	LV429254
LA9G3112	LA9G4111	LAG8N203P	LC1G265LSEA	LV429256
LA9G3113	LA9G4112	LC1G1154BEEA	LC1G3304BEEA	LV429257
LA9G3601	LA9G4113	LC1G1154EHEA	LC1G3304EHEA	LV429258
LA9G3602	LA9G4601	LC1G1154EHEN	LC1G3304EHEN	LV432500
LA9G3603	LA9G4602	LC1G1154KUEN	LC1G3304KUEN	LV432501
LA9G3611	LA9G4603	LC1G1154LSEA	LC1G3304LSEA	LV432502
LA9G3612	LA9G4611	LC1G115BEEA	LC1G330BEEA	LV432503
LA9G3613	LA9G4612	LC1G115EHEA	LC1G330EHEA	LX1G3QBEEA
LA9G3614	LA9G4613	LC1G115EHEN	LC1G330EHEN	LX1G3QEHEA
LA9G3631	LA9G4614	LC1G115KUEN	LC1G330KUEN	LX1G3QEHEN
LA9G3632	LA9G4631	LC1G115LSEA	LC1G330LSEA	LX1G3QKUEN
LA9G3633	LA9G4632	LC1G1504BEEA	LC1G4004BEEA	LX1G3QLSEA
LA9G3650	LA9G4633	LC1G1504EHEA	LC1G4004EHEA	LX1G3RBEEA
LA9G3651	LA9G4701	LC1G1504EHEN	LC1G4004EHEN	LX1G3REHEA
LA9G3652	LA9G4702	LC1G1504KUEN	LC1G4004KUEN	LX1G3REHEN
LA9G3653	LA9G4703	LC1G1504LSEA	LC1G4004LSEA	LX1G3RKUEN
LA9G3661	LA9G4707	LC1G150BEEA	LC1G400BEEA	LX1G3RLSEA
LA9G3662	LA9G4711	LC1G150EHEA	LC1G400EHEA	LX1G3SBEEA
LA9G3663	LA9G4712	LC1G150EHEN	LC1G400EHEN	LX1G3SEHEA
LA9G3671	LA9G4714	LC1G150KUEN	LC1G400KUEN	LX1G3SEHEN
LA9G3672	LA9G4750	LC1G150LSEA	LC1G400LSEA	LX1G3SKUEN
LA9G3673	LA9G4751	LC1G1854BEEA	LC1G5004BEEA	LX1G3SLSEA
LA9G3681	LA9G4752	LC1G1854EHEA	LC1G5004EHEA	LX1G3TEHEA
LA9G3682	LA9G4801	LC1G1854EHEN	LC1G5004EHEN	LX1G3TEHEN
LA9G3683	LA9G4803	LC1G1854KUEN	LC1G5004KUEN	LX1G3TKUEN
LA9G3701	LA9G4QA	LC1G1854LSEA	LC1G5004LSEA	LX1G3TLSEA
LA9G3702	LA9G4RA	LC1G185BEEA	LC1G500BEEA	LX1G4QBEEA
LA9G3703	LA9G4SA	LC1G185EHEA	LC1G500EHEA	LX1G4QEHEA
LA9G3704	LA9G4TA	LC1G185EHEN	LC1G500EHEN	LX1G4QEHEN
LA9G3705	LA9G81	LC1G185KUEN	LC1G500KUEN	LX1G4QKUEN
LA9G3706	LA9G82	LC1G185LSEA	LC1G500LSEA	LX1G4QLSEA
LA9G3707	LA9G970	LC1G2254BEEA	LC1G6304EHEA	LX1G4RBEEA
LA9G3711	LA9G971	LC1G2254EHEA	LC1G6304EHEN	LX1G4REHEA
LA9G3712	LA9G972	LC1G2254EHEN	LC1G6304KUEN	LX1G4REHEN
LA9G3714	LA9G973	LC1G2254KUEN	LC1G6304LSEA	LX1G4RKUEN
LA9G3750	LA9GQQ330	LC1G2254LSEA	LC1G630EHEA	LX1G4RLSEA
LA9G3751	LA9GRD01	LC1G225BEEA	LC1G630EHEN	LX1G4SBEEA
LA9G3752	LA9GRD10	LC1G225EHEA	LC1G630KUEN	LX1G4SEHEA
LA9G3760	LA9GRFB1	LC1G225EHEN	LC1G630LSEA	LX1G4SEHEN
LA9G3761	LA9GRFB2	LC1G225KUEN	LC1G8004EHEA	LX1G4SKUEN
LA9G3762	LA9GRFB3	LC1G225LSEA	LC1G8004EHEN	LX1G4SLSEA
LA9G3801	LA9GSQ330	LC1G2654BEEA	LC1G8004KUEN	LX1G4TEHEA
LA9G3803	LA9GSQ331	LC1G2654EHEA	LC1G8004LSEA	LX1G4TEHEN
LA9G3QA	LA9GSS330	LC1G2654EHEN	LC1G800EHEA	LX1G4TKUEN
LA9G3RA	LA9GTS330	LC1G2654KUEN	LC1G800EHEN	LX1G4TLSEA
LA9G3SA	LA9GTS331	LC1G2654LSEA	LC1G800KUEN	

This document is current. Click on the product reference to get the most recent availability status (hyperlink to **se.com** product datasheet).
If your product variant is no longer available, please consult your distributor or regional sales office.

Life Is On Schneider Electric

TeSys Control - Giga

Technical Data for Designers

High power contactors

Contents

TeSys Giga High power contactors:
> Characteristics ..... B9/25 to B9/29
> Dimensions ..... B9/30 to B9/33
> Diagrams B9/34

Life Is On Schneider Electric

Characteristics

Environment

Contactor type				LC1G115… 225	LC1G265… 500	LC1G630… 800
Rated insulation voltage (Ui)	Conforming to IEC 60947-4-1. Over-voltage category III, degree of pollution: 3		V	1000	1000	1000
Rated impulse withstand voltage (Uimp)	Coil not connected to the power circuit		kV	8	8	8
Conforming to standards				IEC/EN 60947-4-1, UL 60947-4-1, CSA C22.2 n° 60947-4-1, JIS C 8201-4-1, GB/T 14048.4, IEC 60721-3-3 3C3		
Product certifications				CB scheme, CCC, cULus, UKCA, EAC, EU-RO-MR by DNV		
Electromagnetic compatibility				IEC 60947-4-1		
Immunity				Following IEC 60947-4-1 Table 16		
Emission				Environment A according to IEC 60947-4-1		
Immunity to radiated electromagnetic interference				20V/m according to IEC/EN 61000-4-3		
Voltage sag immunity (in complete product as well)				Conforming to SEMI-F47		
Degree of protection	Conforming to IEC 60529 / VDE 0106			IP2x with terminal shrouds LA9G37●●/ LA9G47●●		
Climatic withstand				According to IACS E10		
Ambient air temperature around the device	Storage		°C	-60…+80		
	Operation		°C	-25…+60		
	Permissible at Uc		°C	-40…+70		
Net weight	Standard	3P	kg	3.5	7	14.2
		4P	kg	4.2	8.3	18
	Advanced	3P	kg	4.1	7.8	17.3
		4P	kg	5.1	8.9	22
Maximum operating altitude	Without derating		m	3000		
Operating positions	Without derating			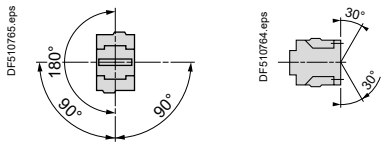		
	With derating (1)					
Shock resistance 1/2 sine wave = 11 ms Conforming to IEC 60068-2-27	Contactor open			10 gn	10 gn	10 gn
	Contactor closed			15 gn	15 gn	15 gn
Vibration resistance 5…300 Hz Conforming to IEC 60068-2-6	Contactor open			2 gn	2 gn	2 gn
	Contactor closed			4 gn	4 gn	4 gn

(1) For derating details, please contact technical support.

COORD.
Ref.
High power contactors

Characteristics

Pole characteristics

Contactor type				LC1G115	LC1G150	LC1G185	LC1G225
Number of poles				3 or 4	3 or 4	3 or 4	3 or 4
Rated operational current (Ie)	Ue ≤ 440 V	In AC-3 / AC-3e, θ ≤ 60 °C	A	115 / 115	150 / 145	185 / 177	225 / 209
	Ue ≤ 1000 V	In AC-1, θ ≤ 40 °C	A	250	275	305	330
Rated operational voltage (Ue)	Up to		V	1000 (1)	1000	1000	1000
Rated frequency (f) (2)			Hz	50 / 60	50 / 60	50 / 60	50 / 60
Frequency operating limits	With derating (3)		Hz	16 2/3 …400	16 2/3 …400	16 2/3 …400	16 2/3 …400
Conventional thermal current	θ ≤ 40 °C		A	250	275	305	330
Rated making capacity	I rms conforming to IEC 60947-4-1		A	Making current: 10 x I in AC-3 or 12 x I in AC-4 Making current: 13 x I in AC-3e			
Rated breaking capacity	I rms conforming to IEC 60947-4-1		A	Making and breaking current: 8 x I in AC-3 or 10 x I in AC-4 Making and breaking current: 8.5 x I in AC-3e			
Maximum permissible current No current flowing for previous 60 minutes, at θ ≤ 40 °C	For 10 s		A	1100	1200	1500	1800
	For 30 s		A	640	700	920	1000
	For 1 min		A	520	600	740	850
	For 3 min		A	400	450	500	560
	For 10 min		A	320	350	400	440
Short-circuit protection by fuses	Fuses for motor: type aM - Ue ≤ 440 V		A	125	160	200	250
	Fuses for motor: type aM - Ue ≤ 690 V		A	125	160	160	200
	Fuses for general application: type gG - Ue ≤ 690 V		A	315	315	315	400
Average impedance per pole	At Ith and 50 Hz		mΩ	0.18	0.18	0.17	0.15
Power dissipation per pole for the above operational currents	AC-3 / AC-3e		W	3	5	6	8
	AC-1		W	10	10	20	20
Connection				Maximum c.s.a.			
	Bar	Number of bars		2	2	2	2
		Bar	mm	25 x 6	25 x 6	25 x 6	25 x 6
	Cable with lug		mm²	185	185	185	185
	Cable with connector		mm²	185	185	185	185
	Bolt diameter		mm	Ø8.5	Ø8.5	Ø8.5	Ø8.5
Tightening torque	Power circuit connections		N.m	18	18	18	18

(1) Ue ≤ 1000 V for AC-1 / Ue ≤ 690 V for AC-3 / AC-3e / AC-4.
(2) Please consult your technical support team for application with frequencies other than 50/60 Hz.
(3) For derating details, please contact technical support.

Characteristics

Pole characteristics

LC1G265	LC1G330	LC1G400	LC1G500	LC1G630	LC1G800
3 or 4	3 or 4	3 or 4	3 or 4	3 or 4	3 or 4
265 / 255	330 / 294	400 / 391	500 / 437	630 / 555	800 / 587
385	440	550	700	1050	1050
1000	1000	1000	1000	1000	1000
50 / 60	50 / 60	50 / 60	50 / 60	50 / 60	50 / 60
16 2/3…400	16 2/3…400	16 2/3…400	16 2/3…400	16 2/3…400	16 2/3…400
385	440	550	700	1050	1050
Making current: 10 x I in AC-3 or 12 x I in AC-4 Making current: 13 x I in AC-3e					
Making and breaking current: 8 x I in AC-3 or 10 x I in AC-4 Making and breaking current: 8.5 x I in AC-3e					
2200	2650	3600	4000	5050	5500
1230	1800	2400	2800	4400	4600
950	1300	1700	2200	3400	3600
620	900	1200	1500	2200	2600
480	750	1000	1200	1600	1700
315	400	500	500	630	800
250	250	315	400	500	630
400	500	630	800	1250	1250
0.144	0.144	0.1	0.08	0.065	0.065
11	16	16	20	26	42
20	30	30	40	70	70
Maximum c.s.a.					
2	2	2	2	2	2
30 x 10	30 x 10	30 x 10	30 x 10	50 x 10	50 x 10
240	2 x 150	2 x 185	2 x 240	-	-
240	-	-	-	-	-
Ø10.6	Ø10.6	Ø10.6	Ø10.6	Ø13	Ø13
35	35	35	35	58	58

TeSys Giga High power contactors - Advanced version - Control circuit characteristics with AC/DC coils

Contactor type					LC1G115…225	LC1G265…330	LC1G400…500	LC1G630…800
Rated control circuit voltage (Uc)				**V**	24...48 AC/DC, 48...130 AC/DC, 200...500 AC/DC [1]			
Control voltage limits (θ ≤ 60 °C)	AC input (50/60 Hz) [2] /DC input	Operation			0.8 Uc Min...1.1 Uc Max			
		Drop-out			0.1 Uc Max...0.45 Uc Min			
Inputs compatibility PLC digital output 24 V DC Type 3 IEC61131-2		Off-state		**V DC**	0…5			
		On-state		**V DC**	11…30			
Average consumption at 20 °C and at Uc (3 and 4-pole contactors)	24…48 V AC/DC coil (BEE)	Inrush	50/60 Hz coil	**VA**	290	540	490	-
			DC	**W**	220	380	350	-
		Sealed	50/60 Hz coil	**VA**	10	17.9	17.9	-
			DC	**W**	5.7	6.4	6	-
	48...130 V AC/DC coil (EHE)	Inrush	50/60, 400 Hz coil	**VA**	260	430	450	560
			DC	**W**	190	360	360	440
		Sealed	50/60, 400 Hz coil	**VA**	8.9	11.7	11.7	12
			DC	**W**	5	9	8.3	8.8
	200…500 V AC/DC coil (LSE)	Inrush	50/60 Hz coil	**VA**	295	530	535	670
			DC	**W**	215	300	300	390
		Sealed	50/60 Hz coil	**VA**	13	16.1	15.4	17
			DC	**W**	8	9	8.6	11
Heat dissipation				**W**	4…5	5…6	5…6	5…6
Operating time	Closing "C"			**ms**	40...70	40...70	40...70	40...70
	Opening "O"			**ms**	15...50	15...50	15...50	15...50
Mechanical durability at Uc	In millions of operating cycles (max)				8	8	8	5
Maximum operating rate at ambient temperature ≤ 60 °C	In operating cycles per hour	AC-1			300	300	300	300
		AC-3/AC-3e			600	600	600	600
		AC-4			150	150	60	60
Coil control and PLC input connection (Push-in type)					Min/max c.s.a.			
Flexible cable	1 conductor with cable end			**mm²**	0.25...2.5	0.25...2.5	0.25...2.5	0.25...2.5
	2 conductors with Dual Sleeve			**mm²**	0.5...1	0.5...1	0.5...1	0.5...1
Solid cable	1 conductor			**mm²**	0.2...2.5	0.2...2.5	0.2...2.5	0.2...2.5
	Stripping length			**mm**	12	12	12	12

(1) 24...48 V AC/DC control voltage option is available for LC1G115...LC1G500 ratings.
(2) AC input (50/60, 400 Hz)/DC input is available for EHE advanced coil.

Characteristics

TeSys Giga High power contactors - Standard version control circuit characteristics with AC/DC coils

Contactor type					LC1G115…225	LC1G265…330	LC1G400…500	LC1G630…800
Rated control circuit voltage (Uc)				V	48...130 AC/DC, 100...250 AC/DC			
Control voltage limits (θ ≤ 60 °C)	AC input (50/60 Hz) /DC input	Operation			0.8 Uc Min...1.1 Uc Max [1]			
		Drop-out			0.1 Uc Max...0.45 Uc Min			
Average consumption at 20 °C and at Uc (3 and 4-pole contactors)	48...130 V AC/DC coil (EHE)	Inrush	50/60 Hz coil	VA	640	780	965	990
			DC	W	445	695	760	790
		Sealed	50/60 Hz coil	VA	17.7	17.6	17.6	17.7
			DC	W	7.8	7.8	7.8	9.5
	100...250 V AC/DC coil (KUE)	Inrush	50/60 Hz coil	VA	540	700	750	800
			DC	W	380	645	660	680
		Sealed	50/60 Hz coil	VA	12.4	15	15.5	15
			DC	W	7.8	9.1	9.3	9.5
Heat dissipation				W	5…6	6…7	6…7	6…7
Operating time	Closing "C"			ms	40...70	40...70	40...70	40...70
	Opening "O"			ms	15...50	15...50	15...50	15...50
Mechanical durability at Uc	In millions of operating cycles (max)				8	8	8	5
Maximum operating rate at ambient temperature ≤ 60 °C	In operating cycles per hour		AC-1		300	300	300	300
			AC-3/AC-3e		600	600	600	600
			AC-4		150	150	60	60
Coil control connection (Push-in type)					Min/max c.s.a.			
Flexible cable	1 conductor with cable end			mm²	0.25...2.5	0.25...2.5	0.25...2.5	0.25...2.5
	2 conductors with Dual Sleeve			mm²	0.5...1	0.5...1	0.5...1	0.5...1
Solid cable	1 conductor			mm²	0.2...2.5	0.2...2.5	0.2...2.5	0.2...2.5
	Stripping length			mm	12	12	12	12

(1) 0.7 Uc Min for 110 V DC input (with KUE coil).

Dimensions

Advanced LC1G115...225 TeSys Giga High power contactors

3-pole

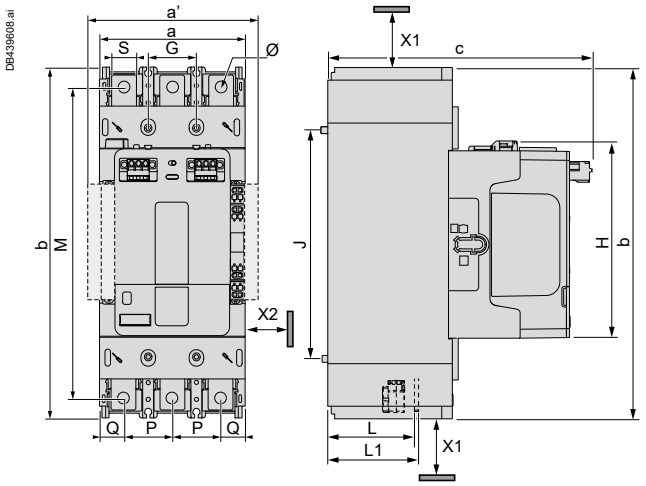

All dimensions are in mm.

a	b	c	G	J	M	H	L	L1	P	Q	S	Ø
107.7	254.7	192.9	35	166	225.7	144.1	63.9	66.9	35	18.9	18	8.5

4-pole

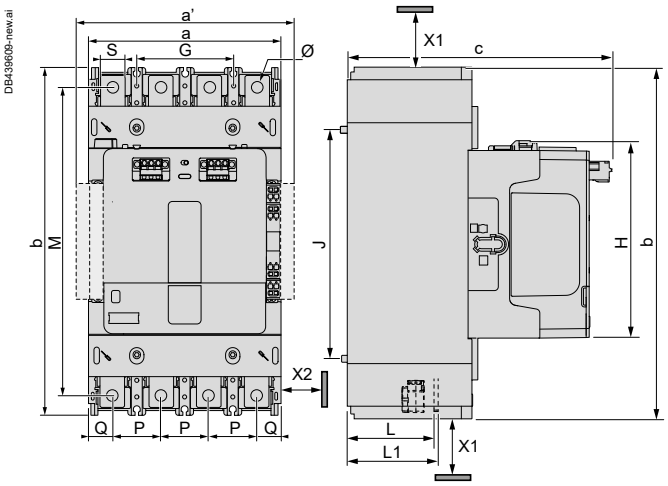

All dimensions are in mm.

a	b	c	G	J	M	H	L	L1	P	Q	S	Ø
142.7	254.7	192.9	70	166	225.7	144.1	63.9	66.9	35	18.9	18	8.5

X1 (mm) = Minimum electrical clearance.
LC1G115…800, up to 1000 V: 40 mm
X2 (mm) = Minimum electrical clearance according to operating voltage inside metallic cabinets / adjacent installation of contactors.
LC1G115…800: 5 mm.

a' = a + 20 mm with additional auxiliary contact blocks on both sides (externally).

Standard LC1G115...225 TeSys Giga High power contactors

3-pole

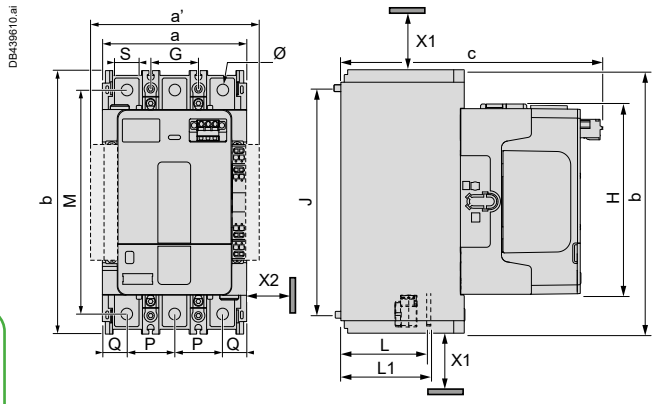

All dimensions are in mm.

a	b	c	G	J	M	H	L	L1	P	Q	S	Ø
107.7	193	192.9	35	166	164.1	139.4	66.9	69.9	35	18.9	18	8.5

4-pole

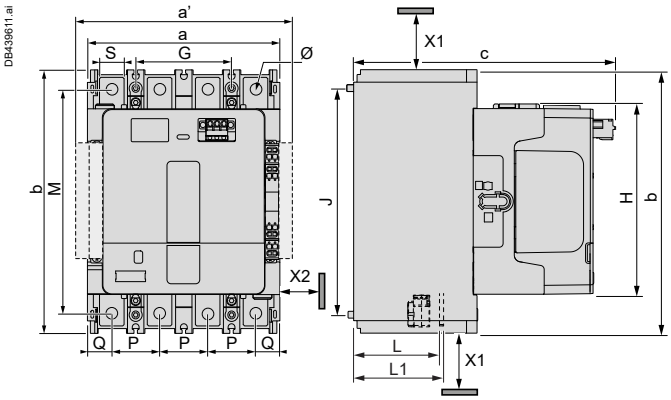

All dimensions are in mm.

a	b	c	G	J	M	H	L	L1	P	Q	S	Ø
142.7	193	192.9	70	166	164.1	139.4	66.9	69.9	35	18.9	18	8.5

X1 (mm) = Minimum electrical clearance.
LC1G115…800, up to 1000 V: 40 mm
X2 (mm) = Minimum electrical clearance according to operating voltage inside metallic cabinets / adjacent installation of contactors.
LC1G115…800: 5 mm.

a' = a + 20 mm with additional auxiliary contact blocks on both sides (externally).

References:
pages B9/10 to B9/21
Characteristics:
pages B9/25 to B9/29
Diagrams:
page B9/34

Dimensions

Advanced LC1G265...500 TeSys Giga High power contactors

3-pole

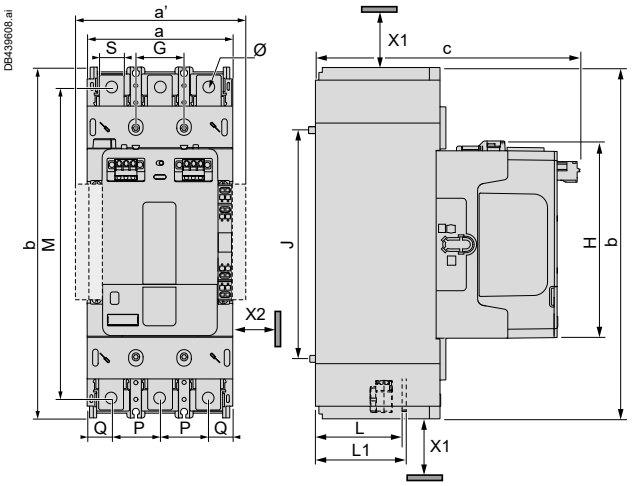

All dimensions are in mm.

a	b	c	G	J	M	H	L	L1	P	Q	S	Ø
140	290	225.5	45	187	261.6	166.7	72.8	78.8	45	25	30	10.6

4-pole

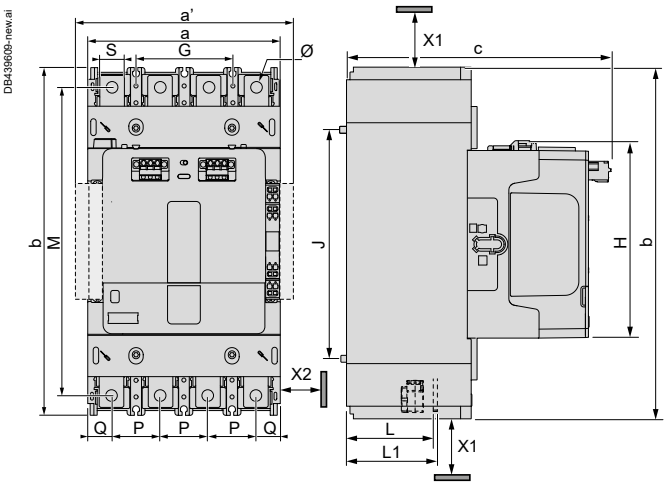

All dimensions are in mm.

a	b	c	G	J	M	H	L	L1	P	Q	S	Ø
185	290	225.5	90	187	261.6	166.7	72.8	78.8	45	25	30	10.6

X1 (mm) = Minimum electrical clearance.
LC1G115…800, up to 1000 V: 40 mm.
X2 (mm) = Minimum electrical clearance according to operating voltage inside metallic cabinets / adjacent installation of contactors.
LC1G115…800: 5 mm.

a' = a + 20 mm with additional auxiliary contact blocks on both sides (externally).

Standard LC1G265...500 TeSys Giga High power contactors

3-pole

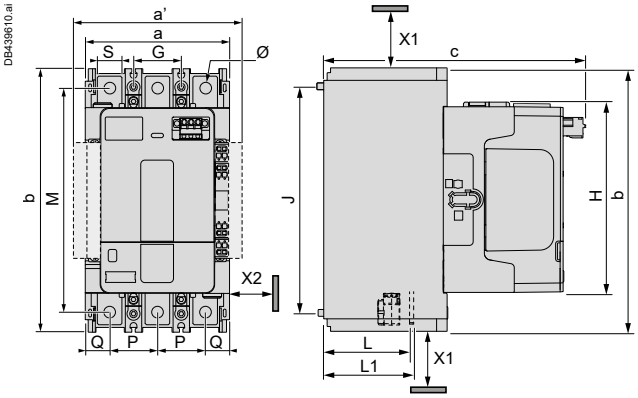

All dimensions are in mm.

a	b	c	G	J	M	H	L	L1
140	225	225.5	45	187	197	161.8	78.8	LC1G265-330: 81.8 LC1G400: 82.8 LC1G500: 83.8

P	Q	S	Ø
45	25	30	10.6

4-pole

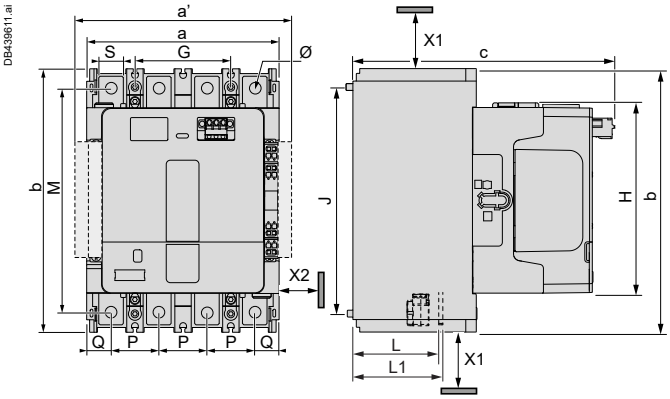

All dimensions are in mm.

a	b	c	G	J	M	H	L	L1
185	225	225.5	90	187	197	161.8	78.8	LC1G265-330: 81.8 LC1G400: 82.8 LC1G500: 83.8

P	Q	S	Ø
45	25	30	10.6

X1 (mm) = Minimum electrical clearance.
LC1G115…800, up to 1000 V: 40 mm.
X2 (mm) = Minimum electrical clearance according to operating voltage inside metallic cabinets / adjacent installation of contactors.
LC1G115…800: 5 mm.

a' = a + 20 mm with additional auxiliary contact blocks on both sides (externally).

References:
pages B9/10 to B9/21
Characteristics:
pages B9/25 to B9/29
Diagrams:
page B9/34

Dimensions

Advanced LC1G630...800 TeSys Giga High power contactors

3-pole

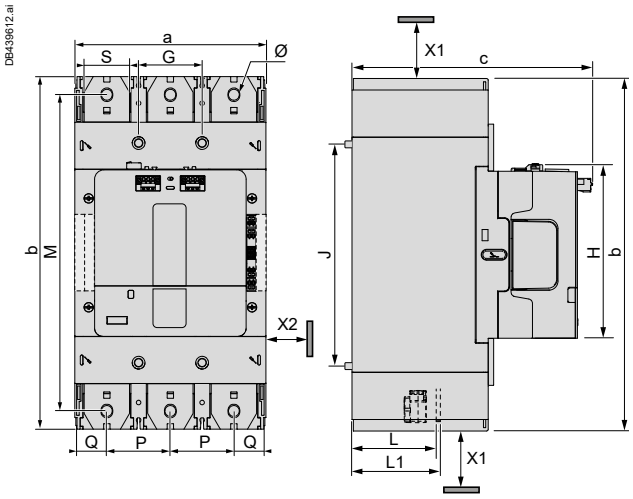

All dimensions are in mm.

a	b	c	G	J	M	H	L	L1	P	Q	S	Ø
210.6	388.5	265.6	70	242	348.5	192.1	99	107	70	35.3	48	13

4-pole

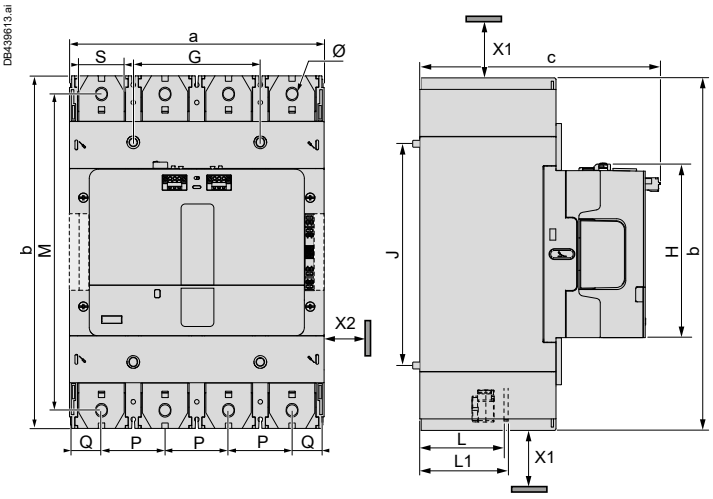

All dimensions are in mm.

a	b	c	G	J	M	H	L	L1	P	Q	S	Ø
280.6	388.5	265.6	140	242	348.5	192.1	99	107	70	35.3	48	13

X1 (mm) = Minimum electrical clearance.
LC1G115…800, up to 1000 V: 40 mm.
X2 (mm) = Minimum electrical clearance according to operating voltage inside metallic cabinets / adjacent installation of contactors.
LC1G115…800: 5 mm.

Standard LC1G630...800 TeSys Giga High power contactors

3-pole

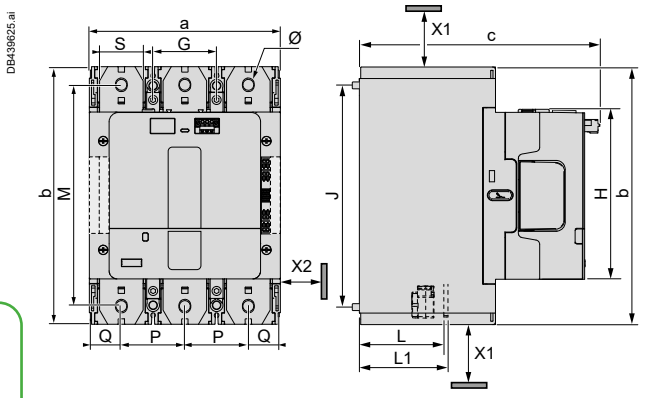

All dimensions are in mm.

a	b	c	G	J	M	H	L	L1	P	Q	S	Ø
210.6	284	265.6	70	242	244	187.4	107	113	70	35.3	48	13

4-pole

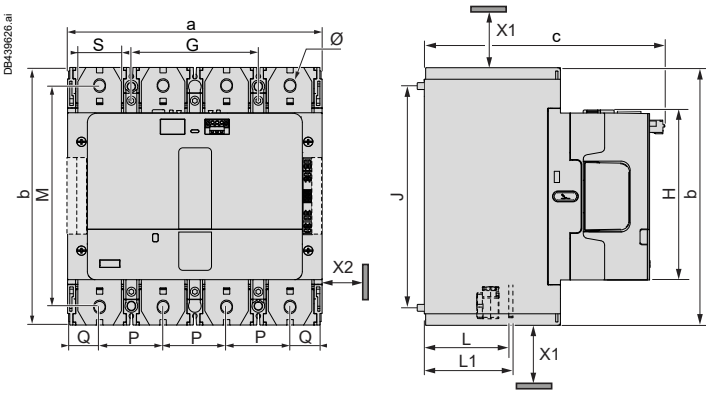

All dimensions are in mm.

a	b	c	G	J	M	H	L	L1	P	Q	S	Ø
280.6	284	265.6	140	242	244	187.4	107	113	70	35.3	48	13

X1 (mm) = Minimum electrical clearance.
LC1G115…800, up to 1000 V: 40 mm.
X2 (mm) = Minimum electrical clearance according to operating voltage inside metallic cabinets / adjacent installation of contactors.
LC1G115…800: 5 mm.

References:
pages B9/10 to B9/21
Characteristics:
pages B9/25 to B9/29
Diagrams:
page B9/34

Dimensions/mounting

Dimensions

LA9GRFB1

For replacement of F115-225

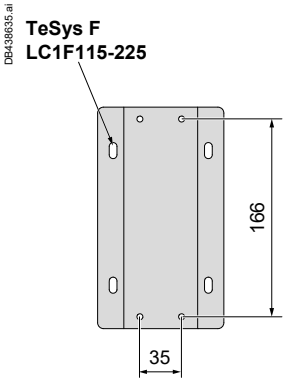

LA9GRFB2

For replacement of F265-500

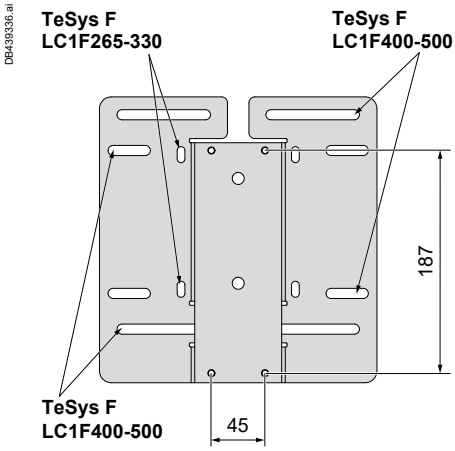

LA9GRFB3

For replacement of F630 and F800

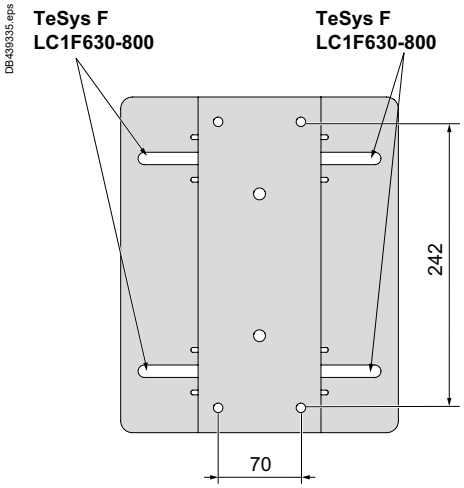

Note: *All dimensions are in mm.*

References:
page B9/19

Diagrams

TeSys Giga High power contactors

Advanced version - ON/OFF control by PLC

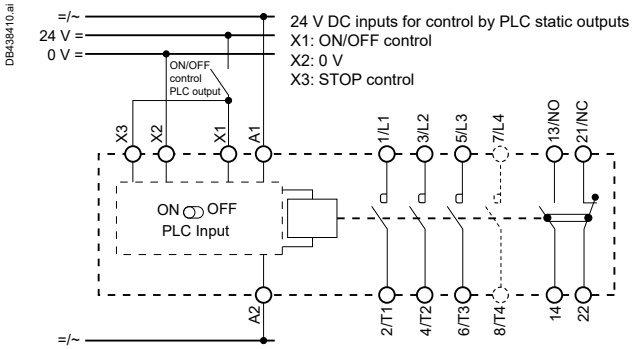

Advanced version - ON/OFF control by PLC in safety application

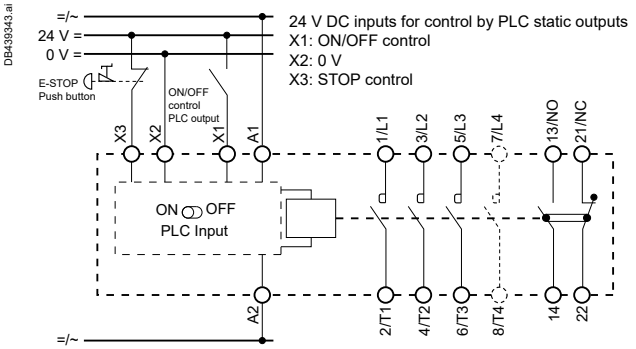

Advanced version - Control by switch

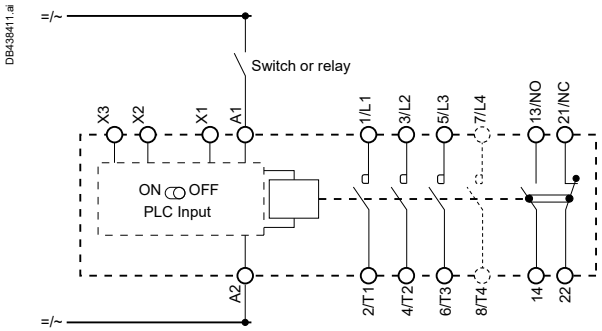

Standard version

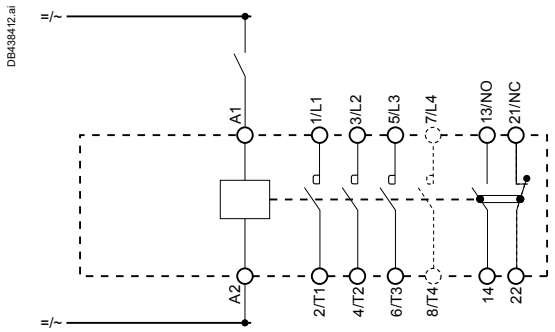

Add-on blocks

Instantaneous auxiliary contacts

1 N/O + 1 N/C	2 N/O	1 N/O + 1 N/C	2 N/O
LAG8N113P	**LAG8N203P**	**LAG8N113**	**LAG8N203**
mirror contacts		**mirror contacts**	

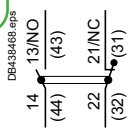

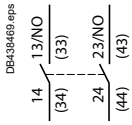

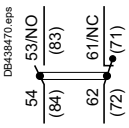

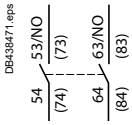

(1) Terminal numbers in brackets refer to blocks when mounted upside down, on left-hand side of contactor.

Ref.
High power contactors

TeSys Control
F High power contactors

TeSys F, FG, CR1F, V Contactors

Type of product	Range		Pages
TeSys F Contactors for AC-3 applications	780 and 1000 A		B10/2
TeSys F Contactors for AC-1 applications	From 1200 A to 2600 A		B10/3
TeSys FG Shockproof contactors (to be discontinued)	From 150 to 630 A - AC-3		B10/4
TeSys CR1F Magnetic latching contactors	From 150 to 630 A - AC-3		B10/5
TeSys F Auxiliary contact blocks, accessories, spare parts, delayed opening devices			B10/6
TeSys F Coils			B10/11
Accessories, coils for shockproof and magnetic latching contactors TeSys FG (to be discontinued), TeSys CR1F			B10/15

Technical Data for Designers B10/23

Product references

PB112306.eps

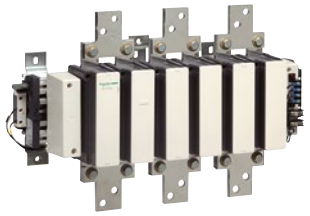

LC1F780

PB123973.png

LC1F1000

3-pole contactors - Motors 780 to 1000 A / 440 V
Category AC-3 - a.c. or d.c. coils

Standard power ratings of 3-phase motors 50-60 Hz in category AC-3							Rated operational current in AC-3	Basic reference, to be completed by adding the voltage code (1)	Weight
								Screw fixing, cabling	
220 V 230 V	380 V 400 V	415 V	440 V	500 V	660 V 690 V	1000 V	440 V up to		
kW	kW	kW	kW	kW	kW	kW	A		kg
220	400	425	425	450	475	450	780	**LC1F780●●**	39.500
315	560	630	670	–	–	–	1000	**LC1F1000●●**	31.000

Note: *auxiliary contact blocks, modules and accessories: see pages B10/6 to B10/15.*

(1) Please check the availability of your variant in the index page B10/21. The SEARCH function of your viewer can be used.

Volts ∼	24	48	110	115	120	208	220	230	240	380	400	415	440
LC1F780													
40…400 Hz (coil LX1)	–	–	F7	FE7	F7	L7	M7	P7	U7	Q7	V7	N7	R7
LC1F1000													
40...400 Hz (coil LX1F)	–	–	F7	–	G7	–	M7	P7	U7	Q7	V7	N7	R7

Volts ⎓	24	48	110	125	220	230	250	400	440
LC1F780, LC1F1000									
(coil LX4F)	–	–	FD	GD	MD	–	UD	–	RD

Characteristics:
pages B10/24 to B10/29

Dimensions:
pages B10/30 to B10/33

Schemes:
pages B10/34 and B10/35

Life Is On Schneider Electric

Product references

PB124008.eps

LC1F1250

PB124009.eps

LC1F1700...2100

PB124010.eps

LC1F2600

3 or 4-pole contactors - Loads 1200 to 2600 A / 440 V
Category AC-1 - a.c. or d.c. coils

Maximum current in AC-1 (θ ≤ 40 °C)	Number of poles	Basic reference, to be completed by adding the voltage code [1] Screw fixing, cabling	Weight
A			kg
1200	3	**LC1SF1200KUE**	13.400
1260	3	**LC1F1250●●**	19.000
1400	3	**LC1F1400●●**	29.000
1600	3	**LC1F780●●**	39.500
	4	**LC1F7804●●**	48.000
1700	3	**LC1F1700●●**	30.000
2100 [2]	3	**LC1F2100●●**	31.000
2600 [3]	3	**LC1F2600●●**	36.000

Note: auxiliary contact blocks, modules and accessories: see pages B10/6 to B10/15.
(1) Please check the availability of your variant in the index page B10/21. The SEARCH function of your viewer can be used.
*(2) With set of right-angled connectors **LA9F2100** (see page B10/9).*
*(3) With set of right-angled connectors **LA9F2600** (see page B10/9).*

Volts ∼	24	48	110	115	120	208	220	230	240	380	400	415	440
LC1F1250 40…400 Hz (coil LX1)	_	E7	F7	FE7	G7	L7	M7	P7	U7	Q7	V7	N7	R7
LC1F1400, F1700, F2100,F2600 40…400 Hz (coil LX1F)	_	_	F7	_	G7	_	M7	P7	U7	Q7	V7	N7	R7
Volts ⎓	**24**	**48**	**110**	**125**	**220**	**230**	**250**	**400**	**440**				
LC1F1250 (coil LX4F)	_	ED	FD	GD	MD	_	UD	_	RD				
LC1F1400, F1700, F2100, F2600 (coil LX4F)	_	_	FD	GD	MD	_	UD	_	RD				
Volts ∼/⎓	**100…250**												
LC1SF1200, LC1F1250, F2600 (coil LXE + ECM LA4EM)	KUE												

Characteristics: pages B10/24 to B10/29
Dimensions: pages B10/30 to B10/33
Schemes: pages B10/34 and B10/35

Product references

PB123832.eps

LC1FG150

PB123833.eps

LC1FG185

PB123834.eps

LC1FG265

Important notice: LC1FG range is planned for discontinuation without replacement.
Before ordering, please consult your regional sales office for availability.

3-pole shockproof contactors - Motors 150 to 630 A / 440 V AC-3, loads 250 to 1000 A / 440 V / AC-1 - a.c. coil

Standard power ratings of 3-phase motors 50-60 Hz in category AC-3							Rated operational current in cat. AC-3, 440 V/AC-1 up to	Basic reference, to be completed by adding the voltage code [1] Screw fixing, cabling [2]	Weight
220 V 230 V	380 V 400 V	415 V	440 V	500 V	660 V 690 V	1000 V			
kW	kW	kW	kW	kW	kW	kW	A		kg
40	75	80	80	90	100	65	150/250	**LC1FG150●●**	3.430
55	90	100	100	110	110	100	185/275	**LC1FG185●●**	4.650
75	132	140	140	160	160	147	265/350	**LC1FG265●●**	7.440
110	200	220	250	257	280	185	400/500	**LC1FG400●●**	9.100
147	250	280	295	355	335	335	500/700	**LC1FG500●●**	11.350
200	335	375	400	400	450	450	630/1000	**LC1FG630●●**	18.600

Note: these contactors have instantaneous auxiliary contact blocks with 2 N/O contacts, 1 N/C contact and one coil maintaining contact.

(1) Please check the availability of your variant in the index page B10/21. The SEARCH function of your viewer can be used.

(2) Power terminals can, if required, be protected against direct finger contact by the addition of shrouds, to be ordered separately.

Characteristics:
pages B10/36 to B10/44

Dimensions, schemes:
pages B10/45 and B10/46

Life Is On Schneider Electric

Product references

CR1F185_Image.eps

CR1F185

PB108370.eps

CR1F500

3-pole - Motors 150 to 630 A / 440 V / AC-3, loads 250 to 1000 A / 440 V AC-1 - a.c. or d.c. coils

Maximum thermal current in category AC-1 40 °C	Rated operational current in category AC-3 (440 V max)	Number of poles	Instantaneous auxiliary contacts		Basic reference, to be completed by adding the voltage code (1)	Weight
A	A					kg
250	150	3	–	–	**CR1F150●●**	3.500
275	185	3	–	–	**CR1F185●●**	4.600
350	265	3	–	–	**CR1F265●●**	7.400
500	400	3	–	–	**CR1F400●●**	9.100
700	500	3	–	–	**CR1F500●●**	11.300
1000	630	3	–	–	**CR1F630●●**	18.600

Note: *accessories, replacement parts and spare coils, see pages B10/19 to B10/21.*

(1) Standard control circuit voltages: see page B10/20. ***Please check the availability of your variant in the index page B10/21. The SEARCH function of your viewer can be used.***

Characteristics:
pages B10/47 to B10/57

Dimensions:
pages B10/58 to B10/61

DB439378.eps

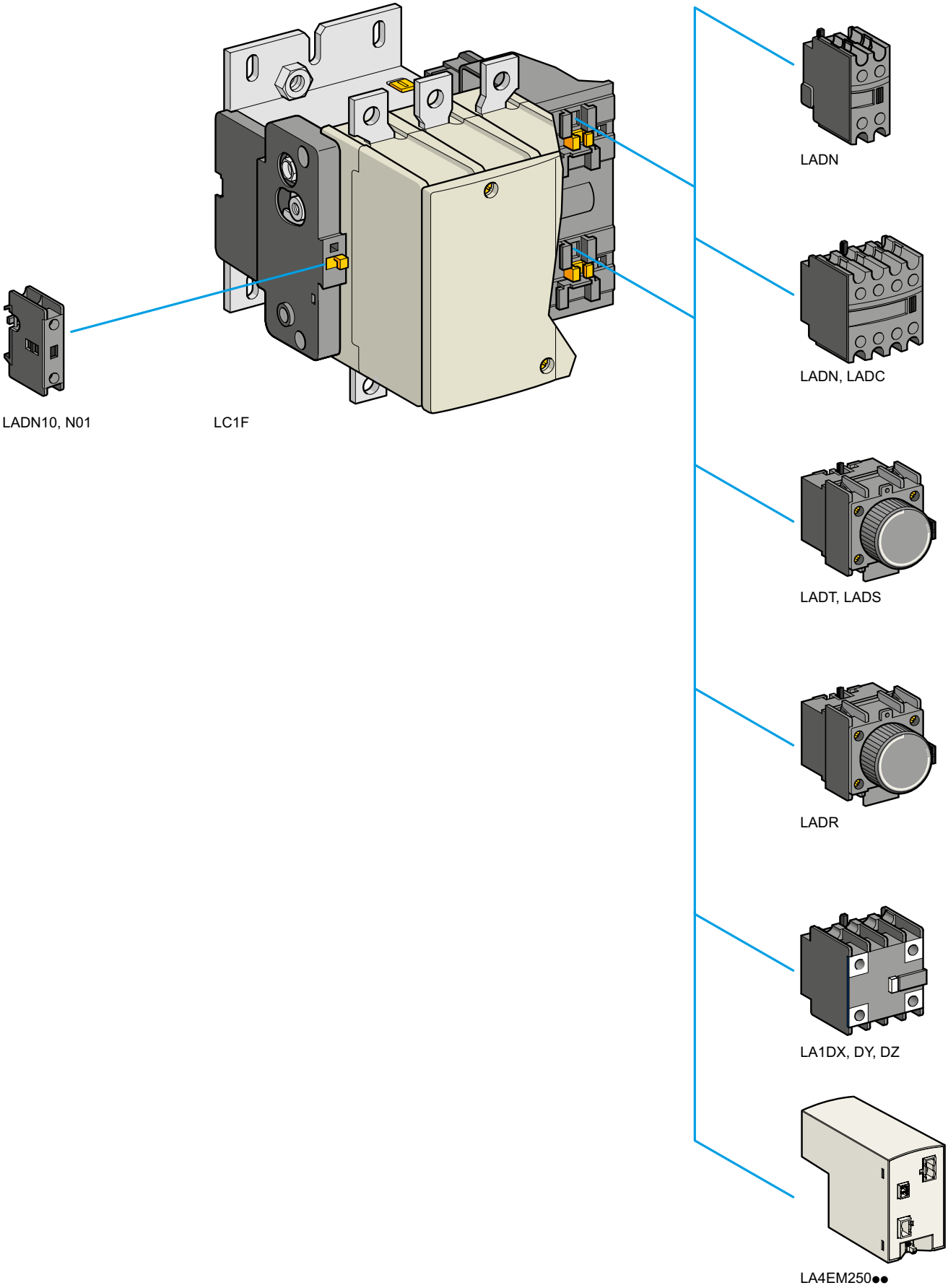

Life Is On Schneider Electric

Instantaneous auxiliary contact blocks

For use in normal operating environments

Number of contacts	Maximum number of blocks per contactor Clip-on mounting	Composition				Reference
1	1	–	–	1	–	**LADN10**
		–	–	–	1	**LADN01**
2	2	–	–	1	1	**LADN11**
		–	–	2	–	**LADN20**
		–	–	–	2	**LADN02**
4	2	–	–	2	2	**LADN22**
		–	–	1	3	**LADN13**
		–	–	4	–	**LADN40**
		–	–	–	4	**LADN04**
		–	–	3	1	**LADN31**
		–	–	2	2 (1)	**LADC22**

With terminal referencing conforming to EN 50012

2	2	–	–	1	1	**LADN11P**
		–	–	1	1	**LADN11G**
4	2	–	–	2	2	**LADN22P**
		–	–	2	2	**LADN22G**

Instantaneous auxiliary contact blocks for connection by lugs

This type of connection is not possible for blocks with 1 contact or blocks with dust and damp protected contacts. For all other instantaneous auxiliary contact blocks, add the figure **6** to the end of the references selected above. Example: **LADN11** becomes **LADN116**.

Instantaneous auxiliary contact blocks with dust and damp protected contacts

Recommended for use in particularly harsh industrial environments

Number of contacts	Maximum number of blocks per contactor Clip-on mounting	Composition				Reference
2	2	2	–	–	–	**LA1DX20**
		2	2 (2)	–	–	**LA1DY20**
4	2	2	–	2	–	**LA1DZ40**
		2	–	1	1	**LA1DZ31**

Time delay auxiliary contact blocks

Number of contacts	Maximum number of blocks per contactor Clip-on mounting	Time delay Type	Range	Reference
			s	
1 N/O + 1 N/C	2	On-delay	0.3...3 (3)	**LADT0**
			1…30	**LADT2**
			10…180	**LADT4**
			1…30 (4)	**LADS2**
		Off-delay	0.3...3 (3)	**LADR0**
			1…30	**LADR2**
			10…180	**LADR4**

(1) Including 1 N/O + 1 N/C make before break.
(2) Device fitted with 4 earth screen continuity terminals.
(3) With extended scale from 0.1 to 6 s.
(4) With switching time of 40 ms ±15 ms between opening of the N/C contact and closing of the N/O contact.

High power contactors

Introduction:
page B10/6

Schemes:
page B10/35

PB111612.eps

LA9D09981

PB123967.tif

LA4F●●●

Suppressor blocks [1]

RC circuits (resistor-capacitor)

- Effective protection for circuits highly sensitive to "high frequency" interference. For use only in cases where the voltage is virtually sinusoidal, i.e. less than 5 % total harmonic distortion.
- Voltage limited to 3 Uc max. and oscillating frequency limited to 400 Hz max.
- Slight increase in drop-out time (1.1 to 1.3 times the normal time).

Mounting	Uc		Reference
Clip-on mounting on all ratings and all a.c. coils.	∿	24…48 V	**LA4FRCE**
		50…110 V	**LA4FRCF**
		127…240 V	**LA4FRCP**
		265…415 V	**LA4FRCV**
Suppressor block bracket			**LA9D09981**

Varistors (peak limiting)

- Protection provided by limiting the transient voltage to 2 Uc max.
- Maximum reduction of transient voltage peaks.

Clip-on mounting on all ratings and all coils.	∿ or ⎓	24…48 V	**LA4FVE**
		50…110 V	**LA4FVF**
		127…240 V	**LA4FVP**
		265…415 V	**LA4FVV**

Diodes

- No overvoltage or oscillating frequencies.
- Increase in drop-out time (3 to 4 times the normal time).
- Polarised component.

Clip-on mounting on all ratings and all d.c. coils.	⎓	24…48 V	**LA4FDE**
		55…110 V	**LA4FDF**
		280…440 V	**LA4FDV**

Bidirectional peak limiting diodes (transil)

- Protection provided by limiting the transient voltage to between 2 and 2.5 times Uc max.
- Maximum reduction of transient voltage peaks.

Clip-on mounting on all ratings and all coils.	∿ or ⎓	24…48 V	**LA4FTE**
		50…110 V	**LA4FTF**
		127…240 V	**LA4FTP**
		265…415 V	**LA4FTV**

*(1) Order 2 x **LA4F●●●** for **F780**, **F1000**, **F1400**, **F1700**, **F2100** & **F2600** contactors and connect one suppressor block across each coil.*

Dimensions:
page B10/32

Life Is On Schneider Electric

Product references

PB107578.eps

LA9F2100 (set of 6)

PB114813.eps

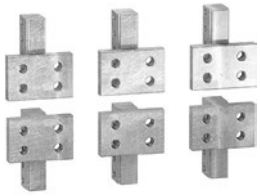

LA9F2600 (set of 6)

Right-angled connectors

For contactors or thermal overload relays

For use with	With connector plates		Set of 6 connectors	
Contactors	Width	Type	Set reference	Weight kg
LC1F1000, F1400, F1700, F2100	60 mm	Rear	**LA9F2100**	9.550
LC1F2600	100 mm	Rear	**LA9F2600**	4.380

High power contactors

Dimensions:
page B10/32

PB121430.eps

LA9F801

Phase separators

For use on 3-pole contactors	No. of barriers per set	Set reference
LC1F1400, F1700 F2100 and F2600	4	**LA9F801**

PB123968.tif

LA4EM250FK

Electronic Control Module (ECM) (1)

For use on 3 and 4-pole contactors	With coil reference	ECM reference
LC1SF1200	**LXEFK250**	**LA4EM250FK**
LC1F1250	**LXEFL250**	**LA4EM250FL**
LC1F2600	**LXEFL2502**	**LA4EM250FL2**

(1) ECM enables wider coil operating voltage for the F range of contactors.

Note: Refer to page number B10/29 for detailed technical information.

Sets of contacts

Per pole: 2 fixed contacts, 1 moving contact , 2 deflectors, 1 back-plate, clamping screws and washers.

For contactor	Type	Replacement for	Reference	Weight kg
3-pole	LC1F780	1 pole	**LA5F780801** (1)	4.700
		3 poles	**LA5F780803**	13.200
4-pole	LC1F7804	1 pole	**LA5F780801** (1)	4.700
		4 poles	**LA5F780804**	17.300

(1) Comprising 2 identical items per pole.

Control Panel Technical Guide:
Description and product reference of all mounting kits and wiring accessories for D, K, F - Star Delta, reverser, low-high speed control motor starters and changeover applications.

> Ref. Document: CPTG011_EN

> Click on QR code to download

LXEFK250

Coils for a.c./ d.c. wide band control voltage

Operates on AC or DC voltage inputs.
Low sealed consumption.
High tolerance to inrush voltage drops.

Control circuit voltage Uc	Average resistance at 20 °C ±10 %		Voltage code	Reference
	Inrush	Sealed		
V	Ω	Ω		
For contactor LC1SF1200				
100...250	8	8	KUE	**LXEFK250**

Specifications
Average consumption at 20 °C; 50 Hz/ 60 Hz; cos ϕ = 0.5-0.6:
- inrush: 550 VA max
- sealed: 8 VA max.

Heat dissipation: 5.5 W max.
Operating time at Uc: closing = 40...80 ms, opening = 6…54 ms.
Operating cycles/hour (θ ⩽ 55 °C): 1200.
Embedded PLC input according IEC 61131-2 type 2:
- Off state: 0...5 V DC
- On state: 11...30 V DC.

Control circuit voltage Uc	Average resistance at 20 °C ±10 %		Voltage code	Reference
	Inrush	Sealed		
V	Ω	Ω		
For contactor LC1F1250				
100...250	4.78	4.78	KUE	**LXEFL250**

Specifications
Average consumption at 20 °C; 50 Hz/ 60 Hz; cos ϕ = 0.5-0.6:
- inrush: 680 VA max
- sealed: 10 VA max.

Heat dissipation: 5.5 W max.
Operating time at Uc: closing = 40...80 ms, opening = 6...54 ms.
Operating cycles/hour (θ ⩽ 55 °C): 1200.
Embedded PLC input according IEC 61131-2 type 2:
- Off state: 0...5 V DC
- On state: 11...30 V DC.

Control circuit voltage Uc	Average resistance at 20 °C ±10 %		Voltage code	Reference
	Inrush	Sealed		
V	Ω	Ω		
For contactor LC1F2600				
100...250	2.27	2.27	KUE	**LXEFL2502**

Specifications
Average consumption at 20 °C; 50 Hz/ 60 Hz; cos ϕ = 0.5-0.6:
- inrush: 2400 VA max
- sealed: 24.5 VA max.

Heat dissipation: 5.5 W max.
Operating time at Uc: closing = 54...88 ms, opening = 20...28 ms.
Operating cycles/hour (θ ⩽ 55 °C): 600.
Embedded PLC input according IEC 61131-2 type 2:
- Off state: 0...5 V DC
- On state: 11...30 V DC.

Coils for a.c., 40...400 Hz control voltage

Low sealed consumption.
Operate on networks with harmonic numbers ⩽ 7.

Control circuit voltage Uc	Average resistance at 20 °C ±10 %		Inductance of closed circuit	Voltage code	Reference	Weight
	Inrush	Sealed				
V	Ω	Ω	H			kg
For contactor LC1SF1200						
220	35.5	915	4.55	M7	**LX1FK220**	1.150
230	35.5	915	4.55	P7	**LX1FK220**	1.150

PB121423.eps

LX1FK●●●

Specifications
Average consumption at 20 °C for 50 or 60 Hz, cos φ = 0.9:
■ inrush: 1050…1150 VA,
■ sealed: 16…20 VA.
Operating cycles/hour (θ ⩽ 55 °C): ⩽ 2400.
Heat dissipation: 18 W.
Operating time at Uc: closing = 40…75 ms, opening = 100…170 ms.

For contactor LC1F1250						
110/120	6.45	165	1.85	F7	**LX1FL110**	1.500
115	6.45	165	1.85	FE7	**LX1FL110**	1.500
200/208	20.5	605	2.65	L7	**LX1FL200**	1.500
220	25.5	730	3.35	M7	**LX1FL220**	1.500
230	25.5	730	3.35	P7	**LX1FL220**	1.500
240	25.5	730	3.35	U7	**LX1FL220**	1.500
265/277	31	900	4.1	W7	**LX1FL260**	1.500
380	78	2360	10.5	Q7	**LX1FL380**	1.500
400	78	2360	10.5	V7	**LX1FL380**	1.500
415	96	2960	13	N7	**LX1FL415**	1.500
440	96	2960	13	R7	**LX1FL415**	1.500

PB121424.eps

LX1FL●●●

Specifications
Average consumption at 20 °C for 50 or 60 Hz, cos φ = 0.9:
■ inrush: 1500…1730 VA,
■ sealed: 20…25 VA.
Operating cycles/hour (θ ⩽ 55 °C): 1200.
Heat dissipation: 20 W.
Operating time at Uc: closing = 40…80 ms, opening = 100…200 ms.

Coils for a.c., 40...400 Hz control voltage

Low sealed consumption.
Operate on networks with harmonic numbers ⩽ 7.

PB112321.eps

LX1FX●●●

Control circuit voltage Uc	Average resistance at 20 °C ±10 %		Inductance of closed circuit	Voltage code	Reference	Weight
	Inrush	Sealed				
V	Ω	Ω	H			kg
For contactor LC1F780						
110/120	4.95 (2)	230 (2)	0.21	F7	**LX1FX110** (1)	3.000
115	4.95 (2)	230 (2)	0.21	FE7	**LX1FX110** (1)	3.000
220	19.5 (2)	920 (2)	0.82	M7	**LX1FX220** (1)	3.000
230	19.5 (2)	920 (2)	0.82	P7	**LX1FX220** (1)	3.000
240	19.5 (2)	920 (2)	0.82	U7	**LX1FX220** (1)	3.000
265/277	29.8 (2)	1330 (2)	1.25	W7	**LX1FX280** (1)	3.000
415/480	74.3 (2)	3340 (2)	2.8	N7	**LX1FX415** (1)	3.000
440	74.3 (2)	3340 (2)	2.8	R7	**LX1FX415** (1)	3.000

Specifications
Average consumption at 20 °C for 50 or 60 Hz, cos φ = 0.9:
■ inrush: 1900…2300 VA, sealed: 44…55 VA.
Operating cycles/hour (θ ⩽ 55 °C): 600.
Heat dissipation: 2 x 22 W.
Operating time at Uc: closing = 40…80 ms, opening = 130…230 ms.

PB121422.eps

LX1FK●●●

Control circuit voltage Uc	Average resistance at 20 °C ±10 %		Inductance of closed circuit	Voltage code	Reference	Weight
	Inrush	Sealed				
V	Ω	Ω	H			kg
For contactor LC1F1000						
110	4.718	98.4	0.63	F7	**LX1FK055** (3)	1.150
For contactors LC1F1400, LC1F1700 and LC1F2100						
120	5.92	106	0.72	G7	**LX1FK070** (3)	1.150
For contactors LC1F1000, LC1F1400, LC1F1700 and LC1F2100						
220	9.55	260	1.25	M7	**LX1FK110** (3)	1.150
230	9.55	260	1.25	P7	**LX1FK110** (3)	1.150
277	16.5	420	2.25	W7	**LX1FK140** (3)	1.150
415	35.5	915	4.55	N7	**LX1FK220** (3)	1.150
440	35.5	915	4.55	R7	**LX1FK220** (3)	1.150
500	44.5	1160	5.75	S7	**LX1FK240** (3)	1.150

Specifications
Average consumption at 20 °C for 50 or 60 Hz, cos φ = 0.9:
■ inrush: 1600…2400 VA, sealed: 29…37 VA.
Operating cycles/hour (θ ⩽ 55 °C): 600.
Heat dissipation: 2 x 18 W.
Operating time at Uc: closing = 40…75 ms, opening = 100…170 ms.

PB121421.eps

LX1FL●●●

Control circuit voltage Uc	Average resistance at 20 °C ±10 %		Inductance of closed circuit	Voltage code	Reference	Weight
	Inrush	Sealed				
V	Ω	Ω	H			kg
For contactors LC1F2600						
110	2.05	41	0.18	F7	**LX1FL065** (3)	1.150
120	2.05	41	0.18	G7	**LX1FL065** (3)	1.150
220	6.45	165	0.76	M7	**LX1FL110** (3)	1.150
230	6.45	165	0.76	P7	**LX1FL110** (3)	1.150
277	10.2	317	1.45	W7	**LX1FL140** (3)	1.150
380	20.5	605	2.65	Q7	**LX1FL200** (3)	1.150
400	20.5	605	2.65	V7	**LX1FL200** (3)	1.150
415	25.5	730	3.35	N7	**LX1FL220** (3)	1.150
440	25.5	730	3.35	R7	**LX1FL220** (3)	1.150
500	30.8	901	4.13	S7	**LX1FL260** (3)	1.150

Specifications
Average consumption at 20 °C for 50 or 60 Hz, cos φ = 0.9:
■ inrush: 2200…2700 VA, sealed: 37.4…50.6 VA.
Operating cycles/hour (θ ⩽ 55 °C): 600.
Heat dissipation: 2 x 25 W.
Operating time at Uc: closing = 40…80 ms, opening = 100…200 ms.

(1) Reference of set of 2 identical coils, to be connected in series.
(2) Value for the 2 coils in series.
(3) Order 2 coils and connect them in series.

PB112328_40.eps

LX4FK●●●

LX4FK specifications
Average consumption:
- inrush: 990…1220 W,
- sealed: 4.54…8 W.

Operating cycles/hour (θ ≤ 55 °C): 2400.
Operating time at Uc: closing = 50…60 ms, opening = 45…60 ms.

LXE specifications
Average consumption:
- inrush 50/60 Hz: 280...730 VA rms
  DC: 270...680 W,
- sealed: 50/60 Hz: 4.5...10 VA rms
  DC: 2.5..5.5 W.

Heat Dissipation: 2.5..5.5 W
Operating cycles/hour (θ ≤ 55 °C): < 2400.
Operating time at Uc: closing = 40…80 ms, opening = 6…54 ms.
Embedded PLC input according IEC 61131-2 type 2:
- Off state: 0...5 V DC
- On state: 11...30 V DC.

LX4FL specifications
Average consumption:
- inrush: 1420…1920 W,
- sealed: 6.5…12.5 W.

Operating cycles/hour (θ ≤ 55 °C): 1200.
Operating time at Uc: closing = 60…70 ms, opening = 40…50 ms.

LX4FX specifications
Average consumption:
- inrush: 1960…2420 W
- sealed: 42…52 W.

Operating cycles/hour (θ ≤ 55 °C): 600.
Operating time at Uc: closing = 70…80 ms, opening = 100…130 ms.

LX4FK specifications with LC1F1000,1400,1700, 2100
Average consumption:
- inrush: 2000…2200 W,
- sealed: 8…10 W.

Operating cycles/hour (θ ≤ 55 °C): 600.
Operating time at Uc: closing = 50…60 ms, opening = 45…60 ms.

LX4FL specifications with LC1F2600
Average consumption:
- inrush: 2130…2880 W
- sealed: 13…25 W.

Operating cycles/hour (θ ≤ 55 °C): 600.
Operating time at Uc: closing = 60…70 ms, opening = 40…50 ms.

Coils for d.c. control voltage

Low sealed consumption.

Control circuit voltage Uc	Average resistance at 20 °C ±10 % Inrush	Sealed	Inductance of closed circuit	Voltage code	Reference	Weight
V	Ω	Ω	H			kg
For contactor LC1SF1200						
110	11.5	2450	280	FD	**LX4FK110**	1.080
220	44	8150	1080	MD	**LX4FK220**	1.080
For contactor LC1F1250 (1)						
For contactors LC1F115 and LC1F150						
100...380 ⎓						
For contactor LC1SF1200						
100...250 ∿ 110 and 220 ⎓	8	–	–	KUE	**LXEFK250**	1.100
For contactor LC1F1250						
100...250 ∿ 100...380 ⎓	4.78	–	–	KUE	**LXEFL250**	1.100
For contactor LC1F1250						
110	8.1	1680	180	FD	**LX4FL110**	1.450
220	31	5160	650	MD	**LX4FL220**	1.450
For contactor LC1F780						
110	6.1 (3)	280 (3)	0.26	FD	**LX4FX110** (2)	3.000
125	7.7 (3)	410 (3)	0.33	GD	**LX4FX125** (2)	3.000
250	29.8 (3)	1330 (3)	1.25	UD	**LX4FX250** (2)	3.000
440	92 (3)	4180 (3)	3.5	RD	**LX4FX440** (2)	3.000
For contactors LC1F1000, LC1F1400, LC1F1700 and LC1F2100						
125	3.73	916	122	GD	**LX4FK065** (4)	1.080
220	11.5	2450	280	MD	**LX4FK110** (4)	1.080
440	44	8150	1080	RD	**LX4FK220** (4)	1.080
For contactor LC1F2600						
110	2.05	481	64	FD	**LX4FL055** (4)	1.080
125	2.53	603	80	GD	**LX4FL065** (4)	1.080
220	11.5	2450	280	MD	**LX4FL110** (4)	1.080
250	15	2930	400	UD	**LX4FL125** (4)	1.080
440	44	8150	1080	RD	**LX4FL220** (4)	1.080

*(1) LXE coil to be used along with suitable Electronic Control Module (ECM) Ref. **LA4EM●●●●●**. For details, please refer to page B10/10.*
(2) Reference of set of 2 identical coils, to be connected in series.
(3) Value for the 2 coils in series.
(4) Order 2 coils and connect them in series.

Life Is On Schneider Electric

Auxiliary contact blocks for LC1FG 3-pole shockproof contactors

PB121689.eps

LADN●●

Instantaneous auxiliary contact blocks

For use in normal operating environments

Number of contacts	Max. number of blocks per contactor Clip-on mounting	Composition				Reference	
1	1	–	–	1	–	**LADN10**	(1)
		–	–	–	1	**LADN01**	(1)
4	1	–	–	2	2	**LADN22**	(1)
		–	–	4	–	**LADN40**	(1)
		–	–	–	4	**LADN04**	(1)
		–	–	3	1	**LADN31**	(1)

PB123803.eps

LADT●

Time delay auxiliary contact blocks

Number of contacts	Max. number of blocks per contactor Clip-on mounting	Time delay Type	Range	Reference	
			s		
1 N/O + 1 N/C	1	On-delay	0.3...3 (2)	**LADT0**	
			1…30	**LADT2**	(1)
			10…180	**LADT4**	
			1…30 (3)	**LADS2**	
		Off-delay	0.3...3 (2)	**LADR0**	
			1…30	**LADR2**	(1)
			10…180	**LADR4**	

(1) Device approved by the DCN (French naval shipyard department) and authorised for on-board use.
(2) With extended scale from 0.1 to 6 s.
(3) With switching time of 40 ms ±15 ms between opening of the N/C contact and closing of the N/O contact.

Characteristics:
pages B10/43 and B10/44

Schemes:
page B10/46

PB121695.eps

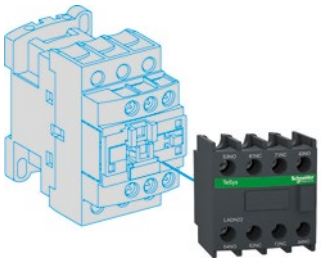

LADN●●

PB111617.eps

LA9F103

PB111592.eps

LA9F70●

Accessories for contactors CR1F

Description	Number of contacts or shrouds	For use on	Reference
Instantaneous auxiliary contacts	(1)	CR1F	**LADN●●, LADX●●, LADY●●, LADZ●●** (1)
Time delay auxiliary contacts	(1)	CR1F	**LADT●, LADS●, LADR●** (1)
Contact blocks with protected terminals for 3-pole contactors (for mounting on contactors with closed arc chamber)	Set of 2 blocks	CR1F150 and CR1F185	**LA9F103**
Power terminal protection shrouds	Set of 6 shrouds for 3-pole contactors	CR1F150 and CR1F185	**LA9F702**
		CR1F265 to CR1F500	**LA9F703**
		CR1F630	**LA9F704**

Description	Application	Reference
Mechanical interlock and power connections	For assembly of reversing contactors and changeover contactor pairs	See pages B10/17 and B10/18

(1) For maximum number per contactor and complete reference, see page B10/7.

Control Panel Technical Guide:
Description and product reference of all mounting kits and wiring accessories for D, K, F - Star Delta, reverser, low-high speed control motor starters and changeover applications.

> Ref. Document: CPTG011_EN

> Click on QR code to download

Dimensions:
pages B10/58 to B10/61

Life Is On Schneider Electric

Reversing and changeover assemblies with CR1F magnetic latching contactors

Horizontally mounted

Mechanical interlocks

Reversers assembled using 2 contactors of identical rating, type:
CR1F150
CR1F185
CR1F265
CR1F400
CR1F500
CR1F630

LA9F●970

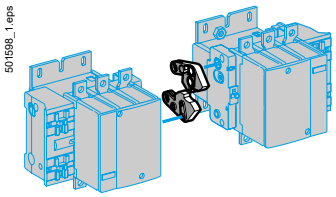

Sets of power connections

Reversing contactors
LA9F●976

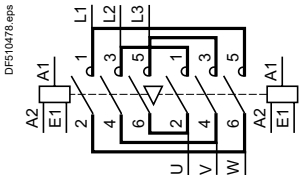

3-pole changeover contactor pairs
LA9F●982

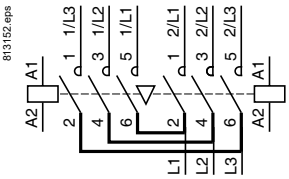

Vertically mounted

Mechanical interlocks

Reversers assembled using 2 contactors of identical rating, type:
CR1F150
CR1F185
CR1F265
CR1F400
CR1F500
CR1F630

LA9FF4F
LA9FG4G
Assembly A

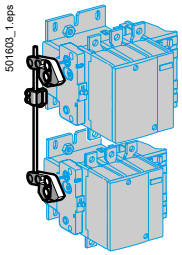

LA9FH4H
LA9FJ4J
LA9FL4L
Assembly C

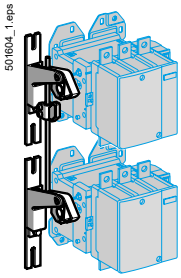

Reversers assembled using 2 contactors of different ratings, type:
CR1F150
CR1F185
CR1F265
CR1F400
CR1F500
CR1F630

LA9FH4F
LA9FJ4F
LA9FH4G
LA9FJ4G
LA9FL4G
Assembly B

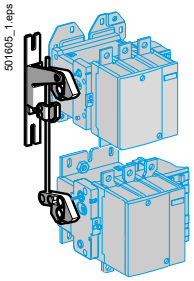

LA9FJ4H
LA9FK4H
LA9FL4H
LA9FK4J
LA9FL4J
Assembly C

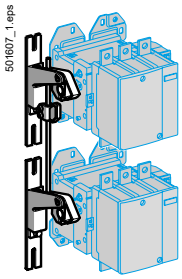

Reversers assembled using 3 contactors of identical or different ratings

LA9F●4●4●

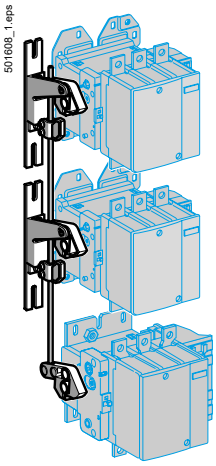

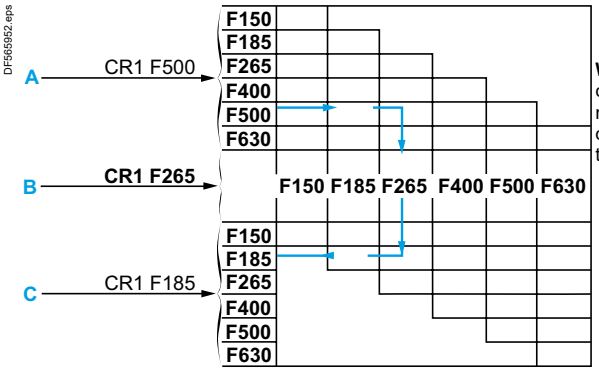

Warning: the contactor ratings must be in decreasing size from top to bottom.

Reversing and changeover assemblies with CR1F magnetic latching contactors.

Reversers assembled using 2 contactors of identical rating

Contactor type	Set of power connections		Mechanical interlock	
	3-pole Reference	Weight kg	Kit reference	Weight kg
For assembly of 3-pole reversing contactors for motor control (1)				
Horizontally mounted				
CR1F150	**LA9FF976**	0.600	**LA9FF970**	0.060
CR1F185	**LA9FG976**	0.780	**LA9FG970**	0.060
CR1F265	**LA9FH976**	1.500	**LA9FJ970**	0.140
CR1F400	**LA9FJ976**	2.100	**LA9FJ970**	0.140
CR1F500	**LA9FK976**	2.350	**LA9FJ970**	0.140
CR1F630	**LA9FL976**	3.800	**LA9FL970**	0.150
Vertically mounted				
CR1F150	(2)	–	**LA9FF4F**	0.345
CR1F185	(2)	–	**LA9FG4G**	0.350
CR1F265	(2)	–	**LA9FH4H**	1.060
CR1F400	(2)	–	**LA9FJ4J**	1.200
CR1F630	(2)	–	**LA9FL4L**	1.220

Reversers assembled using 2 contactors of different ratings

Contactor type		Mechanical interlock	
At bottom	At top	Kit reference	Weight kg
For assembly of 3-pole changeover contactor pairs			
Vertically mounted (2)			
CR1F150	CR1F265	**LA9FH4F**	0.870
	CR1F400	**LA9FJ4F**	0.930
CR1F185	CR1F265	**LA9FH4G**	0.860
	CR1F400	**LA9FJ4G**	0.940
	CR1F630	**LA9FL4G**	0.950
CR1F265	CR1F400	**LA9FJ4H**	1.130
	CR1F500	**LA9FK4H**	1.130
	CR1F630	**LA9FL4H**	1.140
CR1F400	CR1F500	**LA9FK4J**	1.200
	CR1F630	**LA9FL4J**	1.210

For assembly of 3-pole reversing contactors (3)	
Using 3 contactors (vertically mounted) of identical or different ratings	**Mechanical interlock**
	Kit reference (4)
The contactor ratings must be in decreasing size from top to bottom.	**LA9F●4●4●**

Contactors	CR1F150	CR1F185	CR1F265	CR1F400	CR1F500	CR1F630
Code	F	G	H	J	K	L

Example: mechanical interlock for reversing contactor made up of 3 different contactors: CR1F500 top, CR1F265 middle and CR1F185 bottom: **LA9FK4H4G**.

(1) A 3-pole reversing contactor for motor control can be converted into a 3-pole changeover contactor pair by removing the upper connecting links.
(2) All power connections are to be made by the customer.
(3) Closing of one of the 3 contactors prevents closing of the other 2 contactors.
(4) Complete the reference by replacing the first dot with the code for the upper contactor, the second dot with the code for the middle contactor and the third dot with the code for the bottom contactor.

Illustrations:
page B10/17

Dimensions:
pages B10/58 to B10/61

Life Is On Schneider Electric

Product references

PB121414.eps

LA5FG431

References

Description	For contactor		Reference	Weight kg
Complete sets of contacts for 3 (1)	3-pole	CR1F150	**LA5FF431**	0.270
		CR1F185	**LA5FG431**	0.350
		CR1F265	**LA5FH431**	0.660
		CR1F400	**LA5F400803**	0.660
		CR1F500	**LA5F500803**	0.660
		CR1F630	**LA5F630803**	0.660

(1) Set containing the following (per pole): 2 fixed contacts, 1 moving contact , 2 deflectors, 1 back-plate, clamping screws and washers.

PB121413.eps

LXF0FH007

PB121412.eps

LX0FK007

Standard coils for a.c. or d.c. control voltage

Usual voltages		Resistance of winding at θ = 20 °C		Reference	Voltage code	Weight
50…400 Hz or ⎓	50 Hz, 60 Hz	Latching	Unlatching			
V	V	Ω	Ω			kg
For contactors CR1F150						
48	–	1.98	230.8	**LX0FF005**	E7	0.440
127	–	11.61	1788	**LX0FF007**	G7	0.440
–	415	139.50	16 717	**LX0FF011**	N7	0.440
For contactors CR1F185						
48	–	1.42	220	**LX0FG005**	E7	0.560
208	–	21.30	3169	**LX0FG020**	L7	0.560
–	415	102.30	14 305	**LX0FG011**	N7	0.560
For contactors CR1F265						
48	–	1.34	183.4	**LX0FH005**	E7	0.780
127	–	8.56	1325	**LX0FH007**	G7	0.780
208	–	20.20	2654	**LX0FH020**	L7	0.780
–	380/400	78.39	11 803	**LX0FH010**	Q7	0.780
–	415	102.9	15 006	**LX0FH011**	N7	0.780
For contactors CR1F400						
208	–	24.40	2643	**LX0FJ020**	L7	1.120
–	380/400	94.80	9380	**LX0FJ010**	Q7	1.120
–	415	121.10	11 763	**LX0FJ011**	N7	1.120
For contactors CR1F500						
48	–	1.57	166	**LX0FK005**	E7	1.220
127	–	9.56	1159	**LX0FK007**	G7	1.220
208	–	23.60	2981	**LX0FK020**	L7	1.220
–	415	112.06	13 256	**LX0FK011**	N7	1.220
For contactors CR1F630						
48	–	0.87	204	**LX0FL005**	E7	1.460
127	–	6.45	1830	**LX0FL007**	G7	1.460
208	–	20.20	2961	**LX0FL020**	L7	1.460
–	415	77.97	13 003	**LX0FL011**	N7	1.460

Product references

CR1F150F7	LA4FRCE	LA9F705	LA9FK982	LC1F780F7
CR1F150M7	LA4FRCF	LA9F706	LA9FL4G	LC1F780FE7
CR1F150U7	LA4FRCP	LA9F707	LA9FL4H	LC1F780G7
CR1F185F7	LA4FRCV	LA9F708	LA9FL4J	LC1F780M7
CR1F185G7	LA4FTE	LA9F709	LA9FL4L	LC1F780P7
CR1F185M7	LA4FTF	LA9F801	LA9FL970	LC1F780Q7
CR1F185Q7	LA4FTP	LA9F980	LA9FL976	LC1FG265R7
CR1F185U7	LA4FVE	LA9FF4F	LA9FL980	LC1FG500N7
CR1F265F7	LA4FVF	LA9FF601	LA9FX990M	LC1SF1200KUE
CR1F265G7	LA4FVP	LA9FF970	LA9FX991F	LC1SF1200M7
CR1F265GD31S003	LA4FVV	LA9FF976	LA9FX991Q	LC1SF1200P7
CR1F265M7	LA5D11550	LA9FF981	LC1D115004L6	LX1D8FE7
CR1F265U7	LA5F400802	LA9FG4F4F	LC1F1250	LX1D8L7
CR1F400F7	LA5F400803	LA9FG4G	LC1F1250F7	LX1D8N7
CR1F400FZ7	LA5F400804	LA9FG601	LC1F1250KUE	LX1D8R7
CR1F400M7	LA5F500803	LA9FG610	LC1F1250M7	LX1D8V7
CR1F400Q7	LA5F500804	LA9FG970	LC1F1250MD	LX1FK220
CR1F500F7	LA5F630803	LA9FG976	LC1F1250P7	LX1FL110
CR1F500GD31S003	LA5F630804	LA9FG979	LC1F1250Y	LX1FL200
CR1F500M7	LA5F780801	LA9FG980	LC1F1400	LX1FL220
CR1F630F7	LA5F780803	LA9FH4F	LC1F1400MD	LX1FL2206
CR1F630M7	LA5F780804	LA9FH4G	LC1F1400P7	LX1FL260
CR1F630MZ7	LA5F800803	LA9FH4H	LC1F1700	LX1FL380
DR5TE4S	LA5FF431	LA9FH4H4F	LC1F1700F7	LX1FL415
DR5TE4U	LA5FF441	LA9FH4H4H	LC1F1700M7	LX1FX110
DR5TF4V	LA5FG431	LA9FH601	LC1F1700MD	LX1FX220
DZ2FF1	LA5FG441	LA9FH602	LC1F1700P7	LX1FX415
DZ2FF6	LA5FH431	LA9FH610	LC1F2100	LX4D8MD
DZ2FG1	LA5FH441	LA9FH976	LC1F2100F7	LX4FK110
DZ2FG6	LA5FJ431	LA9FH982	LC1F2100LD	LX4FK220
DZ2FJ1	LA5FK431	LA9FJ4G	LC1F2100LDBR	LX4FL110
DZ2FJ6	LA5FL431	LA9FJ4H	LC1F2100M7	LX4FL125
DZ2FK1	LA9D11517	LA9FJ4J	LC1F2100MD	LX4FL220
DZ2FK6	LA9D115604	LA9FJ4J4J	LC1F2100P7	LX4FX110
DZ2FL1	LA9D115692	LA9FJ610	LC1F2100V7	LXEFF250
DZ2FL2	LA9D11570	LA9FJ970	LC1F2600	LXEFG250
DZ2FL3	LA9D115704	LA9FJ974	LC1F2600KUE	LXEFH250
DZ2FL6	LA9D730	LA9FJ976	LC1F2600MD	LXEFJ250
DZ2FR1	LA9F103	LA9FJ980	LC1F2600P7	LXEFK250
DZ2FX1	LA9F2100	LA9FJ982	LC1F780	LXEFL250
DZ2FX6	LA9F2600	LA9FK4H	LC1F7804	LXEFL2502
LA4EM250FK	LA9F701	LA9FK4J	LC1F7804F7	
LA4EM250FL2	LA9F702	LA9FK4K	LC1F7804M7	
LA4FDE	LA9F703	LA9FK4K4K	LC1F7804MD	
LA4FDF	LA9F704	LA9FK976	LC1F7804P7	

This document is current. Click on the product reference to get the most recent availability status (hyperlink to **se.com** product datasheet).
If your product variant is no longer available, please consult your distributor or regional sales office.

Technical Data for Designers

Contents

F contactors:
> characteristics ..... B10/24 to B10/29
> dimensions ..... B10/30 to B10/33
> schemes ..... B10/34 and B10/35

FG shockproof contactors:
> characteristics ..... B10/36 to B10/44
> dimensions and schemes ..... B10/45 and B10/46

CR1F magnetic latching contactors:
> characteristics ..... B10/47 to B10/57
> dimensions ..... B10/58 to B10/61

Environment

Contactor type			LC1F780
Rated insulation voltage (Ui)	Conforming to IEC 60947-4-1. Overvoltage category III, degree of pollution: 3	**V**	1000
Rated impulse withstand voltage (Uimp)	Coil not connected to the power circuit	**kV**	8
Conforming to standards			IEC 60947-4-1, GB/T14048.4, UL 60947-4-1, CAN/CSA-C22.2 No. 60947-4-1, IACS E10, JIS C 8201-4-1
Product certifications			CB scheme, UL, CSA, CQC, EAC, ABS, BV , DNV , LRoS, RINA, CE marking, UKCA marking, CCC mark
Degree of protection	Conforming to IEC 60529		IP 20 front face with shrouds LA9F
Climatic withstand			According to IACS E10
Ambient air temperature around the device	Storage	**°C**	-60…+80
	Operation	**°C**	-5…+55
	Permissible at Uc	**°C**	-40…+70
Maximum operating altitude	Without derating	**m**	3000
Operating positions	Without derating		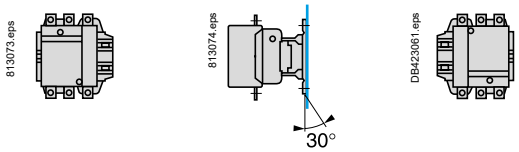 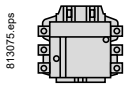 (not to be used for LC1F780, F1000, F1400, F1700, F2100 and F2600)
	With derating		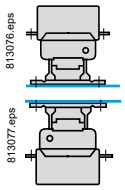 Apply the following derating coefficients: 0.75 on the pull-in voltage, 0.9 on the drop-out voltage and 0.8 on the operational current in AC-1. Apply the following derating coefficients: 1.15 on the pull-in voltage, 1.1 on the drop-out voltage and 0.8 on the operational current in AC-1. In either case: neither the making and breaking capacities nor the electrical and mechanical durabilities can be assured.
	Not to be used		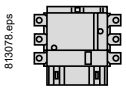
Shock resistance [1] 1/2 sine wave = 11 ms Conforming to IEC/EN 60068-2-27	Contactor open		5 gn
	Contactor closed [2]		15 gn
Vibration resistance [1] 5…300 Hz Conforming to IEC/EN 60068-2-6	Contactor open		2.5 gn
	Contactor closed		5.5 gn

(1) In the least favourable direction, without change of contact state (coil at Uc). Where higher resistance to mechanical shock is required, select shock-proof contactors. Please consult your Regional Sales Office.
(2) 12 gn for F780-F1250 contactors when used with Electronic control module (LA4EM) & LXE coils.

Ref.
High power contactors

Characteristics

LC1F1000	LC1SF1200	LC1F1250	LC1F1400	LC1F1700	LC1F2100	LC1F2600
1000	1000	1000	1000	1000	1000	1000
8	8	8	8	8	8	8
IEC 60947-4-1, GB/T14048.4, UL 60947-4-1, CAN/CSA-C22.2 No. 60947-4-1, JIS C 8201-4-1	IEC 60947-4-1, GB/T14048.4	IEC 60947-4-1, GB/T14048.4, UL 60947-4-1, CAN/CSA-C22.2 No. 60947-4-1, JIS C 8201-4-1				
CB scheme, UL, CSA, CQC, CE marking, UKCA marking, CCC mark	CB scheme, CQC, CE marking, UKCA marking, CCC mark	CB scheme, UL, CSA, CQC, CE marking, UKCA marking, CCC mark				
–	–	–				
-60…+80						
-5…+40	-5…+60	-5…+40				
-40…+60	-40…+70	-40…+60				
3000						
813073.eps 813074.eps 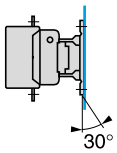 DB423061.eps 813075.eps (not to be used for LC1F780, F1000, F1400, F1700, F2100 and F2600)						
Not to be used	Possible positions with derating (see corresponding paragraph on left, same line)	Not to be used				
813078.eps						
6 gn	6 gn	6 gn	6 gn	6 gn	6 gn	6 gn
15 gn	15 gn	15 gn	15 gn	15 gn	15 gn	15 gn
2 gn	2 gn	2 gn	2 gn	2 gn	2 gn	2 gn
4 gn	4 gn (3)	4 gn	4 gn	4 gn	4 gn	4 gn

(3) Vibration resistance 5...30 Hz, when used with Electronic Control Module (ECM).

Characteristics

Pole characteristics

Contactor type				LC1F780	LC1F1000	LC1SF1200	LC1F1250	LC1F1400	LC1F1700	LC1F2100	LC1F2600
Number of poles				3 or 4	3	3	3	3	3	3	3
Rated operational current (Ie)	Ue ≤ 440 V	In AC-3, θ ≤ 55 °C	A	780	1000	-	-	-	-	-	-
	Ue ≤ 1000 V	In AC-1, θ ≤ 40 °C	A	1600	1250	1200	1260	1400	1700	2100 (2)	2600 (4)
Rated operational voltage (Ue)		Up to	V	1000	440	690	690	1000	1000	1000 (5)	1000
Frequency limits		Of the operational current (1)	Hz	$16^{2/3}$…200	$16^{2/3}$…200	$16^{2/3}$…200	$16^{2/3}$…200	$16^{2/3}$…200	$16^{2/3}$…200	$16^{2/3}$…200	$16^{2/3}$…200
Conventional thermal current		θ ≤ 40 °C	A	1600	1250	1200	1260	1400	1700	2100 (2)	2600 (4)
Rated making capacity		I rms conforming to IEC 60947-4-1	A	Making current: 10 x I in AC-3 or 12 x I in AC-4	10 x I in AC-3	Making current: 1.5 x I in AC-1					
Rated breaking capacity		I rms conforming to IEC 60947-4-1	A	Making and breaking current: 8 x I in AC-3 or 10 x I in AC-4	8 x I in AC-3	Making and breaking current: 1.5 x I in AC-1					
Maximum permissible current No current flowing for previous 60 minutes, at θ ≤ 40 °C		For 10 s	A	6250	10000	8000	8000	8000	10000	10000	12000
		For 30 s	A	5600	7500	5200	5200	6000	7500	7500	9000
		For 1 min	A	4600	5500	4000	4000	4500	5500	5500	7000
		For 3 min	A	3000	4200	3000	3000	4000	4200	4200	6000
		For 10 min	A	2200	3000	2000	2000	2600	3000	3000	4000
Short-circuit protection by fuses U ≤ 440 V		Motor circuit (type aM)	A	800	1000	–	–	–	–	–	–
		With thermal overload relay (type gG)	A	1000	1000	–	–	–	–	–	–
		gG fuses	A	2 x 800 (3)	1000	1400	1400	2 x 800 (3)	2 x 800 (3)	2 x 1000 (3)	2 x 1250 (3)
Average impedance per pole		At Ith and 50 Hz	mΩ	0.10	0.12	0.10	0.12	0.10	0.10	0.10	0.10
Power dissipation per pole for the above operational currents		AC-3	W	60	100	–	–	–	–	–	–
		AC-1	W	250	120	120	120	150	200	200	250
Connection											
	Bar	Number of bars		2	3	2	2	2	3	4	3
		Bar	mm	100 x 5	100 x 5	50x8	100 x 5	100 x 5	100 x 5	100 x 5	100 x 10
	Cable with lug		mm²	–	–	–	–	–	–	–	–
	Cable with connector		mm²	–	–	–	–	–	–	–	–
	Bolt diameter		mm	2 x Ø12	4 x Ø12 (Ø11.5 with set of right-angled connectors LA9F2100)	3 x Ø12	3 x Ø12	4 x Ø12 (Ø11.5 with set of right-angled connectors LA9F2100)			4 x Ø12 (Ø11.5 with set of right-angled connectors LA9F2600)
Tightening torque		Power circuit connections	N.m	58	58 (35 with set of right-angled connectors LA9F2100)	58	58	58 (35 with set of right-angled connectors LA9F2100)			58 (35 with set of right-angled connectors LA9F2600)

(1) Sine wave without interference. Above these values, contactors can be used only for AC-1 application.
*(2) With set of right-angled connectors **LA9F2100** (see page B10/9).*
(3) Paralleling of poles must be carried out only in accordance with the fuse manufacturer's recommendations.
*(4) θ ≤ 60 °C with set of right-angled connectors **LA9F2600** (see page B10/9).*
*(5) Ue =1000 V, with set of right angled connectors **LA9F2100** (see page B10/9).*

Ref.
High power contactors

Characteristics

a.c. control circuit characteristics with LX1 coil

Contactor type				LC1 F780 (1)	LC1 F1000 (1)	LC1 SF1200	LC1 F1250	LC1 F1400 (1)	LC1 F1700	LC1 F2100 (1)	LC1 F2600 (1)
Rated control circuit voltage (Uc)			V	110…500	110...500	220...230	110...600	110...500	110…500	110…500	110…500
Control voltage limits (θ ≤ 55 °C)	40…400 Hz coils	Operation		0.85…1.1 Uc	0.85…1.1 Uc	0.85...1.1 Uc	0.85…1.1 Uc	0.85…1.1 Uc	0.85…1.1 Uc	0.85…1.1 Uc	0.85…1.1 Uc
		Drop-out		0.2…0.4 Uc	0.3…0.5 Uc	0.25...0.5 Uc	0.25...0.5 Uc	0.3…0.5 Uc	0.3…0.5 Uc	0.3…0.5 Uc	0.3…0.5 Uc
Average consumption at 20 °C and at Uc	Inrush	40…400 Hz coil	VA	1900... 2300	1600... 2400	1050... 1150	1500... 1730	1600... 2400	1600... 2400	1600... 2400	2200... 2700
		Cos φ		0.9	0.9	0.9	0.9	0.9	0.9	0.9	0.9
	Sealed	40…400 Hz coil	VA	44...55	29...37	16...20	20...25	29...37	29...37	29...37	37.4...50.6
		Cos φ		0.9	0.9	0.9	0.9	0.9	0.9	0.9	0.9
Heat dissipation			W	2 x 22	2 x 18	18	20	2 x 18	2 x 18	2 x 18	2 x 25
Operating time (2)	Closing "C"		ms	40…80	40…75	40...75	40…80	40…75	40…75	40…75	40…80
	Opening "O"		ms	130…230	100...170	100...170	100...200	100...170	100…170	100…170	100…200
Mechanical durability at Uc	In millions of operating cycles			5	0.5	10	1	0.5	0.5	0.5	0.5
Maximum operating rate at ambient temperature ≤ 55 °C	In operating cycles per hour			600	600	2400	1200	600	600	600	600
Connection				Min/max c.s.a.							
Flexible cable without cable end	1 or 2 conductors		mm²	1/4	1/4	1/4	1/4	1/4	1/4	1/4	1/4
Flexible cable with cable end	1 conductor		mm²	1/4	1/4	1/4	1/4	1/4	1/4	1/4	1/4
	2 conductors		mm²	1/2.5	1/2.5	1/2.5	1/2.5	1/2.5	1/2.5	1/2.5	1/2.5
Solid cable without cable end	1 or 2 conductors		mm²	1/4	1/4	1/4	1/4	1/4	1/4	1/4	1/4
Tightening torque			N.m	1.2	1.2	1.2	1.2	1.2	1.2	1.2	1.2
Mechanical latching				Mechanical latch blocks LA6DK must not be fitted on LC1F contactors. For similar type of operation, use magnetic latching contactors CR1F. See pages B10/16 to B10/20.							

(1) Equipped with 2 coils.

(2) The closing time "C" is measured from the moment the coil supply is switched on to initial contact of the main poles. The opening time "O" is measured from the moment the coil supply is switched off to the moment the main poles separate.

References: pages B10/2 and B10/3
Dimensions: pages B10/30 and B10/31
Schemes: pages B10/34 and B10/35

Characteristics

d.c. control circuit characteristics with LX4 coil

Contactor type				LC1 F780	LC1 F1000	LC1 SF1200 (1)	LC1 F1250	LC1 F1400	LC1 F1700	LC1 F2100	LC1F 2600
Rated control circuit voltage (Uc) ⎓			V	110…440	110…440	48…440	48…250	110…440	110…440	110…440	110…440
Control voltage limits (θ ≤ 55 °C)	Operation			0.85…1.1 Uc	0.85…1.1 Uc	0.85…1.1 Uc	0.85…1.1 Uc	0.85…1.1 Uc	0.85…1.1 Uc	0.85…1.1 Uc	0.85…1.1 Uc
	Drop-out			0.2…0.4 Uc	0.2…0.35 Uc	0.2…0.35 Uc	0.2…0.35 Uc	0.2…0.35 Uc	0.2…0.35 Uc	0.2…0.35 Uc	0.2…0.35 Uc
Average consumption at 20 °C and at Uc	⎓	Inrush	W	1960... 2420	2000... 2200	990... 1220	1420... 1920	2000... 2200	2000... 2200	2000... 2200	2130... 2880
		Sealed	W	42...52	8...10	4.54...8	6.5...12.5	8...10	8...10	8...10	13...25
Average operating time at Uc (2)	Closing "C"		ms	70…80	50…60	50…60	60…70	50…60	50…60	50…60	60…70
	Opening "O"		ms	100…130	45…60	45…60	40…50	45…60	45…60	45…60	40…50
				Note: the arcing time depends on the circuit switched by the poles. For all normal 3-phase applications. the arcing time is less than 10 ms. The load is isolated from the supply after a time equal to the sum of the opening time and the arcing time.							
Mechanical durability at Uc	In millions of operating cycles			5	0.5	1	1	0.5	0.5	0.5	0.5
Maximum operating rate at ambient temperature ≤ 55 °C	In operating cycles per hour			600	600	1200	1200	600	600	600	600
Cabling				Min/max c.s.a.							
Flexible cable without cable end	1 conductor		mm²	1/4	1/4	1/4	1/4	1/4	1/4	1/4	1/4
	2 conductors		mm²	1/4	1/4	1/4	1/4	1/4	1/4	1/4	1/4
Flexible cable with cable end	1 conductor		mm²	1/4	1/4	1/4	1/4	1/4	1/4	1/4	1/4
	2 conductors		mm²	1/2.5	1/2.5	1/2.5	1/2.5	1/2.5	1/2.5	1/2.5	1/2.5
Solid cable without cable end	1 conductor		mm²	1/4	1/4	1/4	1/4	1/4	1/4	1/4	1/4
	2 conductors		mm²	1/4	1/4	1/4	1/4	1/4	1/4	1/4	1/4
Tightening torque			N.m	1.2	1.2	1.2	1.2	1.2	1.2	1.2	1.2
Mechanical latching				Mechanical latch blocks LA6DK must not be fitted on LC1F contactors. For similar type of operation, use magnetic latching contactors CR1F. See pages B10/16 to B10/20.							

(1) LC1SF1200KUE, LC1SF1200MD are available.

(2) The operating times depend on the type of contactor electromagnet and its control mode. The closing time "C" is measured from the moment the coil supply is switched on to initial contact of the main poles. The opening time "O" is measured from the moment the coil supply is switched off to the moment the main poles separate.

References:
pages B10/2 and B10/3
Dimensions:
pages B10/30 and B10/31
Schemes:
pages B10/34 and B10/35

Characteristics

a.c. or d.c. control circuit characteristics with LXE coil [1]

Contactor type				**LC1SF1200** [3]	**LC1F1250** [4]	**LC1F2600** [5]
ECM [2] **reference**				**LA4EM250FK**	**LA4EM250FL**	**LA4EM250FL2**
Coil reference				**LXEFK250**	**LXEFL250**	**LXEFL2502**
Rated control circuit voltage (Uc)	50/60 Hz		**V**	**100…250**		
	⎓		**V**	**100…380**		**100…250**
Control voltage limits (< 55 °C) 50/60 Hz	Operation		**V**	85…275		
	Drop-out		**V**	< 60		< 65
⎓	Operation		**V**	85…418		85…275
	Drop-out		**V**	< 45		< 51
Average consumption at 20 °C and at Uc	Inrush	50/60 Hz	**VA rms**	360…550	460…730	1100...2300
		Cos φ		0.5…0.6		
		⎓	**W**	410…500	500…680	1300...2400
	Sealed	50/60 Hz	**VA**	5.0…8.0	7…10	21.1...24.5
		Cos φ		0.5…0.6		
		⎓		2.7…5.0	4.0…5.5	14...18
Embedded PLC [6] input according IEC 61131-2 type 2	Off state		**V DC**	0…5		
	On state			11…30		
Heat dissipation			**W**	2.2...5.5		16...20
Operating time	Closing "C"		**ms**	40…80		54...88
	Opening "O"		**ms**	6…54		20...28
Mechanical durability at Uc	In millions of operating cycles			1		0.5
Maximum operating rate at ambient temperature ≤ 55 °C	In operating cycles per hour			1200		600
Connection [7]						
Flexible cable without cable end	1 conductor			0.2/2.5		
Flexible cable with cable end	1 conductor			0.25/2.5		
Solid cable without cable end	1 conductor			0.2/2.5		
Tightening torque			**N.m**	0.6		

*(1) LXE coil shall be always used along with Electronic Control Module (ECM) **LA4EM250••**.*
*(2) Electronic Control Module enables wider coil operating voltage for the F range of contactors. ECM **LA4EM250••** shall be always used along with suitable type of **LXE••250** coils.*
*(3) **LC1SF1200KUE** is supplied with **LA4EM250FK** & **LXEFK250**.*
*(4) **LC1F1250KUE** is supplied with **LA4EM250FL** & **LXEFL250**.*
*(5) **LC1F2600KUE** is supplied with **LA4EM250FL2** & **LXEFL2502**.*
(6) PLC control connectors shall be provided by customer (Type MC 1.5/2-ST-3.81).
(7) Connection input is made to Electronic control module (ECM).

Ref.
High power contactors

References:
pages B10/2 and B10/3
Dimensions:
pages B10/30 and B10/31
Schemes:
pages B10/34 and B10/35

Dimensions

LC1F780

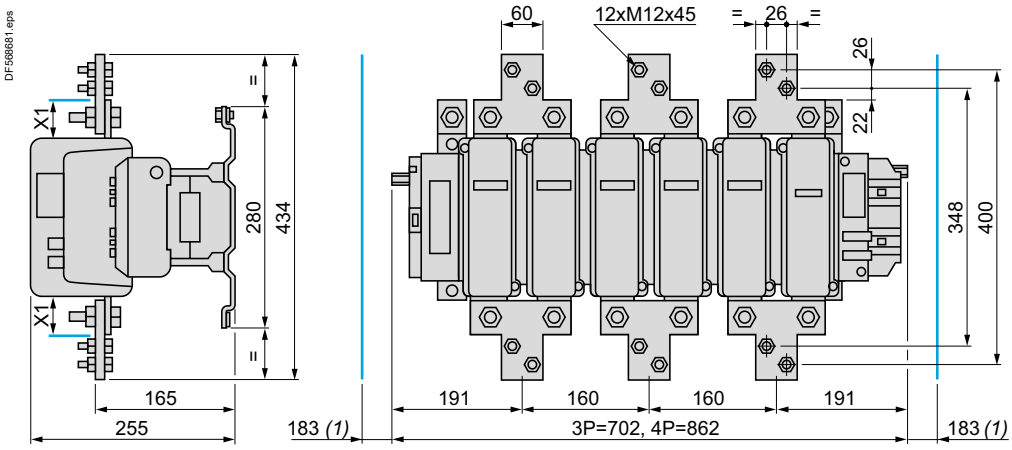

(1) Minimum distance required for coil removal.

X1 (mm) = Minimum electrical clearance according to operating voltage and breaking capacity.

Voltage	200…500 V	690…1000 V
X1 (mm)	30	35

Fixing centres of LC1F7804

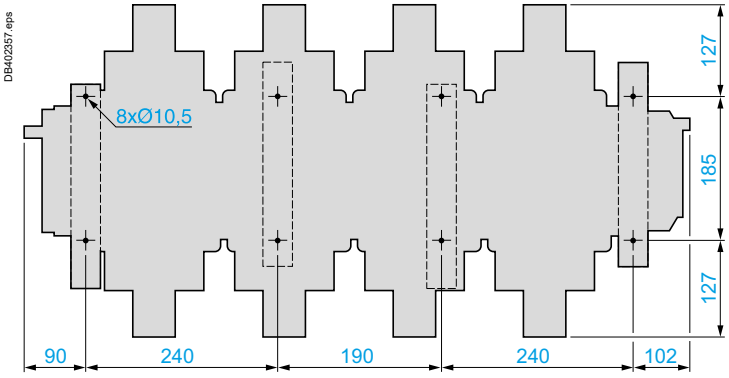

Fixing centres of LC1F780

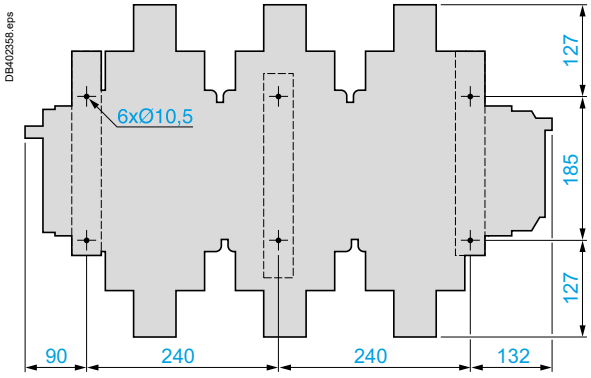

LC1SF1200

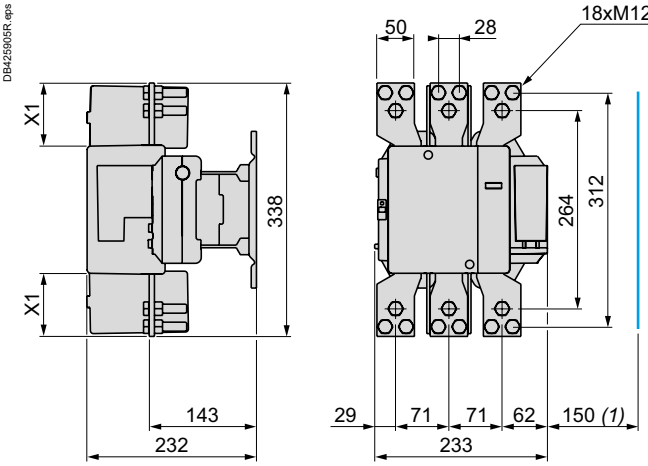

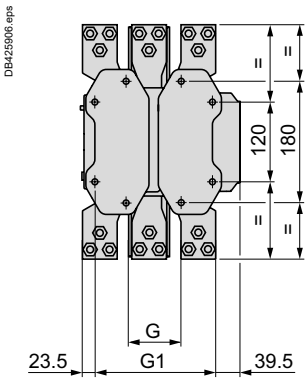

(1) Minimum distance required for coil removal.

X1 (mm) = Minimum electrical clearance according to operating voltage and breaking capacity.

Voltage	200...500 V	≤ 690 V
X1 (mm)	20	30

G (2)	Gmin	Gmax	G1 (2)	Gmin	Gmax
80	66	120	170	156	210

(2) Factory setting.

References:
pages B10/2 and B10/3

Characteristics:
pages B10/24 to B10/28

Schemes:
page B10/35

Life Is On Schneider Electric

Dimensions

LC1F1250

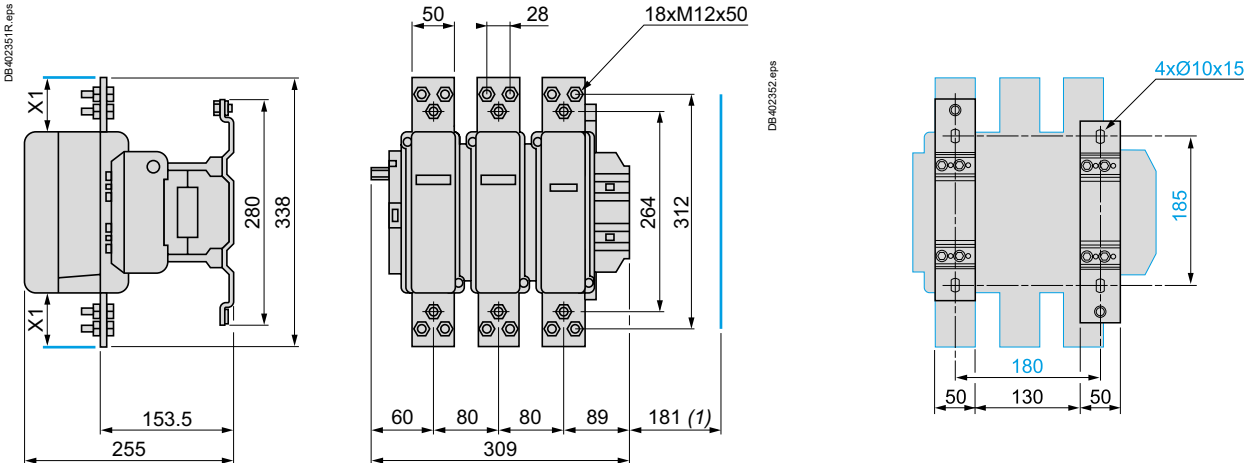

(1) Minimum distance required for coil removal.

X1 (mm) = Minimum electrical clearance according to operating voltage and breaking capacity.

Voltage	200…500 V	690…1000 V
X1 (mm)	20	30

LC1F1000, LC1F1400, LC1F1700 and LC1F2100

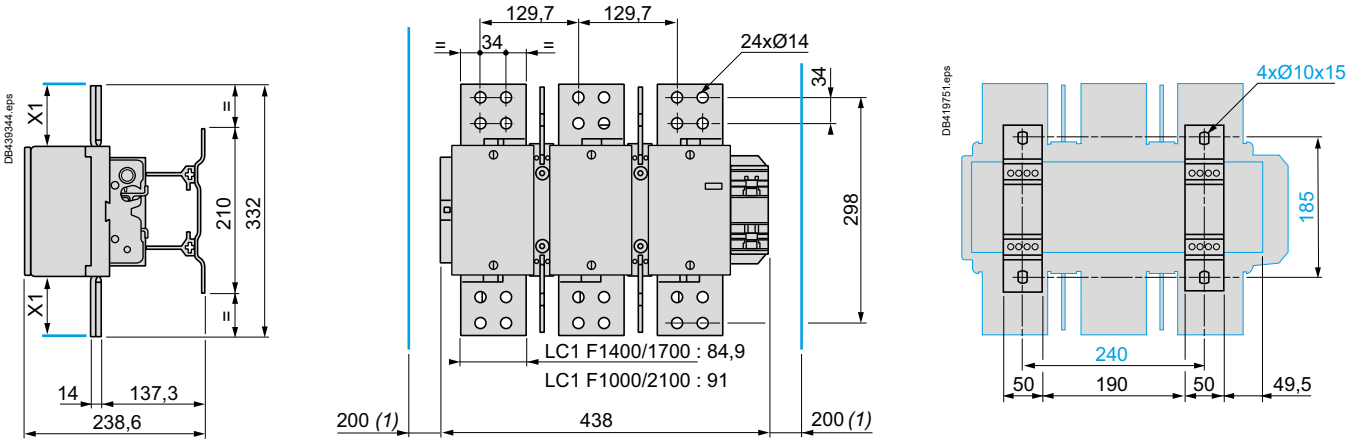

(1) Minimum distance required for coil removal.

X1 (mm) = Minimum electrical clearance according to operating voltage and breaking capacity.

Voltage	200…500 V	690…1000 V
X1 (mm)	90	100

LC1F2600

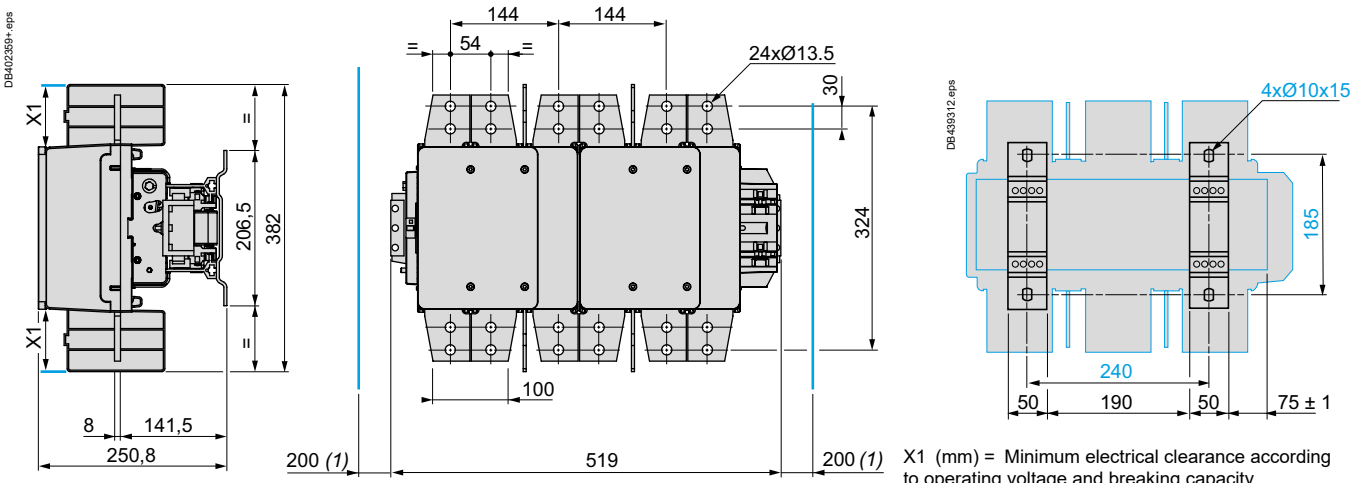

(1) Minimum distance required for coil removal.

X1 (mm) = Minimum electrical clearance according to operating voltage and breaking capacity.

Voltage	200…500 V	690…1000 V
X1 (mm)	90	100

References:
pages B10/2 and B10/3

Characteristics:
pages B10/24 to B10/28

Schemes:
page B10/35

Dimensions

Right-angled connectors LA9F2100
(set of 6) for rear connection

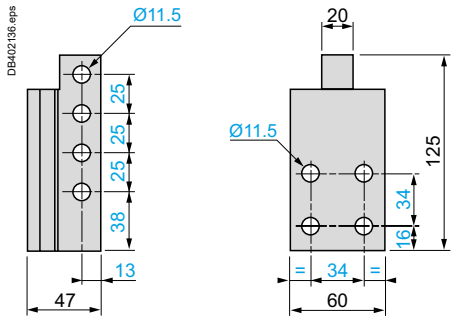

Right-angled connectors LA9F2600
(set of 6) for rear connection

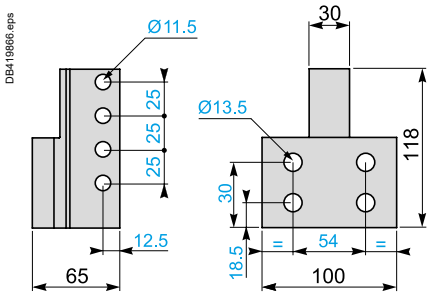

Electronic Control Module for LXE●●250 coils / LXE●●2502 coils

LA4EM250●● / LA4EM250●●2

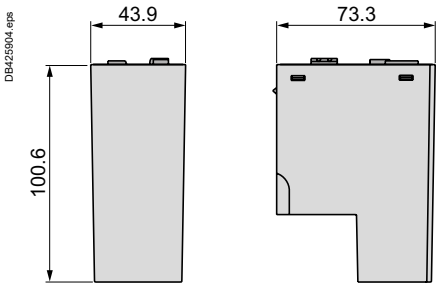

Ref.

High power contactors

References:
pages B10/8 and B10/9

Life Is On Schneider Electric

Mounting

LC1F780

On 2 notched rails AM1EC●●●

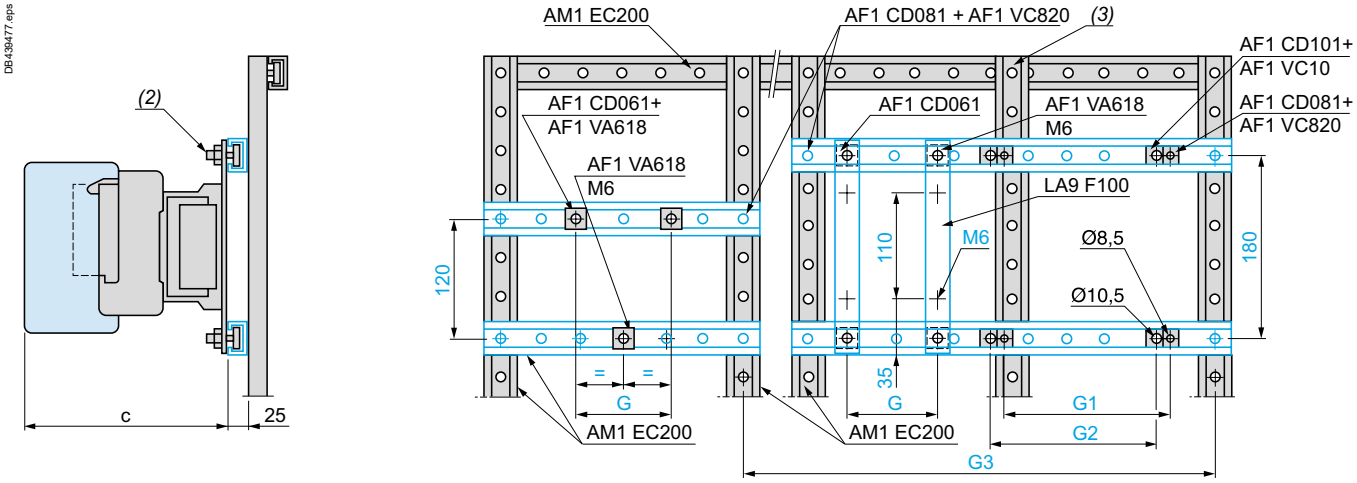

LC1		F780
c (1)	3P	255
	4P	255
G (M6)	3P	–
	4P	–
G1 (∅ 8.5)	3P	–
	4P	–
G2 (∅ 10.5)	3P	See page B10/30
	4P	See page B10/30

(1) See X1 (minimum electrical clearance) page B10/30.
*(2) **AF1CD●●●** and **AF1VA●●●**.*
*(3) This **AM1EC200** upright is required when G2 or G3 is greater than 700 mm (please consult your Regional Sales Office).*

Ref.
High power contactors

Schemes

Contactors

3 and 4-pole contactors

LC1F1250 (coil LX1F ∼)

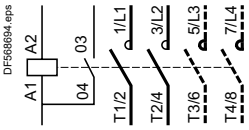

LC1F1250 (coil LX4F ⎓)

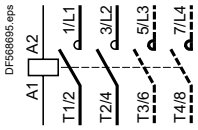

LC1F780 ∼ or ⎓

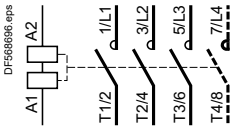

LC1F1000
LC1F1400 ∼ or ⎓ , LC1F1700 ∼ or ⎓
LC1F2100 ∼ or ⎓ , LC1F2600 ∼ or ⎓

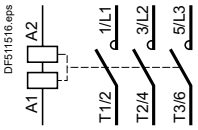

Coils

Standard ∼ coils

LX1FK●●●/ LX1FL●●●

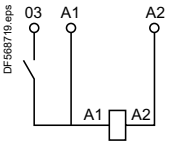

LX1FX
Rectifier supplied and fixed on the contactor

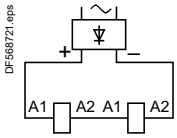

Standard ⎓ coils

LX4FK, FL, FX (1)

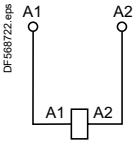

(1) 2 coils in series.

Specific wiring diagrams for CR1F contactors

Internal latching/unlatching diagram

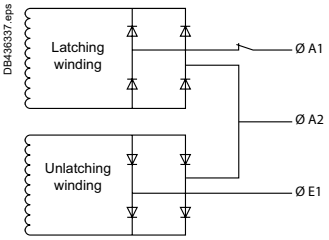

Control diagrams

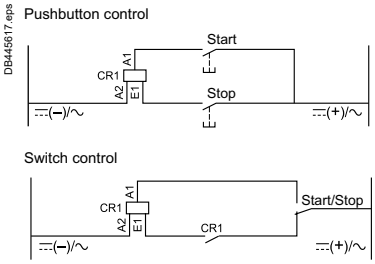

Warning: terminal A2 is common to both windings in all cases.

Contactors CR1F with thermal overload relay

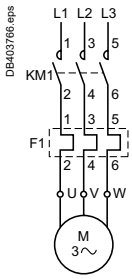

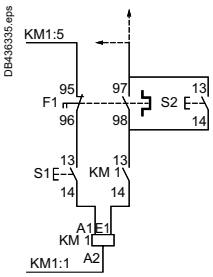

Schemes

Add-on blocks

Instantaneous auxiliary contacts

1 N/O LADN10 [(1)]

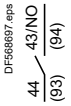

1 N/C LADN01 [(1)]

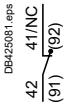

1 N/O + 1 N/C LADN11

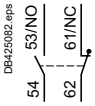

2 N/O LADN20

2 N/C LADN02

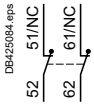

2 N/O + 2 N/C LADN22

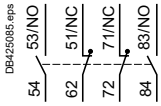

1 N/O + 3 N/C LADN13

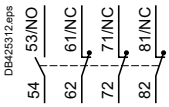

4 N/O LADN40

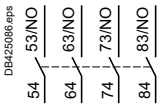

4 N/C LADN04

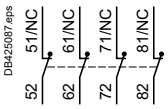

2 N/O + 2 N/C [(2)] **LADC22**

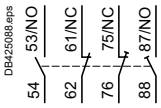

3 N/O + 1 N/C LADN31

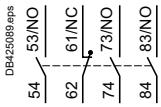

(1) Items in brackets: See "D contactors".

(2) 1 N/O + 1 N/C make before break.

Instantaneous auxiliary contacts with terminal referencing conforming to standard EN 50012 (References: pages B10/6 and B10/7)

1 N/O + 1 N/C
LADN11P

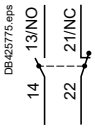

1 N/O + 1 N/C
LADN11G

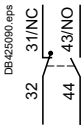

2 N/O + 2 N/C
LADN22P

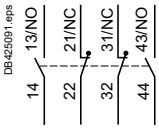

2 N/O + 2 N/C
LADN22G

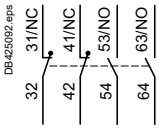

Dust and damp protected instantaneous auxiliary contacts

2 N/O (24-50 V)
LA1DX20

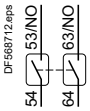

2 N/O (5-24 V) with 2 earth terminals for screened cables
LA1DY20

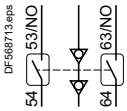

2 N/O protected (24-50 V) + 2 N/O standard
LA1DZ40

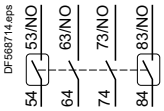

2 N/O protected (24-50 V) + 1 N/O + 1 N/C standard
LA1DZ31

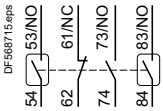

Time delay auxiliary contacts

On-delay 1 N/O +1 N/C LADT●

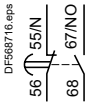

Off-delay 1 N/O + 1 N/C LAD R●

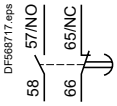

On-delay 1 N/C + 1 N/O break before make LAD S●

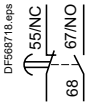

Ref.

References:
pages B10/2 and B10/3

Characteristics:
pages B10/24 to B10/28

PB123835.eps

LC1FG150

Shockproof contactor specificity

In an environment subject to severe mechanical shocks, unwanted closing of a contactor's poles and the serious consequences of this, is not permissible.

Shockproof contactors **LC1FG150** to **FG630** are equipped with an auxiliary electromechanical device which ensures that the contactor is mechanically locked in the “open” position when it’s main electromagnet is not energised.

If the contactor is subjected to mechanical impact, from back to front or from front to back, accidental closing of the poles is then impossible.

In addition, accidental opening of the poles (when the contactor is in the “on” position), is virtually impossible due to the significant pull-in force characteristic of these contactors.

PB123836.eps

LC1FG265

Applications

- **Marine:** on-board equipment, windlasses, capstans, winches, etc…
- **Military equipment:** land, sea, launching silos.
- **Heavy mechanical handling systems:** travelling cranes, cranes, gantries.
- **Conveying and handling:** lifts, hoists, conveyors.
- **Equipment for power stations.**
- **Distribution boards.**

References:
page B10/4
Dimensions, schemes:
pages B10/41 and B10/46

Description of shockproof device

Shockproof contactors **LC1FG●●●** are equipped with:
- a lever 1 that is rotated by the core of the contactor's electromagnet.
- an auxiliary electromagnet (EV) for the locking function.
- an RC circuit (Resistor-Capacitor) to limit overvoltage.

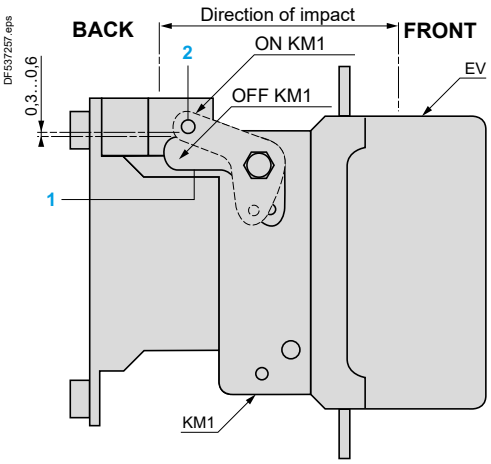

Operation

- In the 'off' position (contactor open and not energised) the core 2 of the electromagnet (EV) locks the lever 1 and therefore the contactor.
- The coils (KM1) and (EV) are energised simultaneously, the core 2 releases the lever 1 and allows the contactor to close.
- De-energisation of the locking electromagnet (EV) is achieved by an auxiliary contact within the contactor.

The core 2 rests freely in lever 1.
- On de-energisation of coil KM1, the moving contact drops out.

Core 2, under spring pressure, once again locks lever 1.

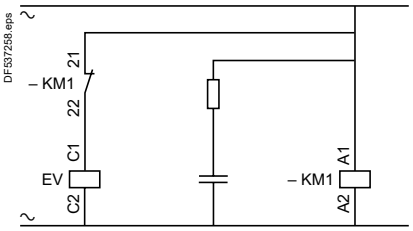

Ref.
High power contactors

Characteristics - Durability (AC)

Use in category AC-3 (Ue ≤ 440 V)

Operational current and power (θ ≤ 55 °C)

Contactors			LC1FG150	LC1FG185	LC1FG265	LC1FG400	LC1FG500	LC1FG630
Operational current		**A**	150	185	265	400	500	630
Operational power Standard power ratings of motors)	220/230 V	**kW**	40	55	75	110	147	200
		hp	*54*	*75*	*100*	*150*	*200*	*270*
	380/400 V	**kW**	75	90	132	200	250	335
		hp	*100*	*185*	*180*	*270*	*340*	*450*
	415 V	**kW**	80	100	140	220	280	375
		hp	*110*	*136*	*180*	*300*	*380*	*500*
	440 V	**kW**	80	100	140	250	295	400
		hp	*110*	*136*	*190*	*340*	*400*	*545*
	500 V	**kW**	90	110	160	257	355	400
		hp	*125*	*150*	*220*	*350*	*480*	*545*
	660/690 V	**kW**	100	110	160	280	335	450
		hp	*136*	*150*	*220*	*380*	*450*	*600*
	1000 V	**kW**	65	100	147	185	335	450
		hp	*85*	*136*	*200*	*250*	*450*	*610*

Maximum operating rate (operating cycles/hour) (1)

On-load factor	Operational power	LC1FG150	LC1FG185	LC1FG265	LC1FG400	LC1FG500	LC1FG630
≤ 85 %	P	750	750	750	500	500	500
≤ 85 %	0.5 P	2000	2000	2000	1200	1200	1200
≤ 25 %	P	1200	1200	1200	1200	1200	1200

(1) Depending on the operational power and the on-load factor (θ ≤ 55 °C).

Electrical durability in utilisation category AC-3 (Ue ≤ 440 V)

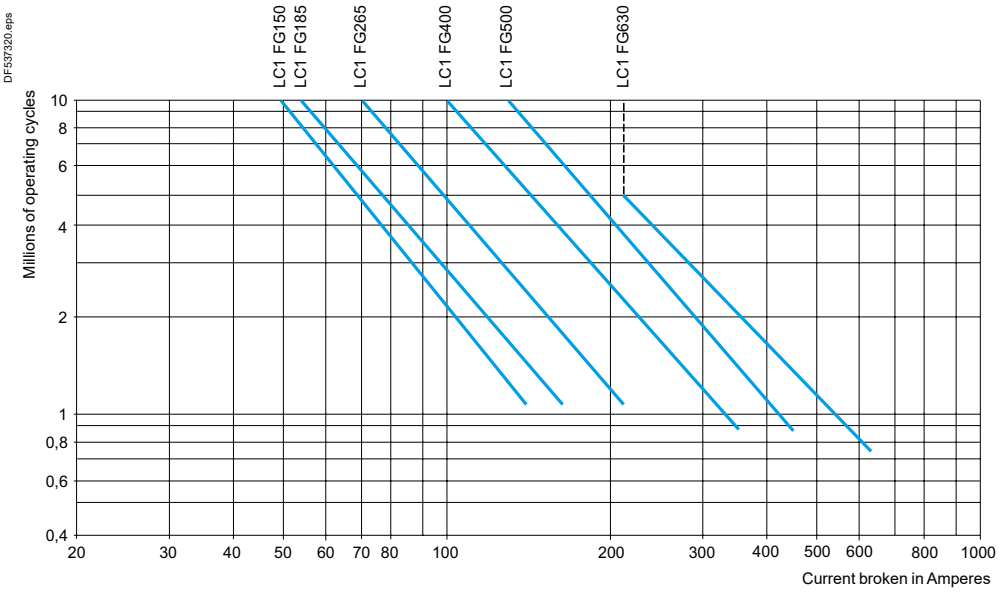

Control of 3-phase asynchronous squirrel cage motors with breaking whilst running.
The current broken (Ie) in category AC-3 is equal to the rated operational current of the motor.
Example:
Asynchronous motor with P = 55 kW - Ue = 380 V - Ie = 105 A
4 million operating cycles required.
The above selection curves show the contactor rating needed: **LC1FG265**.

References:
page B10/4

Dimensions, schemes:
pages B10/41 and B10/46

Characteristics - Durability (AC)

Use in category AC-1 (Ue ⩽ 440 V)

Contactors				LC1FG150	LC1FG185	LC1FG265	LC1FG400	LC1FG500	LC1FG630
Connection	Cable	C.s.a.	mm²	120	150	240	–	–	–
	Bar	Number		–	–	–	2	2	2
		C.s.a.	mm	–	–	–	30 x 5	40 x 5	60 x 5
Maximum operating rate in operating cycles/hour				600	600	600	600	600	600
Operational current AC-1		⩽ 40 °C	A	250	270	350	500	700	1000
		⩽ 55 °C	A	220	240	300	430	580	850
		⩽ 70 °C (1)	A	170	180	250	340	500	700

(1) Only for operation with coil supplied at Uc.

Increase in operational current by parallel connection of poles

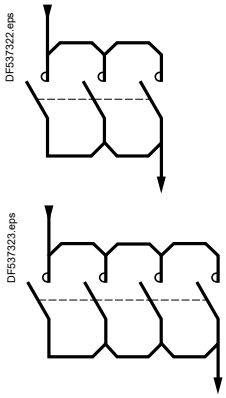

Apply the following multiplying factors to the current values given above.
The factors take into account the often unbalanced current distribution between the 2 poles:
- 2 poles in parallel: K = 1.6
- 3 poles in parallel: K = 2.25
- 4 poles in parallel: K = 2.8.

Recommended connection scheme to equalise the currents in each pole (see opposite).

Electrical durability in utilisation category AC-1 (Ue ⩽ 440 V)

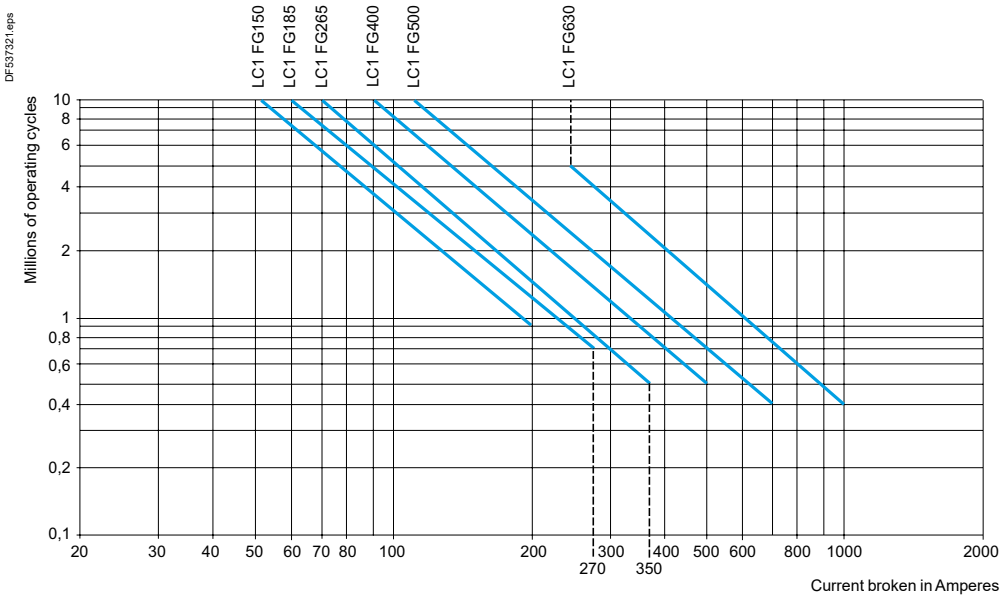

Example:
Control of resistive circuits (cos φ ⩾ 0.95).
The current broken (Ic) in category AC-1 is equal to the current (Ie) normally drawn by the load.
Ue = 220 V - Ic = Ie = 300 A - θ = 40 °C.
1 million operating cycles required.
The above selection curves show the contactor rating needed: **LC1FG400**.

References:
page B10/4

Dimensions, schemes:
pages B10/41 and B10/46

Characteristics

Environment

Contactor type			LC1FG265	LC1FG500
Rated insulation voltage (Ui)	Conforming to IEC 60947-4-1	V	1000	
Rated impulse withstand voltage (Uimp)	Coil not connected to the power circuit	kV	8	
Conforming to standards			IEC/EN 60947-4-1	
Product certifications			N.A.T.O.	
Degree of protection	Conforming to IEC 60529		IP 20 front face with shrouds LA9F	
Ambient air temperature around the device	Storage	°C	-60…+80	
	Operation	°C	-5…+55	
	Permissible at Uc (1)	°C	-40…+70	
Maximum operating altitude	Without derating	m	3000	
Operating positions	Without derating		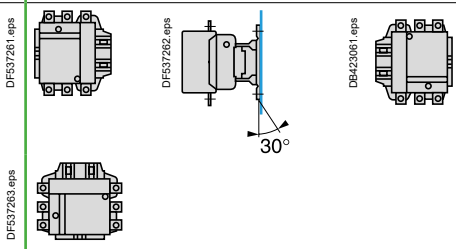	
	With derating (3)		**Fixing A** 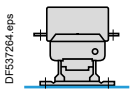 **Fixing B** 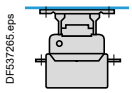	
	Not to be used		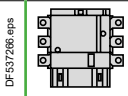	
Shock resistance (2) Conforming to IEC/EN 60068-2-27			12 g, 50 ms on the three axes: X, Y, Z	
			15 g, 11 ms on the three axes: X, Y, Z	

*(1) In these conditions, it is recommended that coils LX9F be used for contactor sizes **FG150** to **FG265**.*
(2) In the least favourable direction, without change of contact state (coil at Uc).
(3) Horizontal fixing:
- the operational current AC-1 is equivalent to 80 % of the value indicated in the catalogue
- breaking and making capacities not guaranteed
- mechanical and electrical durabilities not guaranteed.

Derating of pull-in and drop-out voltage

Contactors LC1		FG265	FG500
Fixing A	Pull-in	75 %	80 %
	Drop-out	105 %	110 %
Fixing B	Pull-in	115 %	120 %
	Drop-out	90 %	95 %

Characteristics

Pole characteristics

Contactor type			LC1FG265	LC1FG500
Number of poles			3	3
Rated operational current (Ie) (Ue ≤ 440 V)	In AC-3, θ ≤ 70 °C θ ≤ 55 °C	A	265/250	500/500
	In AC-1, θ ≤ 70 °C θ ≤ 55 °C	A	300/250	580/500
Rated operational voltage (Ue)	Up to	V	1000 (2)	1000 (2)
Frequency limits	Of the operational current (1)	Hz	25 to 200	25 to 200
Conventional thermal current	θ ≤ 40	°C	350	700
Rated making capacity	I rms conforming to IEC 60947-4-1	A	Making current: 10 x I in AC-3	
Rated breaking capacity	I rms conforming to IEC 60947-4-1	A	Making and breaking current: 8 x I in cat. AC-3	
Permissible short time rating No current flowing for preceding 60 minutes with θ ≤ 40 °C	For 1.5 or 10 s	A	2200	4200
	For 30 s	A	1230	3200
	For 1 mn	A	950	2400
	For 3 mn	A	620	1500
	For 10 mn	A	480	1200
Fuse protection against short-circuits (U ≤ 440 V)	Motor circuit (type aM)	A	315	500
	With thermal overload relay (type gG)	A	500	800
	gG fuses	A	400	800
Average impedance per pole	At Ith and 50 Hz	mΩ	0.3	0.18
Power dissipation per pole for the above operational currents	AC-3	W	21	45
	AC-1	W	37	88
Cabling Minimum c.s.a.	Bar — No. of bars		2	2
	Bar — Bar	mm	32 x 4	40 x 5
	Cable with lug	mm²	240	2 x 240
	Cable with connector	mm²	240	–
	Bolt diameter	mm	Ø10	Ø10
Tightening torque	Power circuit connections	N.m	18	35

(1) Sine wave without interference. Above these values, please consult your Regional Sales Office.
(2) Ue ≤ 690 V in AC-3; Ue ≤ 1000 V in AC-1.

References: page B10/4
Dimensions, schemes: pages B10/49 and B10/50

Characteristics

a.c. control circuit characteristics with LX1 coil

Contactor type					LC1FG265	LC1FG500
Rated control circuit voltage (Uc)		50 or 60 Hz		**V**	48…440	110…440
Control voltage limits (θ ≤ 55 °C)	40…400 Hz coils	Operation			0.85…1.1 Uc	0.85…1.1 Uc
		Drop-out			0.35…0.55 Uc	0.3…0.5 Uc
Average consumption at 20 °C and at Uc	∿ 50 Hz	Inrush	40…400 Hz coil	**VA**	650	1100
			Cos φ		0.9	0.9
		Sealed	40…400 Hz coil	**VA**	10	18
			Cos φ		0.9	0.9
Heat dissipation				**W**	8	18
Operating time (1)		Closing "C"		**ms**	40…65	40…75
		Opening "O"		**ms**	100…170	100…170
Mechanical durability at Uc		In millions of operating cycles			10	10
Maximum operating rate at ambient temperature ≤ 55 °C		In operating cycles per hour			2400	2400
Cabling Min/max c.s.a.	Flexible cable without cable end		1 or 2 conductors	**mm²**	1/4	1/4
	Flexible cable with cable end		1 conductor	**mm²**	1/4	1/4
			2 conductors	**mm²**	1/2.5	1/2.5
	Solid cable without cable end		1 or 2 conductors	**mm²**	1/4	1/4
Tightening torque				**N.m**	1.2	1.2

Characteristics of the locking electromagnet (shockproof device)

Contactor type			LC1FG265	LC1FG500
Control circuit voltage 40...400 Hz		**V**	48…440	110…440
Inrush consumption		**VA**	100	100
Maximum energisation time at Uc		**ms**	20	20
Maximum operating rate	In operating cycles per hour		2400	2400
Mechanical durability at Uc	In millions of operating cycles		1×10^6	1×10^6

(1) The closing time "C" is measured from the moment the coil supply is switched on to initial contact of the main poles.
The opening time "O" is measured from the moment the coil supply is switched off to the moment the main poles separate.

References:
page B10/4

Dimensions, schemes:
pages B10/41 and B10/46

Life Is On Schneider Electric

Characteristics

Environment

Contact block type			LADN	LADT and LADS	LADR
Conforming to standards			IEC 60947-5-1, EN 60947-5-1		
Product certifications			UL, CSA		
Degree of protection	Conforming to IEC 60529		Protection against direct finger contact IP2X		
Ambient air temperature around the device	Storage	°C	-60…+80		
	Operation	°C	-5…+60		
	Permissible for operation at Uc	°C	-40…+70		
Maximum operating altitude	Without derating	m	3000		
Cabling	Phillips n° 2 and Ø6 mm. Flexible or solid cable with or without cable end	mm²	Min: 1 x 1; max: 2 x 2.5		

References:
page B10/15

Dimensions and schemes:
page B10/46

Characteristics

Instantaneous and time delay contact characteristics

Contact block type				LADN	LADT and LADS	LADR
Number of contacts				1 or 4	2	2
Rated operational voltage (Ue)	Up to		V	660		
Rated insulation voltage (Ui)	Conforming to IEC 60947-5-1		V	690		
	Conforming to UL, CSA		V	600		
Conventional thermal current (Ith)	For ambient temperature ≤ 60 °C		A	10		
Frequency of the operational current			Hz	25…400		
Minimum switching capacity	U min		V	17		
	I min		mA	5		
Short-circuit protection	Conforming to IEC 60947-5-1 and VDE 0660. gG fuse		A	10		
Rated making capacity	Conforming to IEC 60947-5-1, I rms		A	∿ 140; ⎓ 250		
Short-time rating	Permissible for	1 s	A	100		
		500 ms	A	120		
		100 ms	A	140		
Insulation resistance			MΩ	> 10		
Non-overlap time	Guaranteed between N/C and N/O contacts		ms	1.5 (on energisation and on de-energisation)		
Time delay (LADT, R and S contact blocks) Accuracy only valid for setting range indicated on the front face	Ambient air temperature for operation		°C	–	-40…+70	-40…+70
	Repeat accuracy			–	±2 %	±2 %
	Drift up to 0.5 million operating cycles			–	+15 %	+15 %
	Drift depending on ambient air temperature			–	0.25 % per °C	0.25 % per °C
Mechanical durability	In millions of operating cycles			30	5	5

Rated operational power of contacts Conforming to IEC 60947-5-1		V	24	48	110/127	220/230	380/400	440	600
	1 million operating cycles	VA	150	300	400	480	500	500	500
	3 million operating cycles	VA	80	170	250	290	320	320	320
	10 million operating cycles	VA	30	65	90	120	130	130	130
	Occasional making capacity	VA	1200	2600	7000	13 000	15 000	13 000	9000

References:
page B10/15

Dimensions and schemes:
page B10/46

Life Is On Schneider Electric

Dimensions

LC1FG150, FG185 and FG265

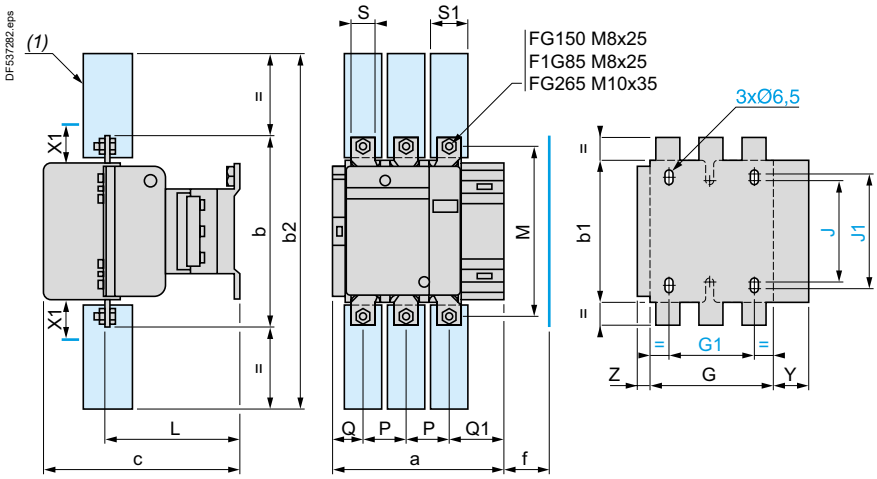

X1 (mm) = Minimum electrical clearance according to operating voltage and breaking capacity.

LC1	200…500 V	600…1000 V
FG150	10	15
FG185	10	15
FG265	10	15

(1) Power terminal protection shroud (see page B10/10).

LC1	a	b	b1	b2	c	f	G	G1	J	J1	L	M	P	Q	Q1	S	S1	Y	Z
FG150	181	170	137	301	180	131	106	80	106	120	116	150	40	26	57.5	20	34	44	13.5
FG185	183.5	174	137	305	190	130	111	80	106	120	122.5	154	40	29	59.5	20	34	44	13.5
FG265	217.5	203	145	375	222	147	142	96	106	120	150	178	48	39	66.5	25	44.5	38	21.5

f = minimum distance required for coil removal.

LC1FG400 and FG500

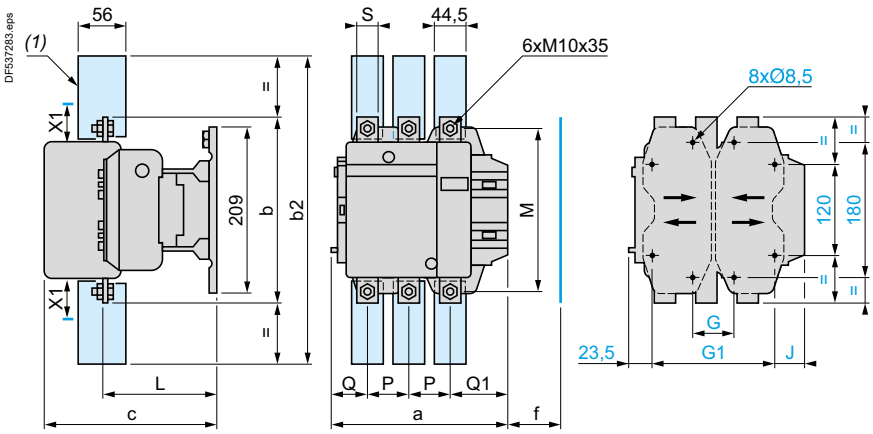

X1 (mm) = Minimum electrical clearance according to operating voltage and breaking capacity.

LC1	200…500 V	600…1000 V
FG400	15	20
FG500	15	20

(1) Power terminal protection shroud (see page B10/10).

LC1	a	b	b2	c	f	G supplied	G min.	G max.	G1 supplied	G1 min.	G1 max.	J	L	M	P	Q	Q1	S
FG400	237	206	375	234	146	80	66	102	223	156	192	19.5	160	181	48	75	74	25
FG500	257	238	400	247	150	80	66	120	223	156	210	39.5	181	208	55	78	77	30

f = minimum distance required for coil removal.

Dimensions

LC1FG630

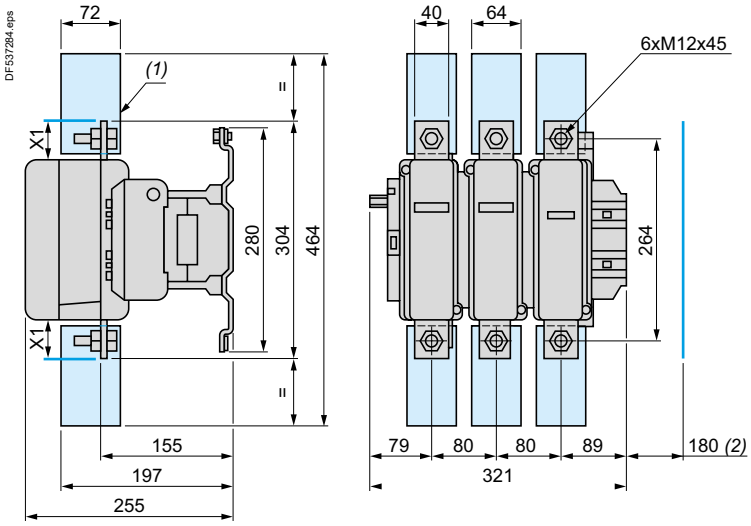

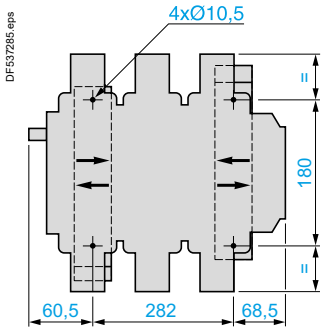

X1 (mm) = Minimum electrical clearance according to operating voltage and breaking capacity.

LC1	200…500 V	690…1000 V
FG630	20	30

(1) Power terminal protection shroud (see page B10/10).
(2) Minimum distance required for coil removal.

Schemes

Contactors LC1-FG150 to FG630

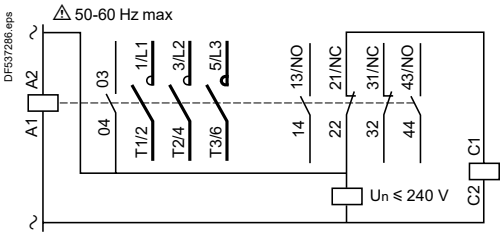

Add-on blocks

Instantaneous auxiliary contacts

1 N/O LADN10

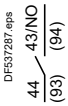

1 N/C LADN01

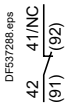

2 N/O + 2 N/C LADN22

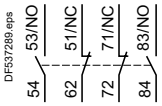

4 N/O LADN40

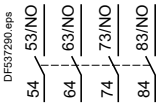

4 N/C LADN04

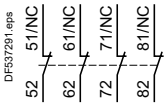

3 N/O + 1 N/C LADN31

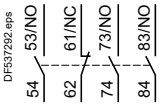

Time delay auxiliary contacts

On-delay 1 N/O + 1 N/C LADT●

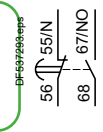

Off-delay 1 N/O + 1 N/C LADR●

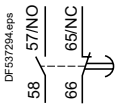

Coils ∿

LX1FH, FJ, FK and FL

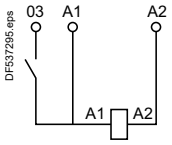

References:
pages B10/4, B10/16 and B10/17
Characteristics:
pages B10/36 to B10/44

PB108370.eps

CR1F500

Magnetic latching contactors

Magnetic latching contactors of both block and bar mounted types are fitted with a special electromagnet which enables them to remain in the “On” position when the coil is no longer energised.

Applications

The special properties of magnetic latching contactors make them suitable for a large number of applications.

Properties

■ Retention of the sequence memory in automatic control equipment in the event of loss of control voltage.
■ Energy saving, since the source of supply to the coil does not need to supply current when the contactor is latched in the closed state.
■ Change of state from “Closed” to “Open” by current signal through the coil.
■ Unaffected by mains interference.
■ Utilisation of contactors beyond their breaking capacity, as operations are performed off-load.
■ Contactors are silent in the latched position.

Applications

■ Refineries, power stations, excitation circuits.
■ Contactors remaining in the closed state for long periods.
Examples: refineries, power supplies, low voltage distribution.
■ Selective opening control.
■ No unwanted opening and closing of the main power poles.
■ Current carrying at voltages up to 1000 Volts.

Operation of the electromagnet

CR1F block contactors

CR1F magnetic latching contactors are fitted with a double coil with 3 terminals comprising a latching winding and an unlatching winding. The 2 windings have a common point which can necessitate special wiring precautions when the latching supply is separate from the unlatching supply.

The power supplies may be a.c. or d.c. For d.c. operation, the polarities indicated must be complied with.

Operating precautions:
■ the 2 windings must not be supplied simultaneously
■ a winding must not be supplied continuously
■ supply to the coils must be via pulsed contacts.

Manual opening:
if the control voltage is not present, the contactor can be unlatched manually.

Latching is obtained by direct supply of the coil in one direction of current flow.

Unlatching is obtained by a reverse current, adjusted by resistors.

References:
pages B10/5, B10/16 to B10/20
Dimensions:
pages B10/58 to B10/61

Characteristics - Squirrel cage motor

CR1F selection - Squirrel cage motor Direct On Line starter

Continuous or intermittent duty up to 30 operating cycles/hour

Motor (1) 220 V 230 V			380 V 400 V			415 V			440 V			3-pole contactor (2)	3-pole differential thermal overload relay		3 fuses Type	
													Reference	Setting range	aM	BS-88
P		In	P		In	P		In	P		In	Reference			Rating	
kW	*HP*	A	kW	*HP*	A	kW	*HP*	A	kW	*HP*	A			A	A	A
25	*35*	85	**–**	–	–	**–**	–	–	**–**	–	–	**CR1F150**	**LR9F5367**	60…100	100	125
30	*40*	103	**51**	*70*	98	**55**	*75*	100	**59**	80	97	**CR1F150**	**LR9F5369**	90…150	100	160
33	*45*	113	**55**	*75*	105	**–**	–	–								
–	–	–	**59**	*80*	112	**59**	*80*	105	**63**	*85*	109	**CR1F150**	**LR9F5369**	90…150	125	160
–	–	–	**63**	*85*	117	**63**	*85*	115	**–**	–	–					
37	*50*	126	**75**	*100*	138	**75**	*100*	135	**75**	*100*	125	**CR1F150**	**LR9F5369**	90…150	160	200
40	*54*	134	**–**	–	–	**–**	–	–	**80**	*110*	131					
45	*60*	150	**80**	*110*	147	**80**	*110*	138	**90**	*125*	146	**CR1F185**	**LR9F5369**	90…150	160	200
51	*70*	170	**90**	*125*	170	**90**	*125*	165	**100**	*136*	162	**CR1F185**	**LR9F5371**	132…220	200	250
55	*75*	182	**–**	–	–	**100**	*136*	182	**–**	–	–					
59	*80*	195	**100**	*138*	188	**110**	*150*	200	**110**	*150*	178	**CR1F265**	**LR9F5371**	132…220	250	315
63	*85*	203	**110**	*150*	205	**–**	–	–	**129**	*175*	209					
75	*100*	240	**129**	*175*	242	**129**	*175*	230	**132**	*180*	215	**CR1F265**	**LR9F7375**	200…330	250	315
–	–	–	**132**	*180*	245	**132**	*180*	240	**–**	–	–					
–	–	–	**–**	–	–	**140**	*190*	250	**140**	*190*	227	**CR1F265**	**LR9F7375**	200…330	315	400
80	*110*	260	**140**	*190*	260	**147**	*200*	260	**147**	*200*	236	**CR1F400**	**LR9F7375**	200…330	315	400
–	**–**	**–**	**147**	*200*	273	**150**	*205*	270	**150**	*205*	246					
–	**–**	**–**	**150**	*205*	280	**160**	*220*	280	**160**	*220*	256					
90	*125*	295	**160**	*220*	300	**–**	–	–	**180**	*245*	289	**CR1F400**	**LR9F7375**	200…330	315	400
–	–	–	**–**	–	–				**185**	*250*	295					
100	*136*	325	**180**	*245*	333	**180**	*245*	320	**200**	*270*	321	**CR1F400**	**LR9F7379**	300…500	400	500
110	*150*	356	**185**	*250*	342	**185**	*250*	325	**220**	*300*	353					
–	–	–	**200**	*270*	370	**200**	*270*	340	**250**	*340*	401	**CR1F400**	**LR9F7379**	300…500	400	500
						220	*300*	385	**–**	–	–					
129	*175*	420	**220**	*300*	408	**–**	–	–	**257**	*350*	412	**CR1F500**	**LR9F7379**	300…500	500	630
132	*180*	425	**250**	*340*	460	**250**	*340*	425	**280**	*380*	450	**CR1F500**	**LR9F7381**	380…630	500	630
140	*190*	450	**–**	–	–	**257**	*350*	450	**–**	–	–					
147	*200*	472	**–**	–	–	**–**	–	–	**295**	*400*	473	**CR1F500**	**LR9F7381**	380…630	500	630
–	–	–	**257**	*350*	475	**280**	*380*	475	**300**	*410*	481	**CR1F630**	**LR9F7381**	380…630	500	630
			–	–	–	**295**	*400*	500	**–**	–	–					
150	*205*	483	**280**	*380*	510	**300**	*410*	510	**315**	*430*	505	**CR1F630**	**LR9F7381**	380…630	630	800
160	*220*	520	**295**	*400*	546	**315**	*430*	535	**335**	*450*	518					
180	*245*	578	**300**	*410*	565	**335**	*450*	550	**355**	*480*	549	**CR1F630**	**LR9F7381**	380…630	630	800
185	*250*	595	**315**	*430*	584	**355**	*480*	580	**375**	*500*	575					
200	*270*	626	**335**	*450*	620	**375**	*500*	610	**400**	*454*	611	**CR1F630**	**LR9F7381**	380…630	800	1000

(1) The ratings are for standard 220/230 V, 380/400 V, 415 or 440 V motors. The overload relays should preferably be set to the motor full-load current shown on the motor rating plate. For other power ratings, select the overload relay with the appropriate range; the associated contactor and fuses must have ratings equal to or immediately greater than In.
(2) Reference to be completed, see page B10/40.

Ref.

High power contactors

References:
pages B10/5, B10/16 to B10/20

Dimensions:
pages B10/58 to B10/61

Life Is On Schneider Electric

Characteristics - AC

Rated operational current in AC-3 (θ ≤ 55 °C)							
Contactor size		**CR1F 150**	**CR1 F185**	**CR1F 265**	**CR1F 400**	**CR1 F500**	**CR1F 630**
440 V	**A**	150	185	265	400	500	630
500 V	**A**	135	175	245	385	500	540
660/690 V	**A**	130	140	230	365	435	470
1000 V	**A**	47	73	95	135	270	330
Rated operational power (standard motor power ratings)							
220…240 V	**kW**	40	55	75	110	147	200
	HP	*54*	*75*	*100*	*150*	*200*	*270*
380…400 V	**kW**	75	90	132	200	250	335
	HP	*100*	*185*	*180*	*270*	*340*	*450*
415 V	**kW**	80	100	140	220	280	375
	HP	*110*	*136*	*180*	*300*	*380*	*500*
440 V	**kW**	80	100	140	250	295	400
	HP	*110*	*136*	*190*	*340*	*400*	*545*
500 V	**kW**	90	110	160	257	355	400
	HP	*125*	*150*	*220*	*350*	*480*	*545*
660/690 V	**kW**	100	110	160	280	335	450
	HP	–	–	–	–	–	*610*
1000 V	**kW**	65	100	147	185	335	450
	HP	–	*136*	*200*	*250*	–	*610*

Maximum operating rate in operating cycles/hour, at rated operational power with an on-load factor = 85 %: 750 for CR1F150 to F265, 500 for CR1F400 to F630.

References:
pages B10/5, B10/16 to B10/20

Dimensions:
pages B10/58 to B10/61

Characteristics - Durability (AC)

Use in category AC-3 (Ue ≤ 440 V) (1) (θ ≤ 55 °C)

The current (Ic) in AC-3 is equal to the rated operational current (Ie) drawn by the motor.

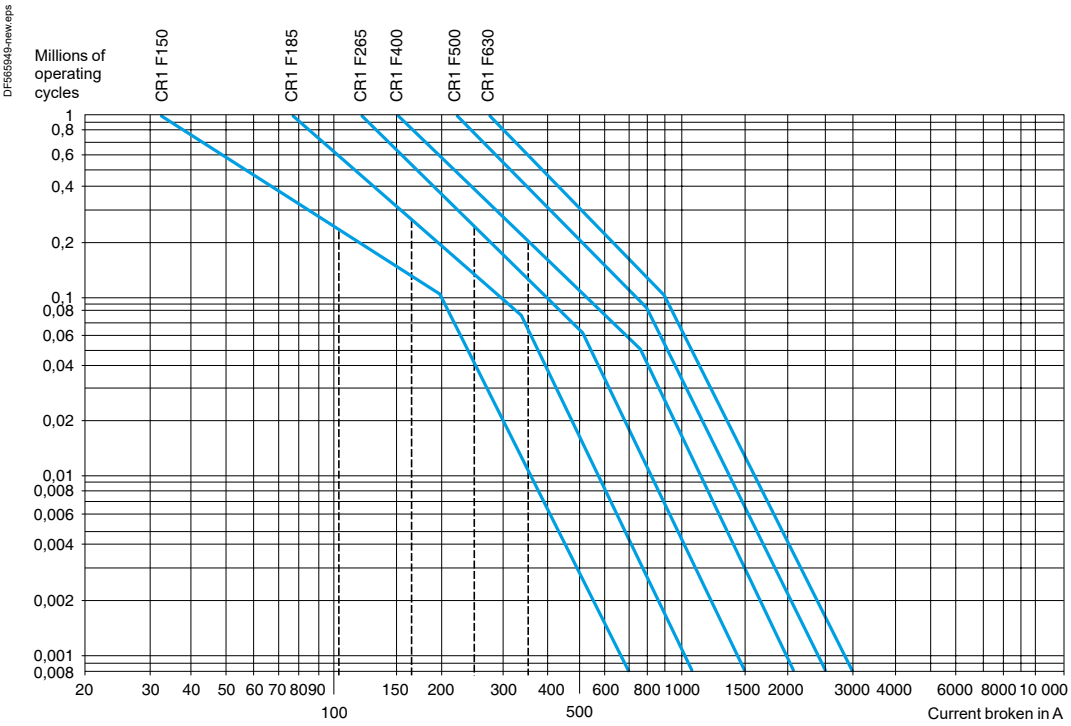

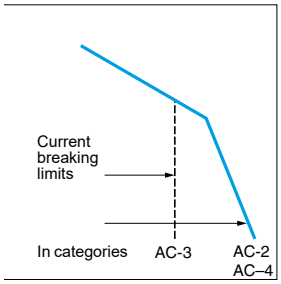

Example:
Asynchronous motor with P = 50 kW, Ue = 380 V, Ie = 100 A, Ic = Ie = 100 A, or asynchronous motor with P = 55 kW, Ue = 415 V, Ie = 100 A, Ic = Ie = 100 A.
600000 operating cycles required.
The above selection curves show the contactor rating needed, CR1F185.

(1) For 660 V, multiply the number of operating cycles by 0.8.

References:
pages B10/5, B10/16 to B10/20
Dimensions:
pages B10/58 to B10/61

Characteristics - Durability (AC)

Maximum operational current (on-load factor ⩾ 0.95)

Maximum operating rate: 120 operating cycles/hour

Contactor size			CR1 F150	CR1 F185	CR1 F265	CR1 F400	CR1 F500	CR1 F630
Cable c.s.a.		mm²	120	150	185	–	–	–
Number of bars			–	–	–	2	2	2
Bar c.s.a.		mm	–	–	–	30 x 5	40 x 5	60 x 5
Operational current in category AC-1 at ambient temperature	⩽ 40 °C	A	250	275	350	500	700	1000
	⩽ 55 °C	A	250	275	300	430	580	850
	⩽ 70 °C	A	170	180	250	340	500	700

Increase in operational current by parallel connection of poles

Apply the following coefficients to the above currents; these coefficients take into account an often unbalanced distribution of current between the poles:

- 2 poles in parallel: K = 1.6
- 3 poles in parallel: K = 2.25
- 4 poles in parallel: K = 2.8.

Electrical durability (Ue ⩽ 440 V) (1)

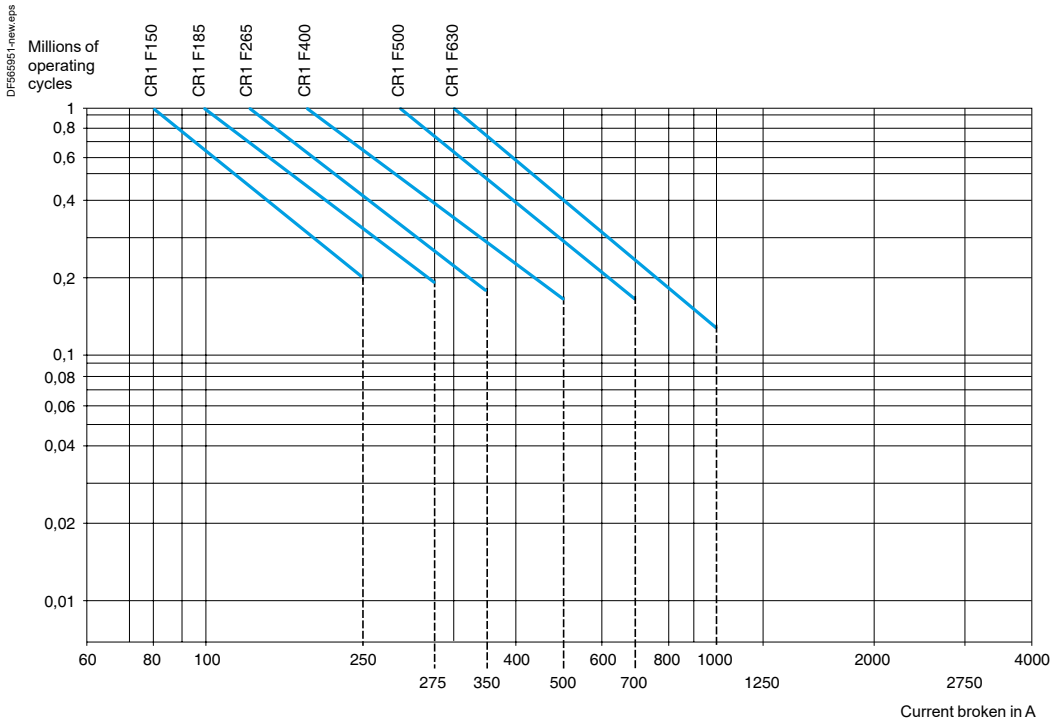

Example:
Ue = 220 V - Ie = 200 A - θ = 40 °C - Ic = Ie = 200 A
600000 operating cycles required.
The above selection curves show the contactor rating needed, CR1F400.

(1) For 660 V, multiply the number of operating cycles by 0.8.

Ref.
High power contactors

References:
pages B10/5, B10/16 to B10/20
Dimensions:
pages B10/58 to B10/61

3-phase transformer primaries switching

Operating conditions

Maximum ambient temperature: 55 °C.
Maximum operational voltage: 1000 V, 50…60 Hz.

When a transformer is switched on, there is generally an initial current surge which reaches its peak value almost instantaneously and then decreases in a largely exponential manner to quickly reach its steady state value.

The value of this current depends on:
■ the characteristics of the magnetic circuit and of the windings (cross sectional area of the core, rated inductance, number of turns, size of the windings, ...)
■ the performance of the magnetic laminations used (residual induction and saturation inductance),
■ the magnetic state of the circuit and the instantaneous value of the a.c. mains voltage at the moment of switch-on.

The peak current at the moment of switch-on can reach 20 to 40 times the rated current for the various kVA power ratings in the tables below. This value is independent of the “no-load” or “on-load” state of the transformer.

The peak magnetising current of the transformer must be lower than the values given in the tables below.

Contactor selection

Maximum operating rate: 120 operating cycles/hour

Contactor size			CR1 F150	CR1 F185	CR1 F265	CR1 F400	CR1 F500	CR1 F630
Maximum permissible current peak at switch-on		A	1700	2800	3500	5500	6800	9000
Maximum operational power (1)	220…230 V	kVA	25	40	50	75	100	140
	380…400 V	kVA	50	75	90	130	170	225
	415…440 V	kVA	55	80	100	140	190	250
	500 V	kVA	65	95	110	170	225	280
	660 V	kVA	80	120	140	200	270	315
	1000 V	kVA	100	150	200	250	375	470

(1) Maximum operational power corresponding to a current peak at switch-on of 30 In.

References:
pages B10/5, B10/16 to B10/20
Dimensions:
pages B10/58 to B10/61

Characteristics

Environment

Contactor type			CR1F150	CR1F185	CR1F265
Rated insulation voltage (Ui)	Conforming to IEC 60947-4-1	V	1000	1000	1000
Rated impulse withstand voltage (Uimp)	Coil not connected to the power circuit	kV	8		
Conforming to standards			IEC/EN 60947-1, IEC/EN 60947-4-1, JIS C8201-4-1, UL 60947-4-1, CSA C22.2 No. 60947-4-1		
Product certifications			CB scheme, UL, CSA, EAC, CE marking, UKCA marking		
Ambient air temperature around the device	Storage	°C	-60…+80		
	For operation at Uc	°C	-15…+70		
Maximum operating altitude	Without derating	m	3000		
Operating positions	Without derating		±5 ° in relation to normal vertical mounting plane		

Pole characteristics

Number of poles			3	3	3
Rated operational current (Ie) (Ue ≤ 440 V)	In AC-3, θ ≤ 40 °C	A	150	185	265
	In AC-1, θ ≤ 40 °C	A	250	275	350
	In AC-4, θ ≤ 40 °C	A	138	170	245
Rated operational voltage (Ue)	Up to	V	1000	1000	1000
Frequency limits (sine wave)	Of the operational current	Hz	25…200	25…200	25…200
Rated making capacity	I rms	A	1700	2100	2940
Rated breaking capacity	I rms 220…440 V	A	1500	1800	2450
	500 V	A	1200	1600	2200
	660/690 V	A	1100	1200	1700
	1000 V	A	450	600	800
Permissible short time rating from cold state, with no current flowing for previous 60 minutes at θ ≤ 40 °C	For 1 s	A	1200	1500	2200
	For 5 s	A	1200	1500	2200
	For 10 s	A	1200	1500	2200
	For 30 s	A	700	920	1230
	For 1 min	A	600	740	950
	For 3 min	A	450	500	620
	For 10 min	A	350	400	480
Short-circuit protection by fuses θ ≤ 440 V	Motor circuit AC-3 (type aM)	A	160	200	315
	AC-1 circuit (type gG, BS 88)	A	250	315	400
Average impedance per pole	At Ith and 50 Hz	mΩ	0.45	0.36	0.32
Power dissipated per pole for the above operational currents	AC-3	W	6	12	22
	AC-1	W	18	26	39
Connection	Number of conductors		1	1	1
	Cable with lugs	mm²	120	150	240
	Cable with connector	mm²	120	150	240
	Number of bars		2	2	2
	Bar c.s.a.	mm	25 x 3	25 x 3	32 x 4
	Bolt diameter		Ø8	Ø8	Ø10
	Tightening torque	N.m	18	18	35

References:
pages B10/5, B10/16 to B10/20
Dimensions:
pages B10/58 to B10/61

Characteristics

CR1F400	**CR1F500**	**CR1F630**
1000	1000	1000
8		
IEC/EN 60947-1, IEC/EN 60947-4-1, JIS C8201-4-1, UL 60947-4-1, CSA C22.2 No. 60947-4-1		
CB scheme, UL, CSA, EAC, CE marking, UKCA marking		
-60…+80		
-15…+70		
3000		
±5 ° in relation to normal vertical mounting plane		

3	3	3
400	500	630
500	700	1000
370	460	560
1000	1000	1000
25…200	25…200	25…200
4500	5000	6740
4000	5000	6300
3500	4500	5400
3000	3560	4600
1200	2500	3200
3600	4200	5050
3600	4200	5050
3600	4200	5050
2400	3200	4400
1700	2400	3400
1200	1500	2200
1000	1200	1600
400	500	630
500	800	1000
0.28	0.18	0.12
45	45	48
70	88	120
2	2	–
150	240	–
–	–	–
2	2	2
30 x 5	40 x 5	60 x 5
Ø10	Ø10	Ø12
35	35	58

(1) Paralleling of poles must be carried out only in accordance with the fuse manufacturer's recommendations.

Characteristics

a.c. and d.c. control circuit characteristics

Contactor type					CR1F150	CR1F185	CR1F265
Rated control circuit voltage (Uc)		∿ 50 or 60 Hz		V	48…415		
		∿ 400 Hz		V	48…220		
		⎓		V	48…220		
		⎓ low consumption		V	48…220		
Control voltage limits ∿ and ⎓		Latching			0.85…1.1 Uc		
		Unlatching			0.85…1.1 Uc		
Maximum operating rate at ambient temperature ≤ 40 °C		In operating cycles per hour			120		
Mechanical durability		In millions of operating cycles			1		
Average consumption	50/60 Hz	Latching	3-pole	VA	1100	1600	1650
		Unlatching	3-pole	VA	7.3	8	9
	400 Hz and ⎓	Latching	3-pole	VA	1260	1750	1800
		Unlatching	3-pole	VA	10	11	12
	⎓ low consumption	Latching	3-pole	W	500	500	500
		Unlatching	3-pole	W	15	20	40
Average operating time at Uc (1)		Latching		ms	35…40	35…40	45…50
		Unlatching		ms	50…100	50…100	50…100

(1) The closing time is measured from the moment the closing coil is energised to initial contact of the main poles. The opening time is measured from the moment the opening coil is energised to the moment the main poles separate.

***Note:** the arcing time depends on the circuit switched by the main poles. For 3-phase applications the arcing time is usually less than 10 ms. The load is isolated from the supply after a time equal to the sum of the opening time and the arcing time.*

Auxiliary contact characteristics

Type of contacts			LADN for contactors CR1F
Conventional thermal current		A	10
Rated insulation voltage (Ui)	Conforming to IEC 60947-5-1	V	690
Connection	Flexible or solid conductor with or without cable end	mm²	1 x 1 min; 2 x 2.5 max

Operational power of contacts LADN for contactors CR1F

a.c. supply

Electrical durability (valid for up to 3600 operating cycles/hour) on an inductive load such as the coil of an electromagnet: making current (cos φ 0.7) = 10 times the power broken (cos φ 0.4).

	V	48	115	230	400	600
1 million operating cycles	VA	120	280	560	960	1440
Occasional making capacity	VA	2600	7000	13 000	15 000	9000

d.c. supply

Electrical durability (valid for up to 1200 operating cycles/hour) on an inductive load such as the coil of an electromagnet, without economy resistor, the time constant increasing with the load.

	V	48	125	250	440
1 million operating cycles	W	90	75	68	61
Occasional making capacity	W	700	400	260	220

References:
pages B10/5, B10/16 to B10/20
Dimensions:
pages B10/58 to B10/61

Characteristics

CR1F400	CR1F500	CR1F630
48…415		
48…220		
48…220		
48…220		
0.85…1.1 Uc		
0.85…1.1 Uc		
120		
1		
1450	1650	2100
12	9.5	8
1600	1800	2300
16	13	11
500	550	620
70	60	45
40…75	40…80	40…80
50…100	50…100	50…100

(1) The closing time is measured from the moment the closing coil is energised to initial contact of the main poles. The opening time is measured from the moment the opening coil is energised to the moment the main poles separate.

Note: *the arcing time depends on the circuit switched by the main poles. For 3-phase applications the arcing time is usually less than 10 ms. The load is isolated from the supply after a time equal to the sum of the opening time and the arcing time.*

LADN for contactors CR1F
10
690
1 x 1 min; 2 x 2.5 max

Operational power of contacts ZC4GM for contactors CR1 B	a.c. supply Electrical durability (valid for up to 2400 operating cycles/hour) on an inductive load such as the coil of an electromagnet: making current (cos φ 0.7) = 10 times the power broken (cos φ 0.4).						d.c. supply Electrical durability (valid for up to 1200 operating cycles/hour) on an inductive load such as the coil of an electromagnet, without economy resistor, the time constant increasing with the load.				
	V	**110 127**	**220**	**380**	**415 440**	**500**	**V**	**110**	**120**	**440**	**500**
1 million operating cycles	**VA**	2000	4000	4000	4000	3500	**W**	250	250	230	200
Occasional making capacity	**VA**	14000	23000	35000	45000	35000	**W**	1600	800	400	360

Ref.
High power contactors

References:
pages B10/5, B10/16 to B10/20

Dimensions:
pages B10/58 to B10/61

Dimensions

CR1F150 to F500

Common side view

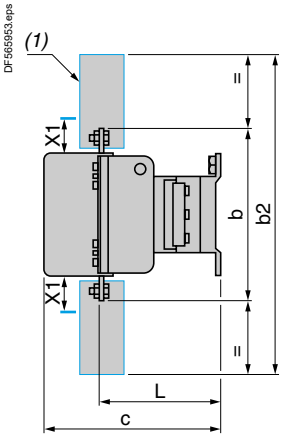

CR1F150, F185, F265

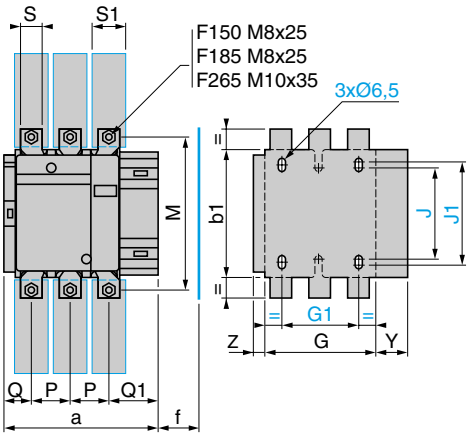

CR1F400, F500

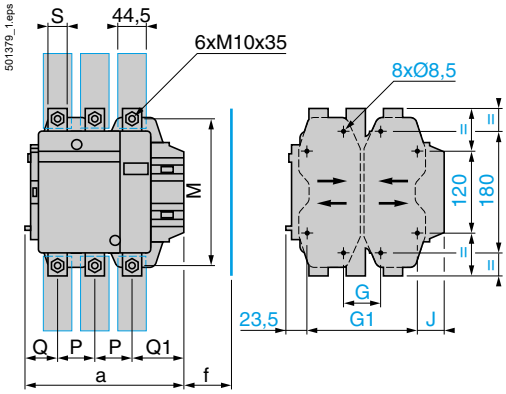

CR1	F150	F185	F265
a	163.5	168.5	201.5
b	170	174	203
b1	137	137	145
b2	301	305	370
c	171	181	213
f	131	130	147
G	106	111	142
G1	80	80	96
J	106	106	106
J1	120	120	120
L	107	113.5	141
M	150	154	178
P	40	40	48
Q	26	29	39
Q1	57.5	59.5	66.5
S	20	20	25
S1	27	34	38
Y	44	38.5	30.5
Z	13.5	13.5	15.5

f = minimum distance required for coil removal.

X1: Minimum electrical clearance according to operational voltage and breaking capacity.

Voltage in V	200…500	660…1000
CR1F150	10	15
CR1F185	10	15
CR1F265	10	15

CR1	F400	F500
a	213	233
G min.	66	66
b	206	238
b2	375	400
c	219	232
f	146	150
G supplied	80	80
G max.	102	120
G1 supplied	170	170
G1 min.	156	156
G1 max.	192	210
J	12	32
L	145	146
M	181	208
P	48	55
Q	43	47
Q1	74	77
S	25	30

f = minimum distance required for coil removal.

X1: Minimum electrical clearance according to operational voltage and breaking capacity.

Voltage in V	200…500	660…1000
CR1F400	15	20
CR1F500	15	20

(1) Power terminal protection shroud (see page B10/10).

CR1F630

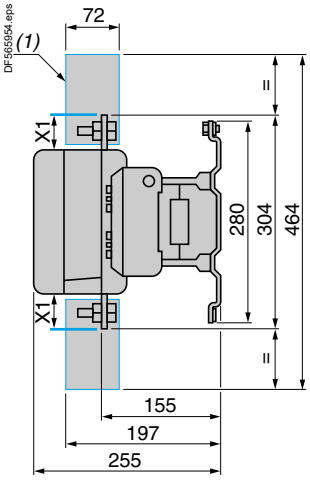

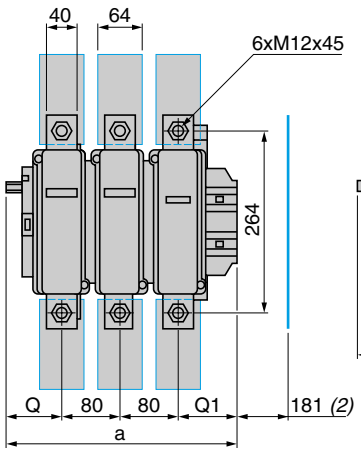

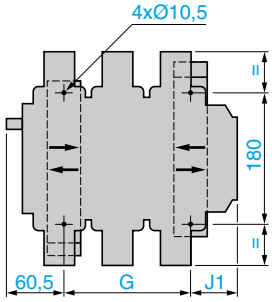

CR1F630	3P
a	309
G supplied	180
G min.	100
G max.	195
J1	61
Q	60
Q1	89

X1: Min. electrical clearance according to operational voltage and breaking capacity.

Voltage in V	X1
200…500	20
690…1000	30

(1) Power terminal protection shroud.
(2) Minimum distance required for coil removal.

References:
pages B10/5, B10/16 to B10/20

Characteristics:
pages B10/47 to B10/57

Life Is On Schneider Electric

Mounting

CR1F150...F265

Panel mounted

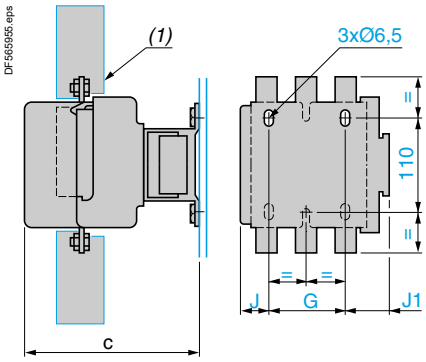

On pre-slotted mounting plate AM1PA, PB, PC

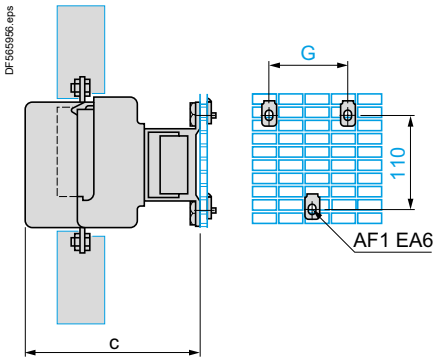

On rails DZ5MB on 120 mm centres

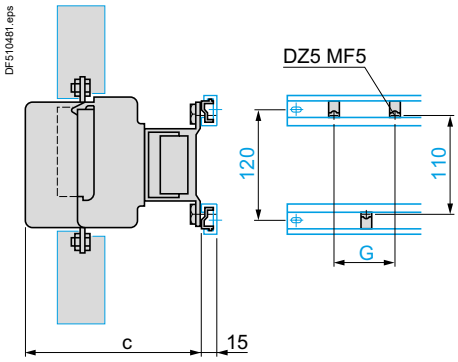

CR1		F150	F185	F265
c	3P	171	181	213
G	3P	80	80	96
J	3P	26.5	29	44.5
J1	3P	57	59.5	61.5

CR1		F150	F185	F265
c	3P	171	181	213
G	3P	80	80	96

CR1		F150	F185	F265
c	3P	171	181	213
G	3P	80	80	96

(1) Power terminal protection shroud (see page B10/10).

CR1F150...F650

On 2 notched uprights AM1EC●●●

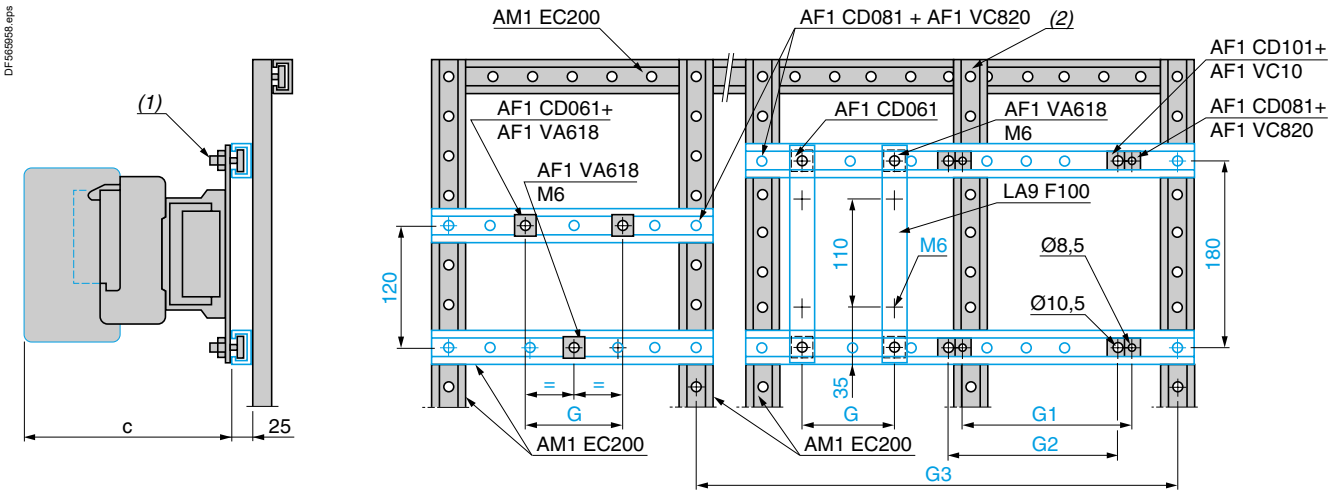

CR1		F150	F185	F265	F400	F500	F630
c	3P	171	181	213	213	226	250
G (M6)	3P	80	80	96	–	–	–
G1 (Ø8,5)	3P	–	–	–	80	80	–
G2 (Ø10,5)	3P	–	–	–	–	–	180

(1) AF1CD●●● or AF1VA●●●.
(2) This AM1EC200 upright is required when G2 or G3 is greater than 700 mm (please consult your Regional Sales Office).

Ref.
High power contactors

References:
pages B10/5, B10/16 to B10/20
Characteristics:
pages B10/47 to B10/57

Mounting

Reversing contactors 2 x CR1F150…F265

Horizontally mounted

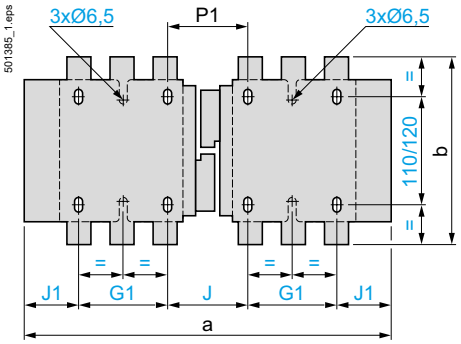

2 x **CR1**		**F150**	**F185**	**F265**
a	3P	345	357	425
b	3P	170	174	203
G1	3P	80	80	96
J	3P	71	78	109
J1	3P	57	59.5	61.5
P1	3P	71	78	100

Reversing contactors 2 x CR1F400…F630

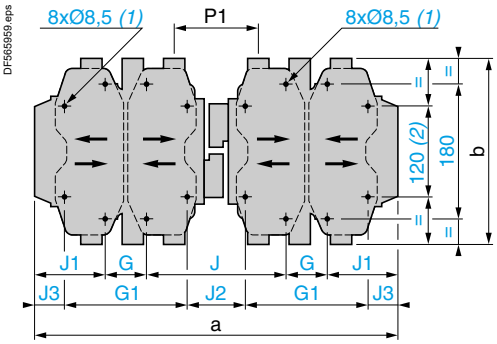

2 x **CR1**		**F400**	**F500**	**F630**
a	3P	446	485	636
b	3P	206	238	304
G	3P	80	80	180
G1	3P	170	170	–
J	3P	157	156	139
J1	3P	64.5	84.5	68.5
J2	3P	67	66	–
J3	3P	19.5	39.5	–
P1	3P	107	112	137

(1) Except F630: 4 x Ø 10.5.
(2) Except F630: 180.

Ref.

High power contactors

Mounting

Reversing contactors

Vertically mounted with mechanical interlock **LA9F●●●**.
2 contactors **CR1F** of identical or different ratings (CR1F150…F630), see page B10/49.

Assembly A

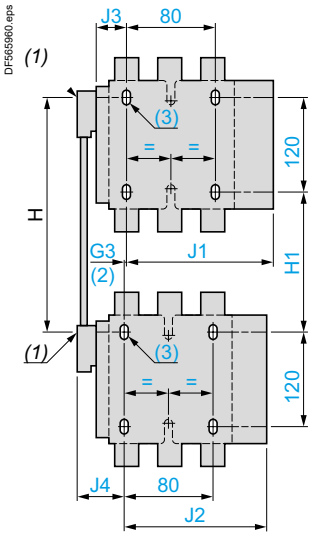

Assembly B

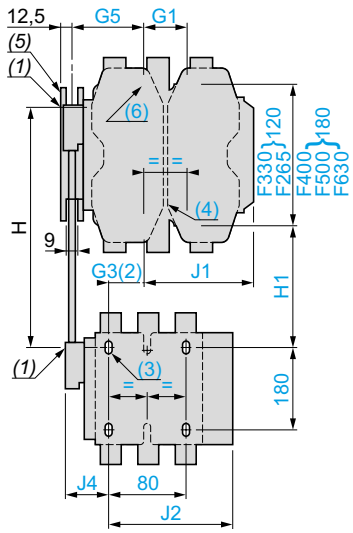

Assembly C

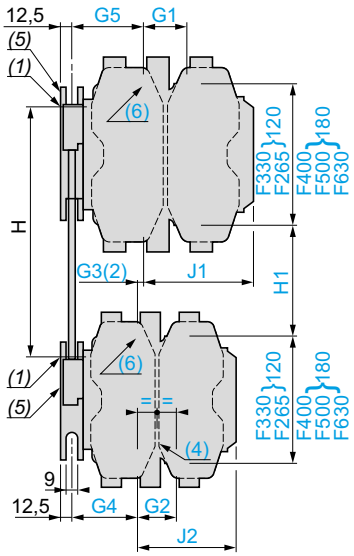

(1) Mechanical interlock shaft.
(2) For assembly of contactors of different ratings only.
(3) 3 x Ø6.5 mm for CR1F150…F265.
(4) 3 x Ø6.5 mm for CR1F265.
(5) Mechanical interlock guide bracket.
(6) 4 x Ø8.5 mm for CR1F400, F500 or 4 x Ø10.5 mm.

Assembly type		A			B								C									
LA9F		F4F	G4F	G4G	H4F	J4F	K4F	L4F	H4G	J4G	K4G	L4G	H4H	J4H	K4H	L4H	J4J	K4J	L4J	K4K	L4K	L4L
G1	3P	–	–	–	96	80	80	180	96	80	80	180	96	80	80	180	80	80	180	80	180	180
G2	3P	–	–	–	–	–	–	–	–	–	–	–	96	96	96	96	80	80	80	80	80	180
G3	3P	0	3	0	21	45	45	35	19	42	42	33	0	23	23	14	0	0	9 (7)	0	9 (7)	0
G4	3P	–	–	–	–	–	–	–	–	–	–	–	60	60	60	60	83	83	83	83	83	74
G5	3P	–	–	–	60	83	83	74	60	83	83	74	60	83	83	74	83	83	74	83	74	74
H	min.	200	210	220	240	250	270	310	250	250	270	310	250	260	280	330	260	280	325	300	345	380
	max.	310	300	310	380	380	380	380	380	380	380	380	380	380	380	380	380	380	380	380	380	380
H1	min.	80	90	100	110	80	100	140	120	90	110	150	130	110	130	170	60	100	140	120	160	200
	max.	190	180	190	250	210	210	210	250	220	220	220	260	230	230	220	200	200	195	200	195	200
J1	3P	133	134	134	149.5	137	157	241	149.5	137	157	241	149.5	137	157	24	137	157	241	157	244	241
J2	3P	133	133	134	183	133	183	133	134	134	134	134	142.5	149.5	149.5	149.5	137	137	137	157	157	241
J3	3P	48.5	53	53	–	–	–	–	–	–	–	–	–	–	–	–	–	–	–	–	–	–
J4	3P	48.5	54	53	48.5	48.5	48.5	48.5	53	53	53	53	–	–	–	–	–	–	–	–	–	–

(7) In this case, G4 is greater than G5.

Ref.
High power contactors

References:
pages B10/5, B10/16 to B10/20
Characteristics:
pages B10/47 to B10/57

TeSys Protect
LRK, Deca, Giga Overload relays

Type of product	Range		Pages
Thermal overload relays - For use with TeSys K contactors			
Adjustable thermal overload relays For motors TeSys LRK	From 0.16 to 16 A		B11/2
Adjustable thermal overload relays For unbalanced loads TeSys LRK	From 0.8 to 16 A		B11/3
Thermal overload relays Class 10 A - For use with TeSys Deca contactors			
TeSys Deca adjustable thermal overload relays For motors	From 0.16 to 140 A		B11/4
TeSys Deca adjustable thermal overload relays For unbalanced loads	From 0.16 to 140 A		B11/4
Thermal overload relays Class 20 - For use with TeSys Deca contactors			
TeSys Deca adjustable thermal overload relays For motors	From 0.63 to 80 A		B11/6
TeSys Deca adjustable thermal overload relays For unbalanced loads	From 0.63 to 32 A		B11/6
Electronic thermal overload relays - For use with TeSys Deca contactors			
TeSys Deca adjustable electronic overload relay, Multi-class, multi-scale	From 0.1 to 150 A		B11/10
Electronic overload relays - For use with TeSys Giga contactors			
TeSys LR9G electronic overload relays To protect against overload, phase imbalance, phase loss and ground fault	From 28 to 630 A		B11/11
Electronic over current relays - For machine protection			
Predefined or adjustable starting times, Manual reset	From 1.5 to 34 A		B11/15
Automatic, electric or manual reset	From 0.5 to 50 A		B11/15

PB123793.tif

LR2K0307

3-pole thermal overload relays for TeSys K contactors

These overload relays are designed for the protection of motors. They are compensated and phase failure sensitive. Resetting can either be manual or automatic.
Direct mounting: under the contactor for versions with screw clamp terminals only; pre-wired terminals, see pages B11/24 and B11/26.
Separate mounting: using terminal block LA7K0064 (see below).
On the front face of the overload relay:
- selection of reset mode: Manual (marked H) or Automatic (marked A),
- red pushbutton: Trip Test function,
- blue pushbutton: Stop and manual Reset,
- yellow trip flag indicator: overload relay tripped.

Protection by magnetic circuit breaker GV2LE, see pages coordination tables chapter A6.

Class 10A (the standard specifies a tripping time of between 2 and 10 seconds at 7.2 In)

Relay setting range	Fuses to be used with selected relay Maximum rating Type			Reference
	aM	gG	BS88	
A	A	A	A	
0.11…0.16	0.25	0.5	–	**LR2K0301**
0.16…0.23	0.25	0.5	–	**LR2K0302**
0.23…0.36	0.5	1	–	**LR2K0303**
0.36…0.54	1	1.6	–	**LR2K0304**
0.54…0.8	1	2	–	**LR2K0305**
0.8…1.2	2	4	6	**LR2K0306**
1.2…1.8	2	6	6	**LR2K0307**
1.8…2.6	4	8	10	**LR2K0308**
2.6…3.7	4	10	16	**LR2K0310**
3.7…5.5	6	16	16	**LR2K0312**
5.5…8	8	20	20	**LR2K0314**
8…11.5	10	25	20	**LR2K0316**
10…14	16	32	25	**LR2K0321**
12…16	20	40	32	**LR2K0322**

Overload relays for unbalanced loads

Class 10A: to order, replace the prefix **LR2** by **LR7** in the references selected from above (only applicable to overload relays **LR2K0305** to **LR2K0322**).
Example: **LR7K0308**.

Characteristics:
pages B11/24 and B11/25
Dimensions:
page B11/26
Schemes:
page B11/26

Product references

LA7K0064

Accessory for TeSys LRK Thermal overload relay		
Description	**Type of connection**	**Reference**
Terminal block for separate clip-on mounting of the overload relay on 35 mm din rail	Screw clamp	**LA7K0064**

3-pole differential thermal overload relays for Deca contactors - Class 10A

- for use with fuses or magnetic circuit breakers ref. GV2L and GV3L
- compensated relays with manual or automatic reset
- with relay trip indicator
- for a.c. or d.c.

PB121694.tif

LRD●●

Relay setting range (A)	Fuses to be used with selected relay aM (A)	gG (A)	BS88 (A)	For use with contactor LC1	Reference	Weight kg
Class 10A (1) for connection by screw clamp terminals or connectors						
0.10…0.16	0.25	2	–	D09…D38	**LRD01**	0.124
0.16…0.25	0.5	2	–	D09…D38	**LRD02**	0.124
0.25…0.40	1	2	–	D09…D38	**LRD03**	0.124
0.40…0.63	1	2	–	D09…D38	**LRD04**	0.124
0.63…1	2	4	–	D09…D38	**LRD05**	0.124
1…1.6	2	4	6	D09…D38	**LRD06**	0.124
1.6…2.5	4	6	10	D09…D38	**LRD07**	0.124
2.5…4	6	10	16	D09…D38	**LRD08**	0.124
4…6	8	16	16	D09…D38	**LRD10**	0.124
5.5…8	12	20	20	D09…D38	**LRD12**	0.124
7…10	12	20	20	D09…D38	**LRD14**	0.124
9…13	16	25	25	D12…D38	**LRD16**	0.124
12…18	20	35	32	D18…D38	**LRD21**	0.124
16…24	25	50	50	D25…D38	**LRD22**	0.124
23…32	40	63	63	D25…D38	**LRD32**	0.124
30…38	40	80	80	D32 and D38	**LRD35**	0.124
Class 10A (1) for connection by EverLink® BTR screw connectors (2)						
9…13	16	25	25	D40A…D65A	**LRD313**	0.375
12…18	20	32	35	D40A…D65A	**LRD318**	0.375
17…25	25	50	50	D40A…D65A	**LRD325**	0.375
23…32	40	63	63	D40A…D65A	**LRD332**	0.375
30…40	40	80	80	D40A…D65A	**LRD340**	0.375
37…50	63	100	100	D40A…D65A	**LRD350**	0.375
48…65	63	100	100	D50A and D65A	**LRD365**	0.375
62...80	80	125	125	D80A	**LRD380**	0.375
Class 10A (1) for connection by screw clamp terminals or connectors						
17…25	25	50	50	D80 and D95	**LRD3322**	0.510
23…32	40	63	63	D80 and D95	**LRD3353**	0.510
30…40	40	100	80	D80 and D95	**LRD3355**	0.510
37…50	63	100	100	D80 and D95	**LRD3357**	0.510
48…65	63	100	100	D80 and D95	**LRD3359**	0.510
55…70	80	125	125	D80 and D95	**LRD3361**	0.510
63…80	80	125	125	D80 and D95	**LRD3363**	0.510
80…104	100	160	160	D80 and D95	**LRD3365**	0.510
80…104	125	200	160	D115 and D150	**LRD4365**	0.900
95…120	125	200	200	D115 and D150	**LRD4367**	0.900
110…140	160	250	200	D150	**LRD4369**	0.900
80…104	100	160	160	(3)	**LRD33656**	1.000
95…120	125	200	200	(3)	**LRD33676**	1.000
110…140	160	250	200	(3)	**LRD33696**	1.000

PB123837.tif

LRD33●●

PB123839.eps

LRD43●●

PB123840.eps

LRD3●●6

Class 10A (1) for connection by lugs

Select the appropriate overload relay with screw clamp terminals or connectors from the table above and add one of the following suffixes:

- figure **6** for relays LRD01 to LRD35 and relays LRD313 to LRD380.
- **A66** for relays LRD3322 to LRD3363.

Relays LRD43●● are suitable, as standard, for use with lug-clamps.

Thermal overload relays for use with unbalanced loads

Class 10A (1) for connection by screw clamp terminals or lugs

In the references selected above, change the prefix **LRD** (except **LRD43●●**) to **LR3D**.
Example: **LRD02** becomes **LR3D02**.
Example with **Ever**Link®connectors: **LRD340** becomes **LR3D340**.
Example with lugs: **LRD3806** becomes **LR3D3806.**

(1) Standard IEC 60947-4-1 specifies a tripping time for 7.2 times the setting current I_R: class 10A: between 2 and 10 seconds.
(2) BTR screws: hexagon socket head. Requires the use of an insulated Allen key, in compliance with local wiring regulations.
(3) Independent mounting of the contactor.

Please check the availability of your variant in the index page B11/16. The SEARCH function of your viewer can be used.

Characteristics: pages B11/27 to B11/30
Dimensions: pages B11/31 to B11/33
Schemes: page B11/33

LRD●●3

3-pole differential thermal overload relays for Deca contactors - Class 10A

- for use with fuses or magnetic circuit breakers ref. GV2L and GV3L
- compensated relays with manual or automatic reset
- with relay trip indicator
- for a.c. or d.c.

Relay setting range (A)	Fuses to be used with selected relay			For use with contactor LC1	Reference
	aM (A)	gG (A)	BS88 (A)		
Classes 10A (1) for connection by spring terminals (only for direct mounting beneath the contactor)					
1…1.6	2	4	6	D09…D38	**LRD063**
1.6…2.5	4	6	10	D09…D38	**LRD073**
2.5…4	6	10	16	D09…D38	**LRD083**
4…6	8	16	16	D09…D38	**LRD103**
5.5…8	12	20	20	D09…D38	**LRD123**
7…10	12	20	20	D09…D38	**LRD143**
9…13	16	25	25	D12…D38	**LRD163**
12…18	20	35	32	D18…D38	**LRD213**
16…24	25	50	50	D25…D38	**LRD223**
Class 10A with connection by EverLink® BTR screw connectors (2) and control by spring terminals					
23…32	40	63	63	D40A…D65A	**LRD3323**
37…50	63	100	100	D40A…D65A	**LRD3503**
48…65	63	100	100	D50A and D65A	**LRD3653**
62...80	80	125	125	D80A	**LRD3803**

Thermal overload relays for use with unbalanced loads

Classes 10A (1) for connection by BTR screw connectors (2) and control by spring terminals

In the references selected above, replace **LRD3** with **LR3D3**.
Example: **LRD3803** becomes **LR3D3803**.

Thermal overload relays for use on 1000 V supplies

Classes 10A (1) for connection by screw clamp terminals

For relays LRD06 to LRD35 only, for an operating voltage of 1000 V, and only for independent mounting, the reference becomes **LRD33●●A66**.
Order an **LA7D3064** terminal block separately, see page B11/9.

Standard relay	Relay for 1000 V network
LRD32	LRD3353A66

(1) Standard IEC 60947-4-1 specifies a tripping time for 7.2 times the setting current I_R: class 10A: between 2 and 10 seconds.
(2) BTR screws: hexagon socket head. Requires the use of an insulated Allen key, in compliance with local wiring regulations.
Please check the availability of your variant in the index page B11/16. The SEARCH function of your viewer can be used.

Characteristics: pages B11/27 to B11/30
Dimensions: pages B11/31 to B11/33
Schemes: page B11/33

3-pole differential thermal overload relays for Deca contactors - Class 20

- for use with fuses or magnetic circuit breakers ref. GV2L and GV3L
- compensated relays with manual or automatic reset
- with relay trip indicator
- for a.c. or d.c.

LRD05L...LRD32L

Relay setting range (A)	Fuses to be used with selected relay aM (A)	gG (A)	BS88 (A)	For use with contactor LC1	Reference
Classes 20 (1) for connection by screw clamp terminals					
0.63...1	2	4	-	D09…D38	**LRD05L**
1...1.6	2	4	6	D09…D38	**LRD06L**
1.6...2.5	4	6	10	D09…D38	**LRD07L**
2.5...4	6	10	16	D09…D38	**LRD08L**
4...6	8	16	16	D09…D38	**LRD10L**
5.5...8	12	20	20	D09…D38	**LRD12L**
7...10	12	20	20	D09…D38	**LRD14L**
9...13	16	25	25	D12…D38	**LRD16L**
12...18	20	35	32	D18…D38	**LRD21L**
17...24	25	50	50	D25…D38	**LRD22L**
23...32	40	63	63	D25…D38	**LRD32L**
Class 20 (1) for connection by EverLink® BTR screw connectors (2)					
9…13	20	32	35	D40A…D65A	**LRD313L**
12…18	25	40	40	D40A…D65A	**LRD318L**
17…25	32	50	50	D40A…D65A	**LRD325L**
23…32	40	63	63	D40A…D65A	**LRD332L**
30…40	50	80	80	D40A…D65A	**LRD340L**
37…50	63	100	100	D40A…D65A	**LRD350L**
48…65	80	125	125	D50A and D65A	**LRD365L**

LR2D35●●

Classes 20 (1) for connection by screw clamp terminals					
17…25	32	50	50	D80 and D95	**LR2D3522**
23…32	40	63	63	D80 and D95	**LR2D3553**
30…40	40	100	80	D80 and D95	**LR2D3555**
37…50	63	100	100	D80 and D95	**LR2D3557**
48…65	80	125	100	D80 and D95	**LR2D3559**
55…70	100	125	125	D80 and D95	**LR2D3561**
63…80	100	160	125	D80 and D95	**LR2D3563**

Class 20 (1) for connection by lugs

For relays LRD05L to LRD32L and relays LRD313L to LRD365L, select the appropriate overload relay with screw clamp terminals or connectors from the table above and add the suffix **6**.
Example: **LRD05L** becomes **LRD05L6**.

Thermal overload relays for use with unbalanced loads

Class 20 (1) for connection by screw clamp terminals or lugs

For relays LRD05L to LRD32L and relays LR2D3522 to LR2D3563, select the appropriate overload relay with screw clamp terminals or connectors from the table above and change the prefix LRD or LR2D to **LR3D**.
Example: **LRD05L** becomes **LR3D05L**.

(1) Standard IEC 60947-4-1 specifies a tripping time for 7.2 times the setting current I_R:
class 20: between 6 and 20 seconds
(2) BTR screws: hexagon socket head. Requires the use of an insulated Allen key, in compliance with local wiring regulations.
Please check the availability of your variant in the index page B11/16. The SEARCH function of your viewer can be used.

Characteristics: pages B11/27 to B11/30
Dimensions: pages B11/31 to B11/33
Schemes: page B11/33

3-pole differential thermal overload relays for Deca contactors - Class 20

- for use with fuses or magnetic circuit breakers ref. GV2L and GV3L
- compensated relays with manual or automatic reset
- with relay trip indicator
- for a.c. or d.c.

Relay setting range (A)	Fuses to be used with selected relay			For mounting beneath contactor LC1	Reference
	aM (A)	gG (A)	BS88 (A)		
Class 20 (1) with connection by EverLink® BTR screw connectors (2) and control by spring terminals					
9…13	20	32	35	D40A…D65A	**LRD313L3**

(1) Standard IEC 60947-4-1 specifies a tripping time for 7.2 times the setting current I_R:
class 10: between 4 and 10 seconds,
class 10A: between 2 and 10 seconds,
class 20: between 6 and 20 seconds.
(2) BTR screws: hexagon socket head. Requires the use of an insulated Allen key, in compliance with local wiring regulations.

Characteristics:
pages B11/27 to B11/30,
pages B11/34 to B11/37

Dimensions:
pages B11/31 to B11/33
and B11/38

Schemes:
pages B11/33 and B11/39

DB439338.eps

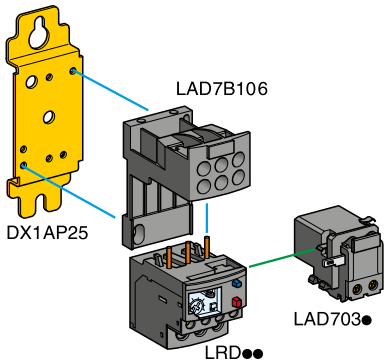

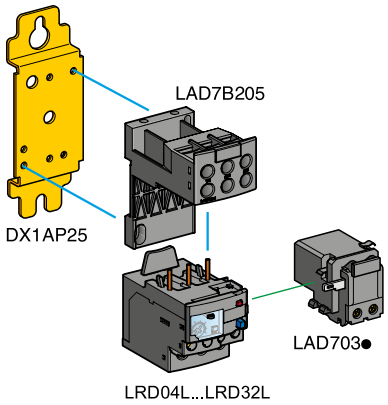

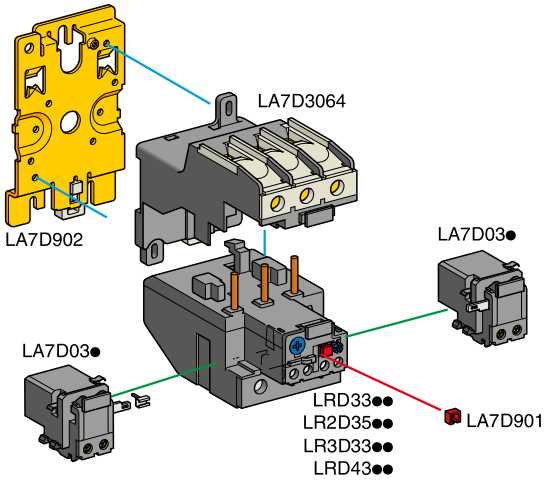

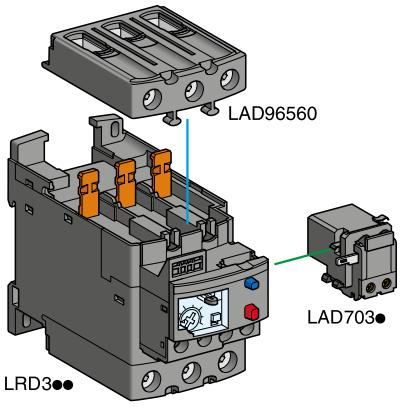

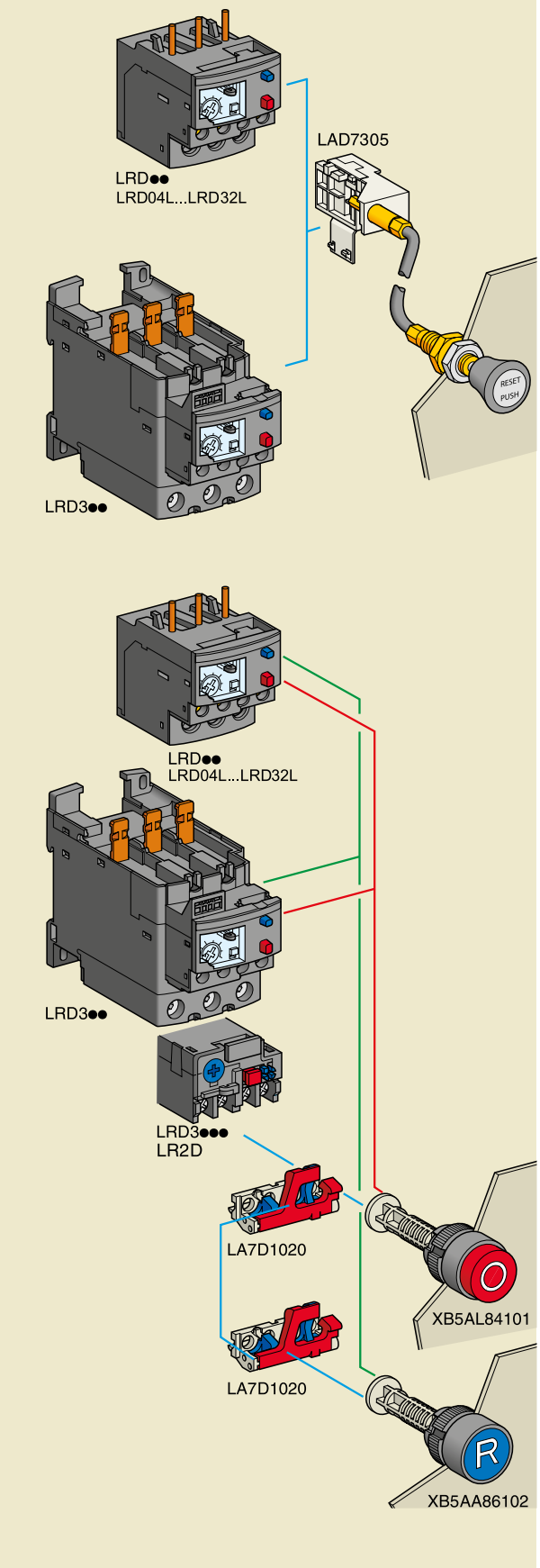

Overload relays

Life Is On Schneider Electric

Product references

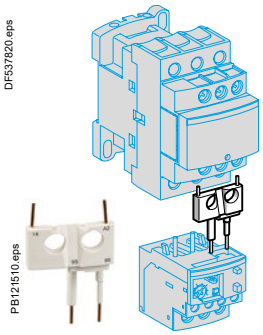

LAD7C●

Separate components for relays

Description	For use with	Sold in lots of	Unit reference
Pre-wiring kit allowing direct connection of the N/C contact of relay LRD01…35 or LR3D02…D35 to the contactor	LC1D09…D18	10	**LAD7C1** (1)
	LC1D25…D38	10	**LAD7C2** (1)
Terminal block (2) for clip-on mounting on 35 mm DIN Rail or screw fixing; for fixing centres, see pages B11/31 to B11/33	LRD01…35 and LR3D02…D35	1	**LAD7B106**
	LRD05L...LRD32L, LR3D05L...LR3D32L	1	**LAD7B205**
	LRD33●●, LR3D33●●, LR2D35●●, LR3D35●●	1	**LA7D3064** (3)
EverLink® terminal block for independent mounting	LRD3●●, LRD3●●L and LR3D3●●	1	**LAD96560**
Size 4 Allen key, insulated, 1000 V	LRD3●●, LRD3●●L and LR3D3●●	5	**LADALLEN4**
Terminal block adapter for mounting a relay beneath an LC1D115 or D150 contactor	LRD33●●, LR3D33●●, LRD35●●	1	**LA7D3058** (3)
Mounting plates (4) for screw fixing on 110 mm centres	LRD01…35, LR3D02…D35, LRD05L... LRD32L, LR3D05L...LR3D32L	10	**DX1AP25**
	LRD3●●●, LR3D3●●●, LR2D35●●	1	**LA7D902**
Marker holders, snap-in 8 x 18 mm	LRD3●●	100	**LAD90**
	All relays except LRD01…35, LRD05L...32L, LR3D05L...D32L LR3D02…D35, LRD3●●, LRD3●●L and LR3D3●●	100	**LA7D903**
Bag of 400 blank legends (self-adhesive, 7 x 16 mm)	All relays	1	**LA9D91**
Remote Stop or electrical reset device (5)	LRD01…35, LR3D02…D35, LRD05L...32L, LR3D05L...D32L and LRD313…LRD380	1	**LAD703●** (6)
Remote tripping or electrical reset device (5)	All relays except LRD01…35, LR9D01...32, LRD05L...32L, LR3D05L...D32L, LR3D02…D35, LR9D01...32, LRD3●●, LRD3●●L and LR3D3●●	1	**LA7D03●** (6)
Block of insulated terminals	LR9D	2	**LA9F103** (7)
IP 20 cover for lug type terminals for independent mounting	LRD3256…3806	1	**LAD96570**
IP 20 cover for lug type terminals for mounting with contactor LC1D40A6…D65A6	LRD3256…3806	1	**LAD96575**
Terminal block for lug type terminals for independent mounting	LRD3256…3806	1	**LAD96566**

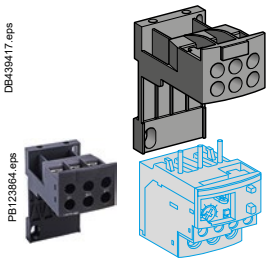

LAD7B106

Remote control

"Reset" function

Description	For use with	Sold in lots of	Unit reference
By flexible cable (length = 0.5 m)	LRD01…35, LR3D02…D35, LR3D05L...D32L and LRD313…LRD380, LRD05L...LRD32L	1	**LAD7305** (8)
	All relays except LRD01...35, LR3D02...D35, LRD3●●, LRD05L...32L, LR3D05L...D32L, LRD3●●L, LR3D3●●, LR9D01	1	**LA7D305**

"Stop" and/or "Reset" functions

The terminal protection shroud must be removed and the following 3 products must be ordered separately:

Adapter for door mounting	LRD33●●, LR2D		1	**LA7D1020**
Operating heads for spring return pushbutton	Stop	All relays	1	**XB5AL84101**
	Reset	All relays	1	**XB5AA86102**

(1) These pre-wiring kits cannot be used with reversing contactors.
(2) Terminal blocks are supplied with terminals protected against direct finger contact and screws in the open, "ready-to-tighten" position.
*(3) To order a terminal block for connection by lugs, the reference becomes **LA7D30646**.*
(4) Remember to order the terminal block corresponding to the type of relay.
*(5) The time for which the coil of remote tripping or electrical resetting device **LA7D03** or **LAD703** can remain energised depends on its rest time: 1 s pulse duration with 59 s rest time; 2 s pulse duration with 118 s rest time; maximum 20 s pulse duration with 1180 s rest time. Minimum pulse time: 200 ms.*
(6) Reference to be completed by adding the code indicating the control circuit voltage.
Standard control circuit voltages (for other voltages, please consult your Regional Sales Office):

Volts	12	24	48	96	110	220/230	380/400	415/440
50/60 Hz	–	B	E	–	F	M	Q	N
Consumption, inrush and sealed: < 100 VA								
⎓	J	B	E	DD	F	M	–	–
Consumption, inrush and sealed: < 100 W.								

(7) Only one terminal block can be mounted below LR9D.
(8) Not compatible with 3-pole relays fitted with spring terminals.

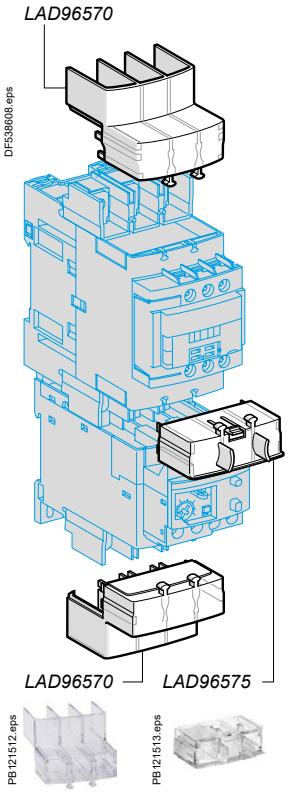

PB114690.eps

LR9D0● and LR9D32

PB108399.eps

LR9D5567

PB121746.eps

LAD7B205

PB121747.eps

LAD7B205 mounted on LR9D01

PB114693.eps

LR9D67

Electronic thermal overload relays for Deca contactors

- for use with fuses or magnetic circuit breakers
- compensated relays, with relay trip indicator,
- for a.c.,
- for direct mounting on contactor or independent mounting [(1)].

Relay setting range	Fuses to be used with selected relay		For direct mounting beneath contactor LC1	Reference
	aM	gG		
A	A	A		
Classes 5.10.20.30 [(1)] selectable for direct connection on Deca contactors or connection using connectors				
0.1...0.5			D09…D38	**LR9D01**
0.4...2			D09…D38	**LR9D02**
1.6…8			D09…D38	**LR9D08**
6.4…32			D09…D38	**LR9D32**
Classes 10 or 10 A [(1)] for connection using bars or connectors				
60…100	100	160	D115…D150	**LR9D5367**
90…150	160	250	D115…D150	**LR9D5369**
Classes 20 [(1)] for connection using bars or connectors				
60…100	125	160	D115…D150	**LR9D5567**
90…150	200	250	D115…D150	**LR9D5569**

Separate components for relays

Description	For use with	Sold in lots of	Unit reference
Terminal block [(2)] For clips-on mounting on 35 mm rails (AM1DP200) or screws fixing; for fixing centres, see pages B11/35 to B11/37	LR9D01, LR9D02, LR9D08, LR9D32	1	**LAD7B205**

Electronic overload relays for balanced or unbalanced loads

Relay setting range	Fuses to be used with selected relay		For direct mounting beneath contactor LC1	Reference
	aM	gG		
A	A	A		
Classes 10 or 20 [(1)] selectable for direct connection using bars or connectors				
60…100	100	160	D115…D150	**LR9D67**
90…150	160	250	D115…D150	**LR9D69**

(1) Standard IEC 60947-4-1 specifies a tripping time for 7.2 times the setting current I_R:
class 5: between 0.5 and 5 seconds
class 10: between 4 and 10 seconds
class 10A: between 2 and 10 seconds
class 20: between 6 and 20 seconds
class 30: between 9 and 30 seconds.
(2) Terminal blocks are supplied with terminals protected against direct finger contact and screws in the open, "ready-to-tighten" position.

Characteristics: pages B11/34 to B11/37
Dimensions: page B11/38
Schemes: page B11/39

Life Is On Schneider Electric

Intelligent design for greater advantages

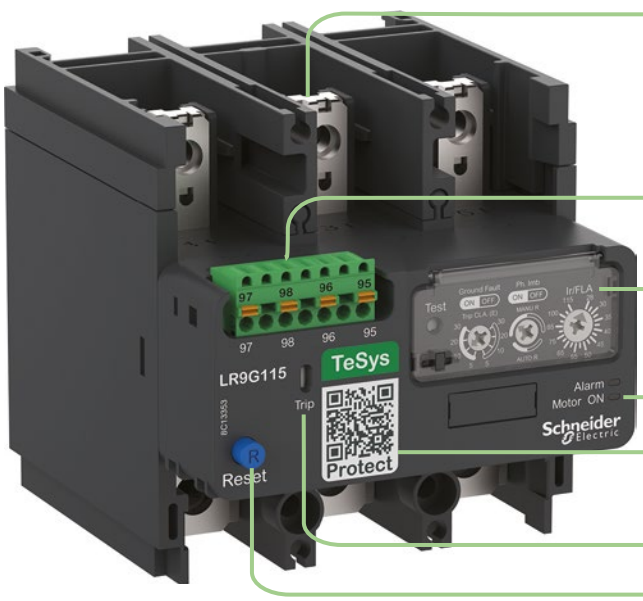

- Pole pitch aligned with TeSys Giga Contactor
- Push-in type control terminals
- Wide range of overload setting with trip class & ground fault protection
- Motor ON and trip Alarm indicators
- Unique QR code providing quick access to complete product data
- Relay trip indication
- Manual Reset button

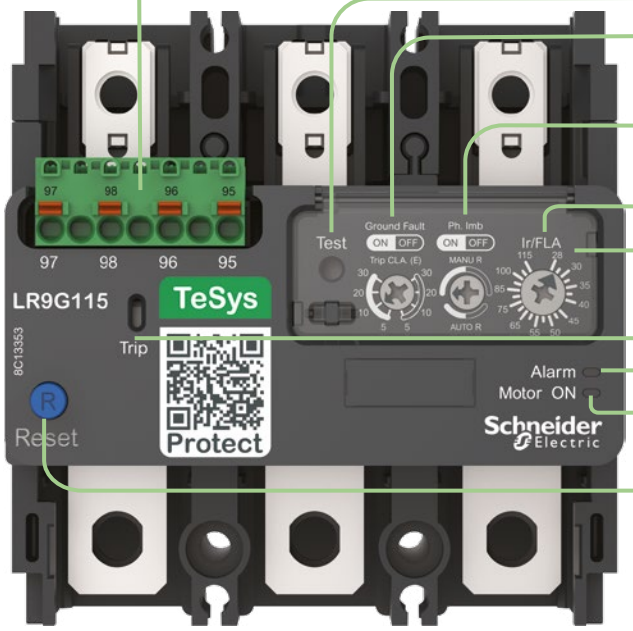

- 1 NO + 1 NC trip contacts with push-in type terminals
- Test button
- 5E…30E trip class selection with ground fault protection option
- Manual/auto reset selection with phase imbalance protection option
- Setting dial for current Ir
- Transparent cover with seal protection
- Trip indicator
- Trip alarm LED indication
- Motor ON LED indication
- Manual reset button

Perfect selection for your motor protection

Range
- A comprehensive range of TeSys Giga Electronic overload relays in 3 sizes
- Direct mounting of relay with contactors saving in panel space and installation time

28…115 A and 57…225 A

125…500 A

160...630 A

Overload relays
- Advanced electronic monitoring with high accuracy
- Thermal compensation for ambient temperatures up to 60 °C
- Wide range of current settings, 0.25...1 Ir setting
- Direct and separately mountable to manage panel design
- Pole pitch alignment with contactors, enabling direct mounting
- Push-in terminals for quick and easy control wiring options
- 4 references covering the complete range means less inventory
- Manual and auto reset to suit your needs
- Multiple reset options: Manual, Automatic & Remote
- Protection against phase loss
- Selectable protection against imbalanced load
- Selectable protection against ground fault
- ON status and overload alarm signaling by LED
- TRIP indicator

Certifications
- Multiple standards
- International certifications

Trip class
- Selectable, from class 5E to class 30E to suit different application needs

Product references – coding principle

LR9	G	630
Electronic overload relay	TeSys Giga series	**Protection settings** 115: 28…115 A 225: 57…225 A 500: 125…500 A 630: 160…630 A

PB121623_R.tif

LR9G225

PB121647.tif

Direct mounting with TeSys Giga Contactor

TeSys Giga Electronic overload relays

- Electronic overload relay
- Suitable for independent mounting or direct mounting with TeSys Giga contactors
- Ergonomic rotary switches for thermal and protection settings
- Trip class selection: 5E/10E/20E/30E
- Overload, phase imbalance, phase loss and ground fault protections
- Manual and auto reset options
- LED indicator for Motor ON and pre-trip alarm
- Thermal memory and compensation
- Push-in terminals for control connections

Relay setting range	Fuses to be used with selected relay		For direct mounting beneath contactor LC1G	Reference
	aM /gG/aR	kA		
A	A			
Class 5E...30E				
28…115	125 aM	100	LC1G115…225	**LR9G115**
57…225	250 aM	100	LC1G115…225	**LR9G225**
125…500	630 aM	100	LC1G265…500	**LR9G500**
	630 gG	80		
	630 aR	25		
160…630	800 aR	100	LC1G630	**LR9G630**
	800 aR	80		
	800 aR	25		

PB121632.eps

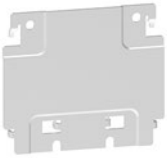

LA9G3650

LA9G82_ISO.eps

LA9G82

PB121626.eps

LA9G3704

Overload relay accessories

Mounting and wiring accessories

Description	Reference
Mounting base for alignment of LR9G115-225 with LC1G115-225 (2)	**LA9G3650**
Mounting base for alignment of LR9G500 with LC1G265-330 (2)	**LA9G3651**
Mounting base for alignment of LR9G500 with LC1G400-500 (2)	**LA9G3652**
Mounting base for alignment of LR9G630 with LC1G630-800 (2)	**LA9G3653**
Push-in connection adapter	**LA9G82**

Front protection cover

Description	Compatible with contactors	Quantity	Reference
Front protection cover (3)	LR9G115 / LR9G225	1	**LA9G3704**
	LR9G500	1	**LA9G3705**
	LR9G630	1	**LA9G3706**

(2) Used for independent mounting of Overload Relay beneath contactor to align main power pole connections.
(3) Used to cover main power connection terminals between contactor and overload with direct mounting option.

Introduction: pages B11/11 to B11/12
Characteristics: pages B11/40 to B11/42
Dimensions: page B11/43

Product references

LAD703●

Remote Reset control device

Description	Quantity	Reference
Remote electrical reset device [1]	1	**LAD703●** [2]
Remote Reset function control by flexible cable (length = 0.5 m)	1	**LAD7305**

(1) The time for which the coil of remote electrical reset device LAD703● can remain energised depends on its rest time: 1 s pulse duration with 9 s rest time; 5 s pulse duration with 30 s rest time; 10 s pulse duration with 90 s rest time. Maximum pulse duration of 20 s with rest time of 300 s. Minimum pulse time: 200 ms.
(2) Reference to be completed by adding the coil voltage code.

LAD7305

Standard control circuit voltages

Volts	24	110	220/230
∿ 50/60 Hz	B	F	M
Consumption, inrush and sealed: < 100 VA			
⎓	B	F	M
Consumption, inrush and sealed: < 100 W.			

Product references

PB111974.eps

LR97D07●●

LR97D electronic over current relays

Relay setting range	Usable range (1)	For use with contactor (2)	Relay supply voltage	Reference (3)
A	A			
0.3…1.5	**0.3…1.3**	LC1 D09…D38	∼ 200…240 V	**LR97D015M7**
			∼ 100…120 V	**LR97D015F7**
			⎓/∼ 24 V	**LR97D015B**
			⎓/∼ 48 V	**LR97D015E**
1.2…7	**1.2…6**	LC1 D09…D38	∼ 200…240 V	**LR97D07M7**
			∼ 100…120 V	**LR97D07F7**
			⎓/∼ 24 V	**LR97D07B**
			⎓/∼ 48 V	**LR97D07E**
5…25	**5…21**	LC1 D09…D38	∼ 200…240 V	**LR97D25M7**
			∼ 100…120 V	**LR97D25F7**
			⎓/∼ 24 V	**LR97D25B**
			⎓/∼ 48 V	**LR97D25E**
20…38	**20…34**	LC1 D25…D38	∼ 200…240 V	**LR97D38M7**
			∼ 100…120 V	**LR97D38F7**
			⎓/∼ 24 V	**LR97D38B**
			⎓/∼ 48 V	**LR97D38E**

PB111927.eps

LT4730●●●

LT47 electronic over current relays

Relay setting range	Usable range (1)	Relay supply voltage	Reference
A	A		
LT47 relay with manual/electric reset			
0.5…6	**0.5…5**	∼ 200…240 V	**LT4706M7S**
		∼ 100…120 V	**LT4706F7S**
		⎓/∼ 24 V	**LT4706BS**
3…30	**3…25**	∼ 200…240 V	**LT4730M7S**
		∼ 100…120 V	**LT4730F7S**
		⎓/∼ 24 V	**LT4730BS**
5…60	**5…50**	∼ 200…240 V	**LT4760M7S**
		∼ 100…120 V	**LT4760F7S**
		⎓/∼ 24 V	**LT4760BS**
		⎓/∼ 48 V	**LT4760ES**
LT47 relay with automatic reset			
0.5…6	**0.5…5**	∼ 200…240 V	**LT4706M7A**
		⎓/∼ 24 V	**LT4706BA**
3…30	**3…25**	∼ 200…240 V	**LT4730M7A**
		∼ 100…120 V	**LT4730F7A**
		⎓/∼ 24 V	**LT4730BA**
		⎓/∼ 48 V	**LT4730EA**
5…60	**5…50**	∼ 200…240 V	**LT4760M7A**
		⎓/∼ 24 V	**LT4760BA**

Accessories (to be ordered separately)

Description	For use with	Sold in lots of	Unit reference
Pre-wiring kits allowing connection of the LR97D relay N/C contact directly to the contactor	LC1 D09…D18	10	**LAD7C1**
	LC1 D25…D38	10	**LAD7C2**
Terminal block for clip-on mounting on 35 mm rail (AM1 DP200)	LR97D	1	**LAD7B106**

(1) To allow adjustment of the tripping sensitivity, see adjustment method (page B11/44).
(2) Please see chapter B8.
(3) If a pre-wiring kit is used, it is no longer possible to electrically wire signalling of tripped status.

Characteristics:
pages B11/44 to B11/47

Dimensions, schemes:
page B11/48

Product references

DPER01	LR3D076	LR97D015F7	LRD123	LRD356
DPER21	LR3D07L	LR97D015M7	LRD126	LRD365
DPER32	LR3D08	LR97D07B	LRD12L	LRD3653
DPER35	LR3D086	LR97D07E	LRD14	LRD3656
ER1XA2M	LR3D08L	LR97D07F7	LRD143	LRD365L
LA7D03B	LR3D10	LR97D07M7	LRD146	LRD365L6
LA7D03F	LR3D106	LR97D25B	LRD14L	LRD380
LA7D03M	LR3D10L	LR97D25E	LRD16	LRD3803
LA7D03Q	LR3D12	LR97D25F7	LRD163	LRD3806
LA7D1020	LR3D126	LR97D25M7	LRD166	LRD4365
LA7D1064	LR3D12L	LR97D38B	LRD16L	LRD4367
LA7D305	LR3D14	LR97D38E	LRD16L6	LRD4369
LA7D3058	LR3D146	LR97D38F7	LRD21	LRD488C
LA7D3064	LR3D14L	LR97D38M7	LRD213	LT4706BA
LA7D30646	LR3D16	LR9D5367	LRD216	LT4706BS
LA7D903	LR3D166	LR9D5369	LRD21L	LT4706F7S
LA7K0064	LR3D16L	LR9D5567	LRD21L6	LT4706M7A
LA9D730	LR3D21	LR9D5569	LRD22	LT4706M7S
LA9D91	LR3D216	LR9D67	LRD223	LT4730BA
LAD703B	LR3D21L	LR9D69	LRD226	LT4730BS
LAD703E	LR3D22	LR9G115	LRD22L	LT4730EA
LAD703F	LR3D226	LR9G225	LRD22L6	LT4730F7A
LAD703M	LR3D22L	LR9G500	LRD313	LT4730F7S
LAD703Q	LR3D313	LR9G630	LRD313L	LT4730M7A
LAD7305	LR3D318	LA9G3650	LRD318	LT4730M7S
LAD7B105	LR3D32	LA9G3651	LRD318L	LT4760BA
LAD7B1056	LR3D325	LA9G3652	LRD32	LT4760BS
LAD7B106	LR3D326	LA9G3653	LRD325	LT4760ES
LAD7B205	LR3D32L	LA9G82	LRD3256	LT4760F7S
LAD7C1	LR3D332	LA9G3704	LRD325L	LT4760M7A
LAD7C2	LR3D3322	LA9G3705	LRD326	LT4760M7S
LR2D3522	LR3D3353	LA9G3706	LRD32L	
LR2D3553	LR3D3355	LRD01	LRD32L6	
LR2D3555	LR3D3363	LRD02	LRD3312	
LR2D3557	LR3D3365	LRD03	LRD3314	
LR2D3559	LR3D340	LRD04	LRD332	
LR2D3561	LR3D35	LRD046	LRD3322	
LR2D3563	LR3D350	LRD04L6	LRD3323	
LR2K0301	LR3D3522	LRD05	LRD332L	
LR2K0302	LR3D3553	LRD056	LRD3353	
LR2K0303	LR3D3555	LRD05L	LRD3353A66	
LR2K0304	LR3D3557	LRD06	LRD3355	
LR2K0305	LR3D3559	LRD063	LRD3357	
LR2K0306	LR3D3561	LRD066	LRD3357A66	
LR2K0307	LR3D3563	LRD06L	LRD3359	
LR2K0308	LR3D365	LRD07	LRD3359A66	
LR2K0310	LR3D380	LRD073	LRD3361	
LR2K0312	LR3D3803	LRD076	LRD3363	
LR2K0314	LR3D3806	LRD07L	LRD3365	
LR2K0316	LR3D4365	LRD07L6	LRD33656	
LR2K0321	LR3D4367	LRD08	LRD33676	
LR2K0322	LR3D4369	LRD083	LRD33696	
LR3D02	LR7K0305	LRD086	LRD340	
LR3D03	LR7K0306	LRD08L	LRD3406	
LR3D04	LR7K0308	LRD08L6	LRD340L	
LR3D046	LR7K0310	LRD10	LRD340L6	
LR3D05	LR7K0312	LRD103	LRD35	
LR3D056	LR7K0314	LRD106	LRD350	
LR3D06	LR7K0316	LRD10L	LRD3503	
LR3D066	LR97D015B	LRD10L6	LRD3506	
LR3D07	LR97D015E	LRD12	LRD350L	

This document is current. Click on the product reference to get the most recent availability status (hyperlink to **se.com** product datasheet).
If your product variant is no longer available, please consult your distributor or regional sales office.

TeSys LRK, Deca Overload relays

Technical Data for Designers

Contents

Motor and machine protection ..... B11/18 to B11/23

TeSys LRK - thermal overload protection:
> characteristics ..... B11/24 to B11/25
> dimensions and schemes B11/26

Deca - thermal overload protection:
> characteristics ..... B11/27 to B11/30
> dimensions ..... B11/31 to B11/33
> schemes B11/33

Deca - electronic thermal overload protection:
> characteristics ..... B11/34 to B11/37
> dimensions B11/38
> schemes B11/39

Giga - electronic overload relays:
> characteristics ..... B11/40 to B11/42
> dimensions and diagram B11/43

LR97, LT47 - electronic over current relays:
> characteristics ..... B11/44 to B11/47
> dimensions and schemes B11/48

Introduction

Exceeding the operating limits of an electric motor will lead, eventually, not only to destruction of the motor itself but also of the mechanisms it drives.

This type of load can be the cause of electrical or mechanical faults.
■ Electrical faults:
□ overvoltage, voltage drop, imbalance and phase failure which cause variations in the current drawn,
□ short-circuits which can cause the current to reach levels capable of destroying the load.

■ Mechanical faults:
□ locked rotor,
□ brief or prolonged overload which leads to an increase in the current drawn by the motor, and therefore overheating.

The cost of these faults must take into account loss of production, loss of raw materials, repair of the production tool, poor quality of production and delays in delivery.

These faults can also have dramatic consequences on the safety of persons in direct or indirect contact with the motor.

To prevent these faults, protection measures are necessary. They make it possible to isolate the equipment to be protected from the mains supply by measuring variations in electrical values (voltage, current, etc.).

Each motor starter must therefore have:

■ **short-circuit protection**, to detect and break, as quickly as possible, abnormal currents generally greater than 10 times the rated current (In).

■ **overload protection**, to detect increases in current up to about 10 In and switch off the starter before overheating of the motor and conductors damages the insulation.

This protection is provided by specific devices such as fuses, circuit breakers and thermal overload relays, or by more integrated devices offering several types of protection.

Causes, effects and consequences of various faults

There are two types of fault:
- Internal faults within the motor
- External faults: these are located outside the electric motor but their consequences can lead to damage inside the motor.

Faults	Causes	Effects	Consequences on the motor and on the machine
Short-circuit	Contact between several phases, or between one phase and neutral or between several turns of the same phase.	■ Current peak ■ Electrodynamic forces on the conductors	Destruction of windings
Overvoltage	■ Lightning ■ Electrostatic discharge ■ Operation	Dielectric breakdown in the windings	Destruction of the windings due to loss of insulation
Phase imbalance and phase failure	■ Opening of a phase ■ Single-phase load upstream of the motor ■ Short-circuit between the turns of the same winding	■ Reduction of usable torque, efficiency and speed ■ Increase in losses ■ Starting impossible if phase failure	Overheating (1)
High starting frequency	■ Failure of the automation system ■ Too many manual control operations ■ Numerous fault trips	High stator and rotor temperature rise due to the frequent start current	Overheating (1) Consequences on the process
Voltage variations	■ Instability of the mains voltage ■ Connection of heavy loads	■ Reduction of usable torque ■ Increase in losses	Overheating (1)
Harmonics	■ Pollution of the mains supply by variable speed drives, inverters, etc...	■ Reduction of usable torque ■ Increase in losses	Overheating (1)
Long starting time	■ Resistive torque too high (load too heavy) ■ Voltage drop	Increase in starting time	Overheating (1)
Jamming	■ Mechanical problem (crusher) ■ Seizures	Overcurrent	Overheating (1) Consequences on the process
No-load running	■ Pump running empty ■ Mechanical break in drive to the load	Drop in current drawn	Consequences on the process
Frequency fluctuations	■ Overload of a supply powered by limited independent sources ■ Faulty alternator speed regulator	■ Increase in losses ■ Interferes with synchronous devices (clock, recorder, ...)	–
Overload	■ Increase in resistive torque ■ Voltage drop ■ Drop in power factor	Increase in current consumption	Overheating (1)
Loss of machine excitation	■ Significant drop in excitation current ■ Break in rotor winding	■ Increase in active power ■ Drop in power factor	Significant overheating of rotor and cage
Phase-Earth fault	■ Accidental Phase-Earth contacts ■ Accidental Phase-machine casing contacts (casing connected to earth)	■ Overvoltage developed in the mains supply ■ Rise in earth potential (safety of persons)	Consequences on safety of persons

(1) Then, in the longer or shorter term, depending on the seriousness of the fault and/or its frequency, short-circuit and destruction of the windings.

Protection functions

Short-circuit protection

General

A short-circuit results in a very rapid rise in current which can reach several hundred times the value of the operational current. The consequences of a short-circuit are dangerous to both equipment and persons. It is therefore imperative to use protection devices to detect the fault and very quickly break the circuit.

Two types of protection are commonly used:
■ fuses (cutout) which break the circuit by melting, which then requires their replacement,
■ magnetic trip circuit breakers, often more simply called "magnetic circuit breakers", which only require re-setting to put them back into service.
Short-circuit protection can also be built-into multifunction devices such as motor circuit breakers and contactor-breakers.

The main characteristics of short-circuit protection devices are:
■ their breaking capacity: this is the highest prospective short-circuit current value that a protection device can break at a given voltage.
■ their making capacity: this is the highest current value that the protection device can make at its rated voltage in specified conditions.
The making capacity is equal to k times the breaking capacity.

PB114116.eps

Switch disconnectors
Ref. GS2N3

Fuses (cutouts)

Fuses provide individual phase protection (single-pole), with a high breaking capacity in a compact size:
■ mounted either in fuse carriers,
■ or in isolators, replacing the original links or shunt bars.

For motor protection, aM type fuses are used. Their design characteristics allow them to conduct the high magnetising currents that occur when motors are switched on. They are therefore unsuitable for overload protection (unlike gG type fuses). This is why an overload relay must be included in the motor power supply circuit.

PB121671.eps

Deca Magnetic circuit breaker
Ref. GV2L

PB114909.eps

Deca Magnetic circuit breaker
Ref. GV4LE

Magnetic circuit breakers

These circuit breakers protect installations against short-circuits, within the limit of their breaking capacity.
Magnetic circuit breakers provide omnipole breaking as standard.
For relatively low short-circuit currents, the operation of a circuit breaker is faster than that of fuses.
This protection conforms to standard IEC 60947-2.
The thermal and electrodymanic effects are also limited, therefore ensuring better protection of cables and equipment.

Life Is On Schneider Electric

PB121694.tif

Deca Thermal overload relay
Ref. LRD08

PB121503.eps

Current measurement relay
Ref. RM4JA

Protection functions

Overload protection

General

An overload condition is the most frequently encountered fault. The symptoms are a rise in the current drawn by the motor and thermal effects. A rapid return to normal operating conditions is important.
The actual operating conditions (ambient temperature, operating altitude and type of standard duty) are essential to determine the operating values of the motor (power, current) and to be able to select effective overload protection. These operational values are given by the motor manufacturer.

According to the level required, protection can be provided by:
■ overload relays and thermal overload relays (bi-metallic or electronic type) which protect motors in the event of:
□ overload, by monitoring the current drawn by each phase,
□ phase imbalance or failure, by their differential mechanism.
■ overtorque relays,
■ multifunction relays.

Overload relays

These relays protect motors against overload. They must allow the temporary overload that occurs on starting and must only trip if the starting time is abnormally long.
The overload relay will be selected according to the length of the starting time (tripping class) and the motor rating.
These relays have a thermal memory (except for certain electronic overload relays, indicated by their manufacturers) and can be connected:
■ either in series with the load,
■ or to current transformers placed in series with the load.

Bi-metallic thermal overload relays
Combined with a contactor, these relays protect the line and the equipment against small and prolonged overloads. They must be protected against strong overcurrent by a circuit breaker or fuses.
These relays may be used on an a.c. or d.c. system and are generally:
■ 3-pole,
■ compensated, i.e. insensitive to ambient temperature variations,
■ with manual or automatic reset,
■ graduated with a "motor FLC" scale: allowing direct setting to the full load current as shown on the motor rating plate.
They can also be sensitive to phase failure: this is known as 'differential'. This function conforms to standards IEC 60947-4-1 and 60947-6-2.
This type of relay is extremely reliable and is a relatively low cost device.

Electronic thermal overload relays
Electronic thermal overload relays have the advantage of electronics which allow a more complex thermal image of the motor to be created.
They can be combined with products having complementary functions, such as:
■ temperature sensing via PTC probes,
■ protection against jamming and overtorque,
■ protection against phase reversal,
■ earth fault protection,
■ protection against no-load running,
■ alarm function.

Protection functions *(continued)*

Overload protection (continued)

With direct sensing of the stator windings, these relays can be used to protect motors against:
- overload,
- a rise in ambient temperature,
- a ventilation circuit fault,
- a high starting frequency,
- mechanical shocks, etc.

Overload (or overtorque) relays

These relays protect the drive line in the event of a locked rotor, seizure or mechanical shocks. This is an additional protection.
Unlike thermal overload relays, these relays do not have a thermal memory. They have definite time characteristics (adjustable current threshold and time delay).
The overtorque relay can be used as overload protection for motors with long starting times or very frequent starting (for example, lifting hoists).

Multifunction relays

- Overcurrent relays are limited when it is necessary to take into account problems associated with voltage, temperature or special applications. New production or maintenance management needs have prompted manufacturers to offer products which provide not only adaptable protection, but also complete management of the motor and its load.

They incorporate:
- current and voltage sensors (T controllers),
- hybrid analog and digital electronic technology,
- the use of communication buses for data exchange and control,
- powerful motor modelling algorithms,
- integrated application programs whose parameters can be set.

These products make it possible to reduce installation and operating costs by reducing maintenance and downtime.

T controllers:
The multifunction relay is separate from the power line and incorporates inputs and outputs. It can be used in conjunction with a contactor up to 810 A.

PB121504.eps

T controller
Ref. LTMR08MBD

Life Is On Schneider Electric

Motor and machine protection

Protection relay selection table

	Motor protection	Machine protection	Motor and machine protection
Relay type	**Thermal overload relay** **Ref.** **LR2K, LRD, LRD3, LR9D (1), LR9G**	**Overtorque relays** **Ref.** **LR97D, LT47**	**T controller** **Ref.** **LTMR**
Causes of overheating	(2)	(2)	(3)
Slight overload			
Locked rotor			
No-load running			
Supply phase failure		LR97D	
Ventilation fault			With probes
Abnormal temperature rise			With probes
Shaft bearing seizure			With probes
Insulation fault			
Protracted starting time			
Severe duty			With probes
Voltage variation			
Frequency fluctuations			
Loss of machine excitation			

Ideally suited

Possible solution

Not suitable (no protection)

*(1) For motor circuit breaker ref. **GV2ME**.*
(2) Protection based on current.
(3) Protection based on current and voltage.

Characteristics

Environment

Conforming to standards			IEC/EN 60947-4-1, IEC/EN 60947-5-1, UL 60947-4-1, CSA C22.2 n° 60947-4-1, UL 60947-5-1, CSA C22.2 n° 60947-5-1, GB/T14048.
Product certifications			UL , CSA, CCC, EAC, CB, UKCA certification
Degree of protection	Conforming to IEC 60529		Protection against direct finger contact
Ambient air temperature around the device	Storage	**°C**	-40...+70
	For normal operation (IEC 60947)	**°C**	-20...+55 (without derating)
	Operating limit	**°C**	-30...+60 (with derating) (1)
Maximum operating altitude	Without derating	**m**	2000
Operating positions			**Vertical axis** 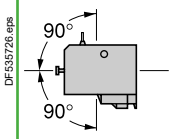 Without derating **Horizontal axis** 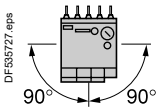 With derating (1)
Flame resistance	Conforming to 60695-2-11	**°C**	850
Shock resistance, hot state (1/2 sine wave, 11 ms)	Conforming to IEC 60068-2-27, N/C contact		10 gn
	Conforming to IEC 60068-2-27, N/O contact		10 gn
Vibration resistance, hot state 5 to 300 Hz	Conforming to IEC 60068-2-6, N/C contact		2 gn
	Conforming to IEC 60068-2-6, N/O contact		2 gn

Cabling Screw clamp terminals			Minimum	Maximum	Maximum to IEC 60947
	Solid cable	**mm²**	1 x 1.5	2 x 4	1 x 4 + 1 x 2.5
	Flexible cable without cable end	**mm²**	1 x 0.75	2 x 4	2 x 2.5
	Flexible cable with cable end	**mm²**	1 x 0.34	1 x 1.5 + 1 x 2.5	1 x 1.5 + 1 x 2.5

Tightening torque	Philips head n° 2 - Ø6	**N.m**	0.8
Mounting			Directly under the contactor or reversing contactor
Connections			Made automatically when mounted under the contactor, as follows: ■ contactor terminal A2 connected to overload relay terminal 96 on all products, ■ contactor terminal 14 connected to overload relay terminal 95 on products with 3 P + N/O. When using 3 P + N/C, or 4 P contactors, or the N/O auxiliary contact marked 13-14, at a voltage other than the coil voltage, break off the link marked 14.

Auxiliary contact characteristics

Number of contacts			1 N/C + 1 N/O						
Conventional thermal current		**A**	6						
Short-circuit protection	Conforming to IEC 60947 gG fuse or circuit breaker GB2CB●●	**A**	6 max.						
Maximum power of the controlled contactor coils (sealed) (Occasional operating cycles of contact 95-96)	a.c.	**V**	24	48	110	220/230	400	415/440	600/690
		VA	100	200	400	600	600	600	600
	d.c.	**V**	24	48	110	220	250	–	–
		W	100	100	50	45	35	–	–
Maximum operational voltage	a.c., category AC-15	**V**	690						
	d.c., category DC-13	**V**	250						

(1) Please consult your Regional Sales Office.
(2) Very low safety voltage.

References:
pages B11/2 and B11/3
Dimensions:
page B11/26
Schemes:
page B11/26

Characteristics

Electrical characteristics of the power circuit

Rated operational voltage (Ue)	Up to	**V**	690
Rated insulation voltage (Ui)	Conforming to IEC 60947	**V**	690
	Conforming to UL 60947-4-1, CSA C22.2 n° 60947-4-1	**V**	600
Rated impulse withstand voltage (Uimp)		**kV**	6
Frequency limits of the operational current		**Hz**	Up to 400
Power dissipated per pole		**W**	2

Operating characteristics

Tripping threshold	Conforming to IEC 60947-4-1	**A**	1.14 ±0.06 Ir
Sensitivity to phase failure	Conforming to IEC 60947		Yes
Reset	Manual or automatic		Selected by means of a lockable and sealable switch on the front of the relay
Signalling	On front of relay		Trip indicator
Reset-Stop function			Pressing the Reset-Stop button: - actuates the N/C contact - has no effect on the N/O contact
Test function	By pushbutton		Pressing the Test button enables: - checking of the control circuit wiring - simulation of overload tripping (actuation of both N/C and N/O contacts, and of the trip indicator)
Short-circuit protection and coordination			See pages A5/59 and A5/77

Tripping curves

Average operating time related to multiples of the current setting (Class 10 A)

Balanced 3-phase operation, from cold state

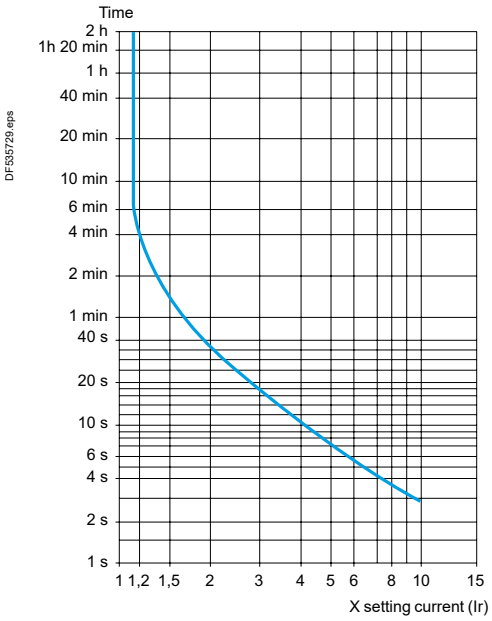

Balanced operation with 2 phases only, from cold state

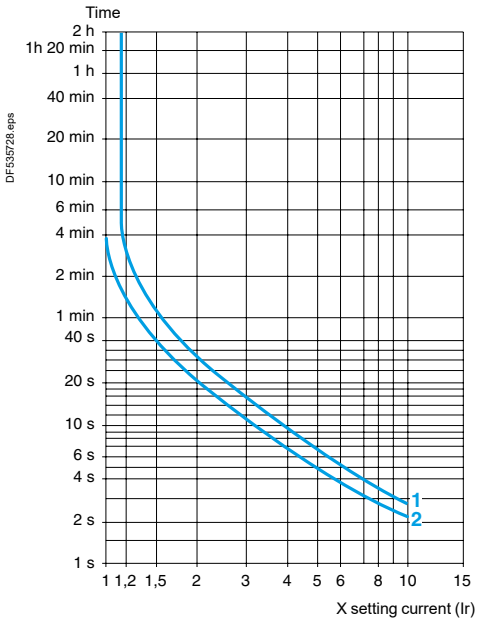

Setting: at lower end of scale

Setting: at upper end of scale

Ref.
Overload relays

References:
pages B11/2 and B11/3

Dimensions:
page B11/26

Schemes:
page B11/26

Dimensions, mounting, schemes

Dimensions, mounting

LR2K

Direct mounting beneath the contactor

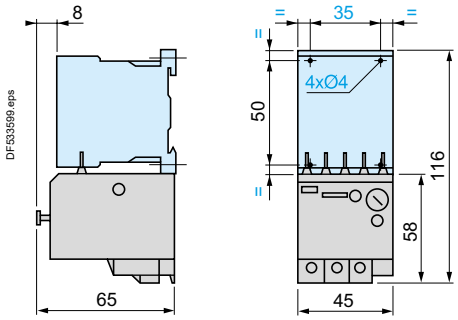

Separate mounting with terminal block LA7K0064 on 35 mm ⎍ rail
(AM1DP200 or AM1DE200)

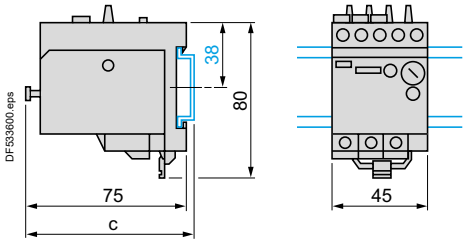

AM1	c
DP200	78.5
DE200	86

Schemes

LR2K

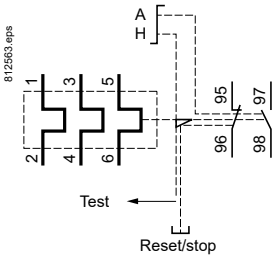

LR2K + LC●K

Pre-wiring scheme

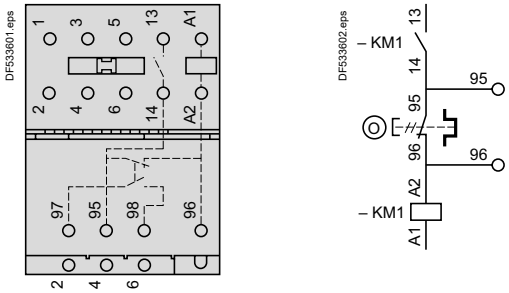

LR7K

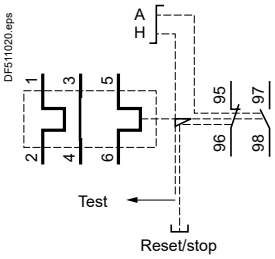

Note: *If pre-wiring is not required, break off the 2 links located on the thermal overload relay.*

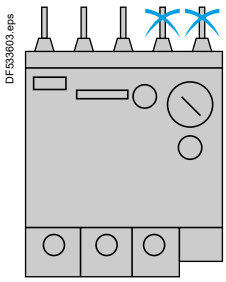

Ref.

Overload relays

References:
pages B11/2 and B11/3

Characteristics:
pages B11/24 and B11/25

Life Is On Schneider Electric

PB121694.tif

Ref. LRD08

PB121670_R.eps

Ref. LRD05L...32L

PB123810.eps

Ref. LRD365

EverLink®

PB123837.tif

Ref. LRD33●●

DF567968.eps

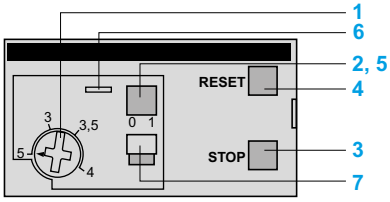

Ref. LRD01…35, LRD05L...32L
LRD313…LRD365

DF567969.eps

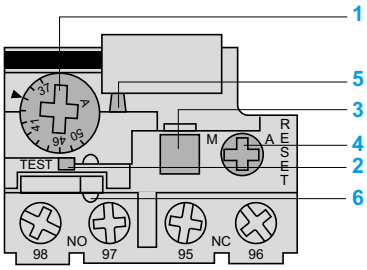

Ref. LRD3361…4369, LR2 D3561…3563

Introduction

3-pole Deca thermal overload relays are designed to protect a.c. circuits and motors against:
- overloads
- phase failure
- excessively long starting times
- prolonged stalled rotor condition.

Power connection

Product references LRD01 to LRD35
LRD01 to 35 relays are designed for connection by screw clamp terminals.
They can be supplied for connection by spring terminals or by lugs (1).

Product references LRD04 to LRD32L
These relays are designed for connection by screw clamp terminals. They can be supplied for connection by lugs (1).

Product references LRD313 to LRD380
These relays are for connection by BTR screw connectors (hexagon socket head).
The screws are tightened by means of a size 4, insulated Allen key.
This type of connection uses the **Ever**Link® system with creep compensation (2) (Schneider Electric patent).
This technique makes it possible to achieve accurate and durable tightening torque.

These relays are also available for connection by lugs (1).

Product references LRD3361 to 4369, LR2D3561 to D3563
Product references LRD3361 to 4369 and LR2D3561 to D3563 relays are designed for connection by screw clamp terminals. They can be supplied for connection by lugs (1).

Description

Deca 3-pole thermal overload relays are designed to protect a.c. circuits and motors against overloads, phase failure, long starting times and prolonged stalling of the motor.

1 Adjustment dial Ir.
2 Test button.
Operation of the Test button allows:
- checking of control circuit wiring,
- simulation of relay tripping (actuates both the N/O and N/C contacts).
3 Stop button. Actuates the N/C contact; does not affect the N/O contact.
4 Reset button.
5 Trip indicator.
6 Setting locked by sealing the cover.
7 Selector for manual or automatic reset.

Product references LRD01 to 35, LRD05L to 32L and LRD313 to LRD380 relays are supplied with the selector in the manual position, protected by a cover. Deliberate action is required to move it to the automatic position.

(1) Connection by lugs meets the requirements of certain Asian markets and is suitable for applications subject to strong vibration, such as railway transport.
(2) Creep: normal crushing phenomenon of copper conductors, that is accentuated over time.

Ref.
Overload relays

References:
pages B11/4 to B11/7
Dimensions, mounting:
pages B11/31 to B11/33
Schemes:
page B11/33

Characteristics

Environment

Conforming to standards			IEC/EN 60947-4-1, IEC/EN 60947-5-1, UL 60947-4-1, CSA C22.2 n° 60947-4-1 UL 60947-5-1, CSA C22.2 n° 60947-5-1, EN 50495 (1), GB/T 14048.4, GB/T 14048.5
Product certifications			UL (2), CSA (2), UKCA IEC, CCC (3), EAC, ATEX (1) ABS, BV (4), DNV-GL (5), LRoS (6), RINA (7), RMRS (8), EU RO Mutual recognition (9)
Degree of protection (front face)	Conforming to IEC 60529		Protection against direct finger contact IP20
Climatic withstand			Conforming to IACS E10
Ambient air temperature around the device	Storage	**°C**	-60…+70
	Normal operation, without derating (IEC 60947-4-1)	**°C**	-20…+60
	Minimum /maximum operating temperatures (with derating)	**°C**	-20…+70
Operating positions without derating	In relation to normal vertical mounting plane		Any position. When mounting on a vertical rail, use a stop.
Flame resistance	Conforming to 60695-2-11	**°C**	850
Shock resistance	Permissible acceleration conforming to IEC 60068-2-27		15 gn - 11 ms
Vibration resistance (10)	Permissible acceleration conforming to IEC 60068-2-6		6 gn except LRD05L...LRD32L: 3 gn
Dielectric strength at 50 Hz	Conforming to IEC 60947-1	**kV**	1.89 (product Ui 690 V), 2.2 (product Ui 1000 V)
Impulse withstand voltage	Conforming to IEC 60947-1	**kV**	6

Electrical characteristics of power circuit

Relay type			**LRD01 …16, LR3D02 …16**	**LRD05L ...32L**	**LRD21 …35, LR3D21 …35**	**LRD313 …365 LR3D 313 …38**	**LRD313L …365L**	**LRD3322 …33696 LR3D3322 … 33696**	**LR2D 3522 … 3563**	**LRD 4365 … 4369**
Tripping class	Conforming to UL 60947-4-1, IEC 60947-4-1		10 A	20	10 A	10 A	20	10 A	20	10 A
Rated insulation voltage (Ui)	Conforming to IEC 60947-4-1	**V**	690					1000 (11)		
	Conforming to UL, CSA	**V**	600							600 except **LRD 4369**
Rated impulse withstand voltage (Uimp)		**kV**	6							
Rated operational voltage (Ue)		**V**	690							
Frequency limits	Of the operating current	**Hz**	0…400							
Setting range	Depending on model	**A**	0.1…13	0.63…32	12…38	9…80	9…65	17…140	17…80	80…140

Auxiliary contact characteristics

Conventional thermal current		**A**	5					
Max. sealed consumption of the operating coils of controlled contactors (Occasional operating cycles of contact 95-96)	a.c. supply, AC-15	**V**	120	240	380	480	500	600
		A	3	1.5	0.95	0.75	0.72	0.12
	d.c. supply, DC-13	**V**	125	250	440			
		A	0.22	0.1	0.06			
Protection against short-circuits	By gG, BS fuses. Maximum rating or by GB2	**A**	4					

*(1) For relays **LRD01** to **LRD380**, **LRD3322** to **LRD3365**, **LRD04L** to **LRD32L**, **LRD4365** to **LRD4369**, **LRD33656** to **LRD33696**.*
*(2) Except for relays **LRD4369**.*
*(3) CCC: Except for **LRD/LR3D04L** to **LRD/LR3D32L**, **LR2D3522** to **LR2D3563**.*
*(4) BV: except for **LRD/LR3D04L** to **LRD/LR3D32L**, **LRD/LR3D313** to **LRD/LR3D380, LR2D3522 to LR2D3563.***
*(5) DNV-GL: except for **LRD04L** to **LRD32L**.*
*(6) LRoS: except for **LRD/LR3D04L** to **LRD/LR3D32L**, **LRD/LR3D380**.*
*(7) RINA: for **LRD/LR3D01** to **LRD/LR3D35**.*
*(8) RMRS: for **LRD/LR3D313** to **LRD/LR3D380**.*
*(9) EU RO Mutual Recognition: for **LRD/LR3D313** to **LRD/LR3D380**, **LRD313L** to **LRD365L**.*
(10) In case of vibration above 3gn on Deca Advanced contactor directly mounted with LRD, it is recommended do mount the devices separately by screws on metal plate.
*(11) 750 V for **LRD33656**, **LRD33676**, **LRD33696**.*

References: pages B11/4 to B11/7
Dimensions, mounting: pages B11/31 to B11/33
Schemes: page B11/33

Characteristics

Power circuit connection characteristics

Relay type			LRD01 …16, LR3D01 …16	LRD04L ...21L	LRD22L ...32L	LRD21 …35, LR3D21 …35	LRD 313 …365 LR3D 313 …380	LRD 313L …365L	LRD 3322 …33696 LR3D 3322 … 33696	LR2D 3522 …3563	LRD 4365 …4369
Connection to screw clamp terminals											
Flexible cable without cable end	1 conductor	mm²	1.5…10			1.5…10	1…35	1…35	4…35		4…50
Flexible cable with cable end	1 conductor	mm²	1…4		1...6	1…6 except **LRD21:** 1…4	1…35	1…35	4…35		4…35
Solid cable without cable end	1 conductor	mm²	1…6		1.5…10	1.5/10 except **LRD21:** 1/6	1…35	1…35	4…35		4…50
Tightening torque		N.m	1.7		2.5	2.5	1…25: 5 35: 8	1…25: 5 35: 8	9	9	9
Connection to spring terminals (Min/max c.s.a.) (except LRD04L...LRD32L)											
Flexible cable without cable end	1 conductor	mm²	1.5…4	–	–	1.5…4	–	–	–	–	–
Flexible cable with cable end	1 conductor	mm²	1.5…4	–	–	1.5…4	–	–	–	–	–

Connection by bars or lugs

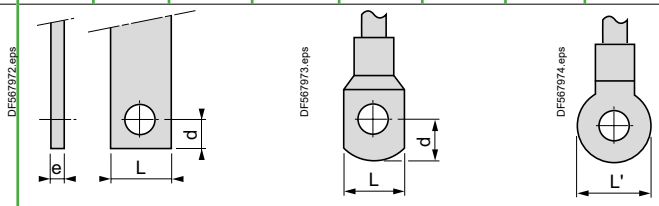

Relay type			LRD016…166 LRD04L6 … 16L6	LRD216…356 LRD21L6 … 32L6	LRD3136 … 3806	LRD313L6 … 365L6	LRD3322A66 … 3365A66
Pitch	Without spreaders	mm	14.5	17.5	17.5	17.5	21.5
Bars or cables with lugs	e	mm	≤ 6	≤ 6	≤ 6	≤ 6	≤ 6
	L	mm	≤ 8	≤ 8	≤ 13.5	≤ 13.5	≤ 16
	L'	mm	≤ 9.5	≤ 9.5	≤ 16.5	≤ 16.5	≤ 16
	d		≤ 7	≤ 7	≤ 10	≤ 10	≤ 12
Screws			M4	M4	M6	M6	M10
	Tightening torque	N.m	1.7	2.5	6	6	11.3

Control circuit connection characteristics

Connection to screw clamp terminals or spring terminals

Bare cables

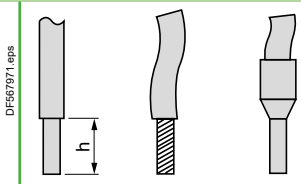

Relay type			LRD01 …16, LR3D01 …16	LRD04L ...21L	LRD22L ...32L	LRD21 …35, LR3D21 …35	LRD 313 …365 LR3D 313 …380	LRD 313L …365L	LRD3322 …33696 LR3D 3322 … 33696	LR2D 3522 … 3563	LRD 4365 …4369
Connection to screw clamp terminals (1)	Solid cable without cable end	mm²	2 x 1…2.5								
	Flexible cable without cable end	mm²	2 x 1…2.5								
	Flexible cable with cable end	mm²	2 x 1…2.5								
Tightening torque		N.m	1.7								
Connection to spring terminals (Min/max c.s.a.) (except LRD04L...LRD32L)	Solid cable	mm²	1…2.5	–		1…2.5			–		
	Flexible cable without cable end	mm²	1…2.5	–		1…2.5			–		

*(1) For relays **LRD313** to **380**: BTR hexagon socket head screws, **Ever**Link® system.*
*In accordance with local electrical wiring regulations, a size 4 insulated Allen key must be used (reference **LADALLEN4**, see page B11/21).*

References:
pages B11/4 to B11/7
Dimensions, mounting:
pages B11/31 to B11/33
Schemes:
page B11/33

Characteristics

Operating characteristics

Relay type			LRD01 …16, LR3D02 …16	LRD04L… LRD32L	LRD21 …35, LR3D21 …35	LRD313 …365 LR3D 313 …380	LRD313L …365L	LRD3322 …33696 LR3D3322 … 33696	LR2D 3522 … 3563	LRD 4365 …4369
Temperature compensation		°C	-20…+60							
Tripping threshold	Conforming to IEC 60947-4-1	A	1.14 ±0.06 Ir							
Sensitivity to phase failure			Tripping current 130 % of Ir on two phases, the third phase at 0.							

Tripping curves

Average operating time related to multiples of the setting current

LRD01 to LRD35, LR2D and LRD3322 to LRD4369

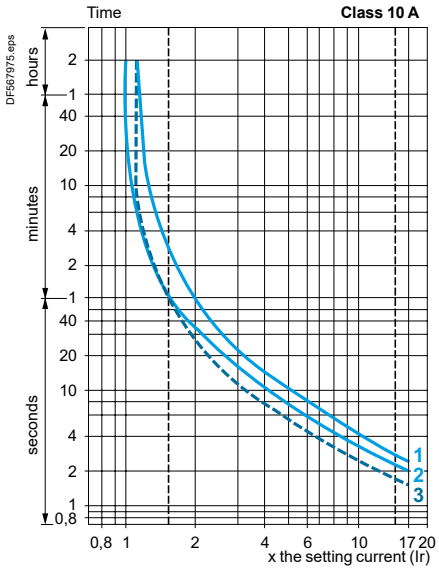

LRD04L to LRD32L and LR2D3522 to LR2D3563

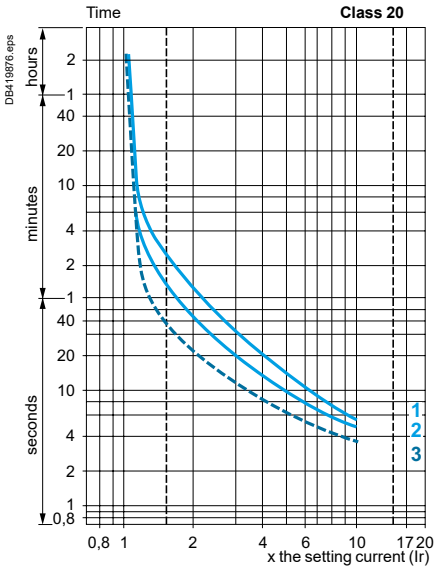

LRD313 to LRD380

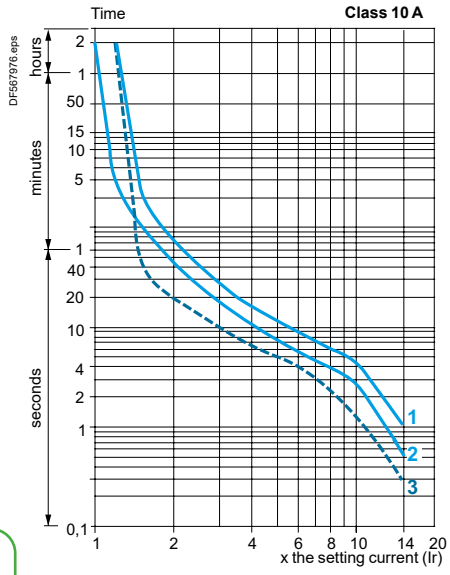

LRD313L to LRD365L

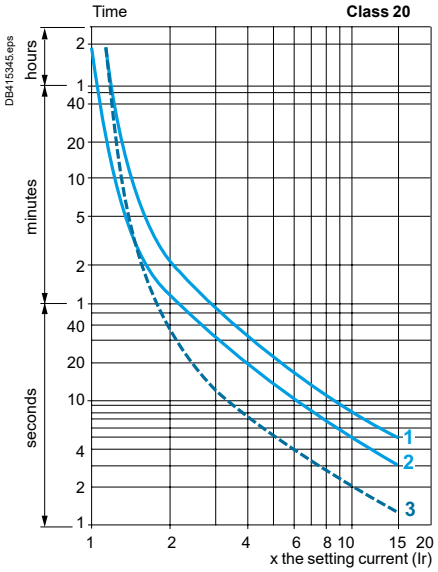

1 Balanced operation, 3-phase, without prior current flow (cold state).
2 2-phase operation, without prior current flow (cold state).
3 Balanced operation, 3-phase, after a long period at the set current (hot state).

Ref.
Overload relays

Dimensions, mounting

LRD01…35 (1)

Direct mounting beneath contactors with screw clamp connections

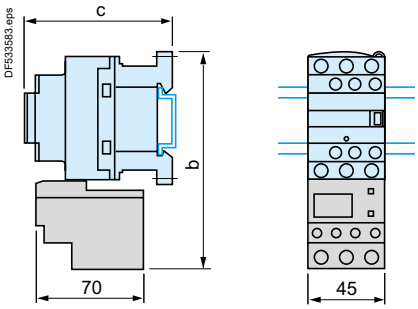

LC1	D09…D18	D25…D38
b	123	137
c	See pages B11/28 and B8/100	

LRD04...32L (1)

Direct mounting beneath contactors with screw clamp connections

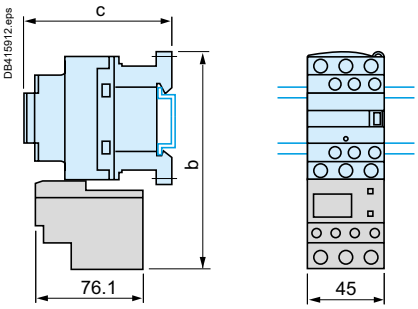

LC1	D09…D18	D25…D38
b	123	137
c	See pages B11/28 and B8/100	

LRD063…223

Direct mounting beneath contactors with spring terminal connections

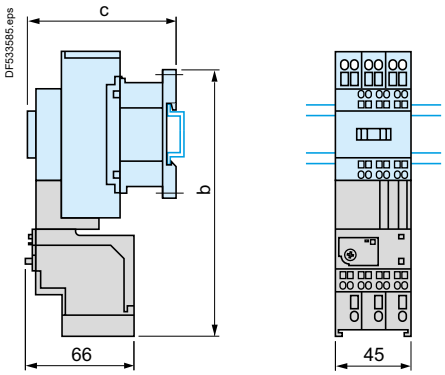

LC1	D093…D253
b	168
c	See pages B11/28 and B8/100

LRD313…380 (1)

Direct mounting beneath contactors LC1D40A…D80A with screw clamp connections or EverLink® connectors

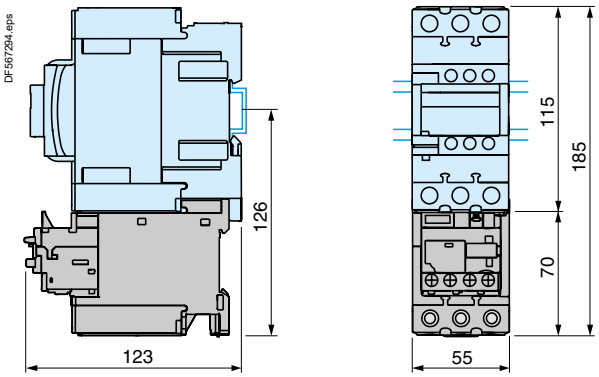

LRD3256…3806 (1)

Direct mounting beneath contactors LC1D40A6…D80A6 with lugs

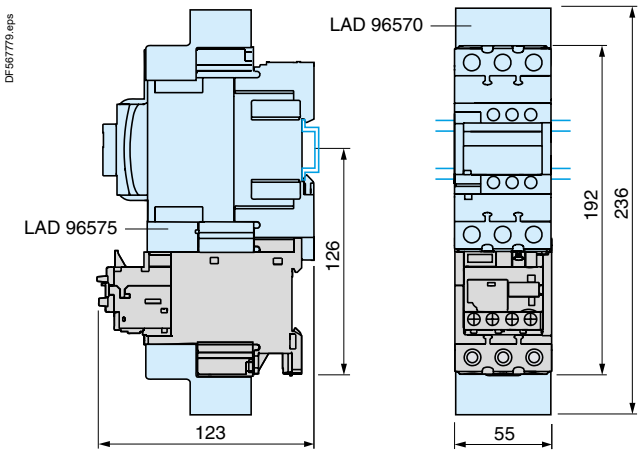

LRD33●●●

Direct mounting beneath contactors LC1D80…D95

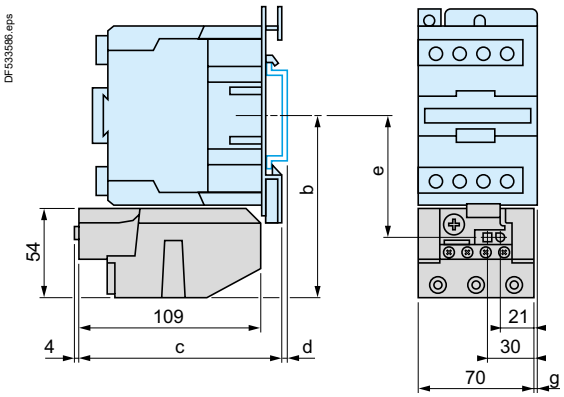

AM1	DL201	DL200
d	7	17

Control circuit AC	b	c	e	g (tri)	g (tetra)
LC1D80	115.5	124	76.9	9.5	22
LC1D95	115.5	124	76.9	9.5	-
Control circuit DC					
LC1D80, D95	115.5	179.4	76.9	9.5	22

(1) In case of vibration above 3 gn on Deca Advanced contactor directly mounted with LRD, it is recommended do mount the devices separately by screws on metal plate.

References:
pages B11/4 to B11/7

Characteristics:
pages B11/27 to B11/30

Schemes:
page B11/33

Dimensions, mounting

LRD4●●●

Direct mounting beneath contactors LC1D115 and D150

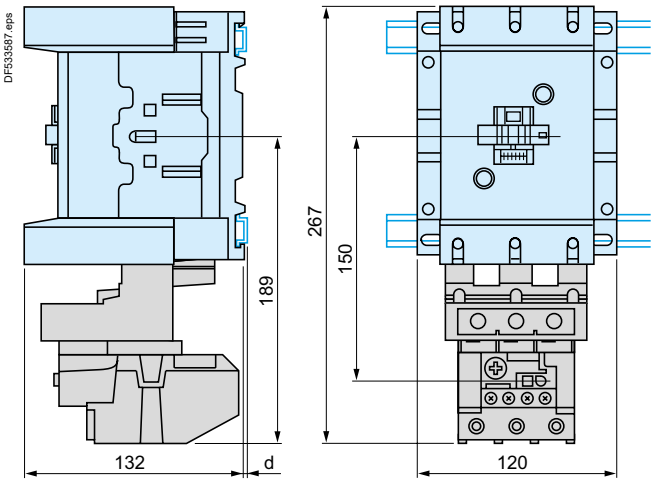

AM1	DL200 and DR200	DE200 and ED●●●
d	2.5	10.5

LRD01…35

Independent mounting on 50 mm centres or on rail AM1DP200 or DE200

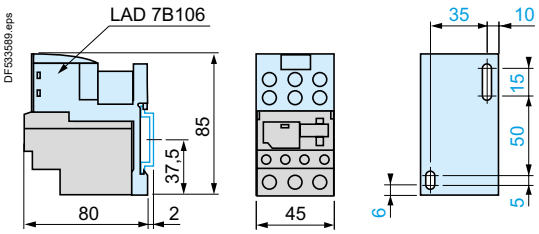

Independent mounting on 110 mm centres

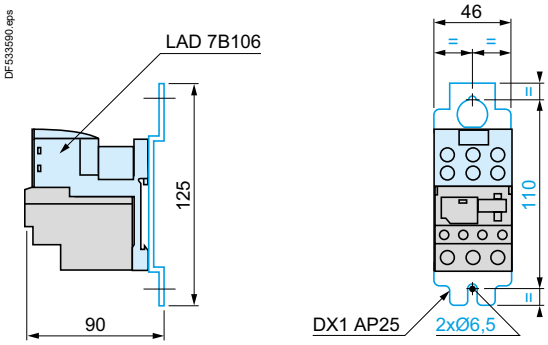

LRD313…380

Mounting on rail AM1D●200 or ED200

With terminal block LAD96560

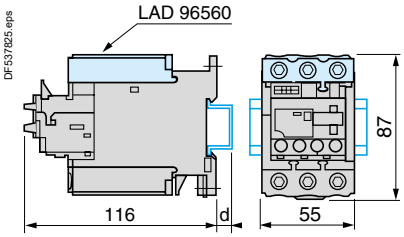

AM1	DP200	DE200	ED200
d	2	9.5	9.5

Panel mounting

Outgoing terminal block not shown

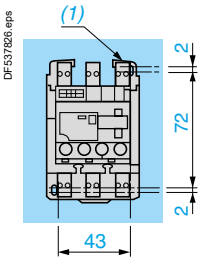

(1) 2 elongated holes Ø 4.2 x 6.

Mounted on plate AM1P

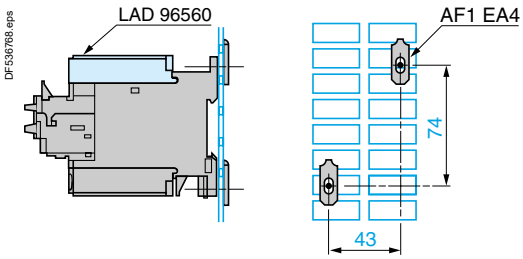

LRD01…35 and LRD313…380

Remote tripping or electrical reset

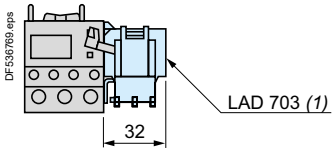

*(1) Can only be mounted on RH side of relay **LRD01**…**35** and **LRD313**…**380** .*

References:
pages B11/4 to B11/7

Characteristics:
pages B11/27 to B11/30

Schemes:
page B11/33

Dimensions, mounting and schemes

LRD04L...32L

Independent mounting on 50 mm centres or on rail AM1DP200 or DE200

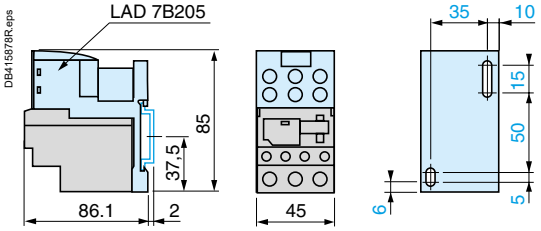

AM1	DP200	DE200
d	2	9.5

Independent mounting on 110 mm centres

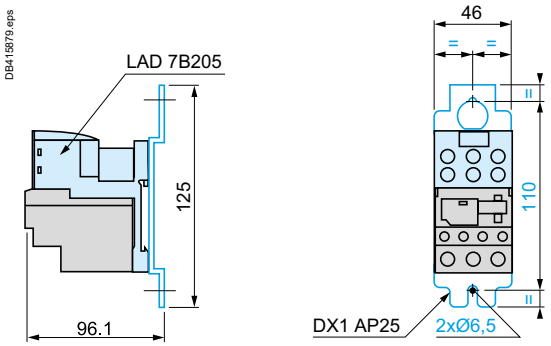

Remote tripping or electrical reset

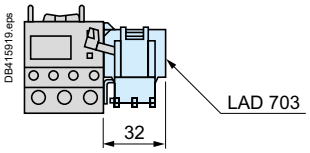

(1) Can be mounted on RH or LH side of relay LR2D15.

LRD3●●● and LR2D35●●

Independent mounting on 50 mm centres or on rail AM1DP200 or DE200

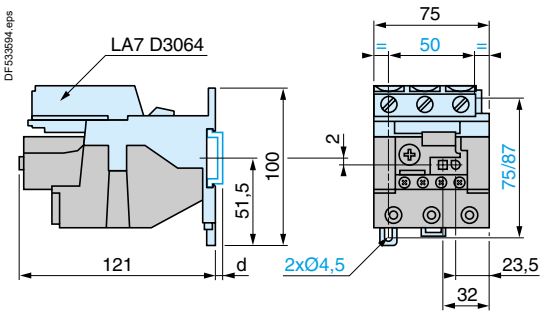

AM1	DP200	DE200
d	2	9.5

LRD3●●●, LR2D35●● and LR9D

Remote tripping or electrical reset

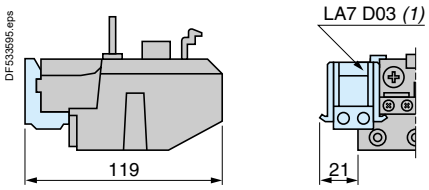

*(1) Can be mounted on RH or LH side of relay **LRD3●●●**, **LR2D35●●** or **LR9D**.*

LRD3●●●

Adapter for door mounted operator

LA7D1020

Stop

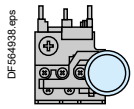

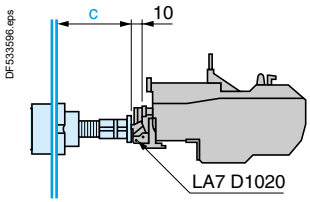

Reset

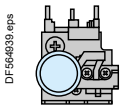

c: adjustable from 17 to 120 mm

LRD, LRD313…380, LRD04...32L

"Reset" by flexible cable

LA7D305 and LAD7305

Mounting with cable straight

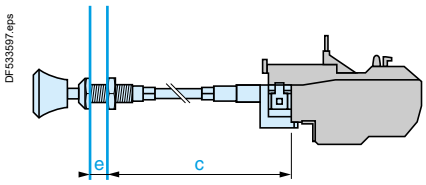

e: up to 20 mm / c: up to 550 mm

Mounting with cable bent

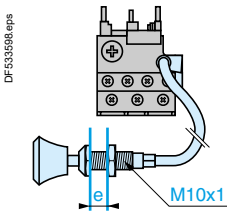

LRD●●, LRD3●● and LR2D●●

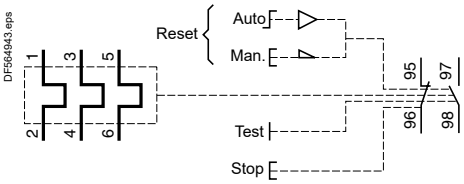

Pre-wiring kit LAD7C1, LAD7C2

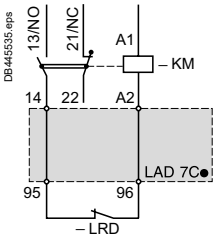

References:
pages B11/4 to B11/7

Characteristics:
pages B11/27 to B11/30

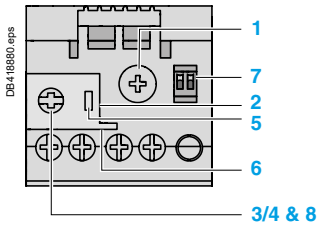

LR9D01...32

Product references LR9D01, 02, 08 and 32

These self-powered electronic thermal overload relays are designed for direct mounting to contactors LC1D09 through LC1D38.

In addition to the protection provided by the Deca thermal overload relays (see page B11/31), they offer the following additional features:
- protection against phase imbalance
- choice of starting class
- protection of unbalanced circuits
- protection of single-phase circuits

1	Adjustment dial Ir.
2	Test button.
3	Stop button.
4	Reset button.
5	Trip indicator.
6	Setting locked by sealing the cover.
7	Class 5/10/20/30 dipswitches.
8	Reset mode selector.

Environment

Relay type			LR9D01, 02, 08, 32
Conforming to standards			IEC/EN 60947-4-1, IEC/EN 60947-5-1, UL 60947-4-1, CSA C22.2 n° 60947-4-1, UL 60947-5-1, CSA C22.2 n° 60947-5-1, GB/T 14048.4
Product certifications			CCC, CSA, UL, CB, UKCA certification
Degree of protection	Conforming to IEC 60529 and VDE 0106		IP 20 on front panel
Ambient air temperature around the device (Conforming to IEC 60255-8)	Storage	**°C**	-55 to +80
	Normal operation	**°C**	-25 to +70
Maximum operating altitude	Without derating	**m**	2000
Operating positions without derating	In relation to normal vertical mounting plane		Any position
Shock resistance	Permissible acceleration conforming to IEC 60068-2-27		15 g (11ms)
Vibration resistance	Permissible acceleration conforming to IEC 60068-2-6		6 g (10-150 Hz)
Dielectric strength at 50 Hz	Conforming to IEC 60947-4-1	**kV**	6
Surge withstand, common mode	Conforming to IEC 61000-4-5	**kV**	2
Resistance to electrostatic discharge	Conforming to IEC 61000-4-2	**kV**	8
Immunity to radiated radio-frequency disturbances	Conforming to IEC 61000-4-3 and NF C 46-022	**V/m**	10
Immunity to fast transient currents	Conforming to IEC 61000-4-4	**kV**	2
Electromagnetic compatibility	Draft EN 50081-1 and 2, EN 50082-2		Meets requirements

Electrical characteristics of auxiliary contacts

Conventional thermal current		**A**	5					
Max. sealed consumption of the operating coils of controlled contactors (Occasional operating cycles of contact 95-96)	a.c. supply, AC-15	**V**	24	48	110	220	380	600
		VA	100	200	400	600	600	600
	d.c. supply, DC-13	**V**	24	48	110	220	–	–
		W	100	100	50	45	–	–
Protection against short-circuits	By gG or BS fuses or by circuit breaker **GB2**	**A**	5					
Cabling Flexible cable without cable end	1 or 2 conductors	**mm² (AWG)**	1 to 2.5 (18 to 14)					
	Tightening torque	**Nm (lb-in)**	0.8 (7)					

Ref.
Overload relays

Electrical characteristics of power circuit

Relay type			LR9D01	LR9D02	LR9D08	LR9D32
Tripping class	Conforming to IEC/EN 60947-4-1		5, 10, 20, 30			
	Conforming to UL 60947-4-1, CSA C22.2 n° 60947-4-1		10, 20, 30			
Rated insulation voltage (Ui)	Conforming to IEC 60947-4-1	**V AC**	1000			
Rated operational voltage (Ue)	Conforming to IEC 60947-4-1	**V AC**	690			
	Conforming to UL/CSA	**V AC**	600			
Rated impulse withstand voltage		**kV**	6			
Frequency limits	Of the operating current	**Hz**	50…60			
Setting range		**A**	0.1...0.5	0.4...2	1.6...8	6.4...32
Power circuit connections	Wire size - 1 or 2 conductors	**mm² (AWG)**	1 to 16 (14 to 6)			
	Tightening torque	**Nm (lb-in)**	3.1 (28)			

Operating characteristics

Consumption		**mW**	< 300
Tripping thresholds	Conforming to IEC 60947-4-1	**A**	1.25 In
Sensitivity to phase unbalance	Conforming to IEC 60947-4-1		Phase difference > 40%, tripping in 3 s
Current setting ratio			5:1
Automatic reset time		**min.**	1.5…4

LR9D01, 02, 08, 32 tripping curves

Class 5 Trip curve

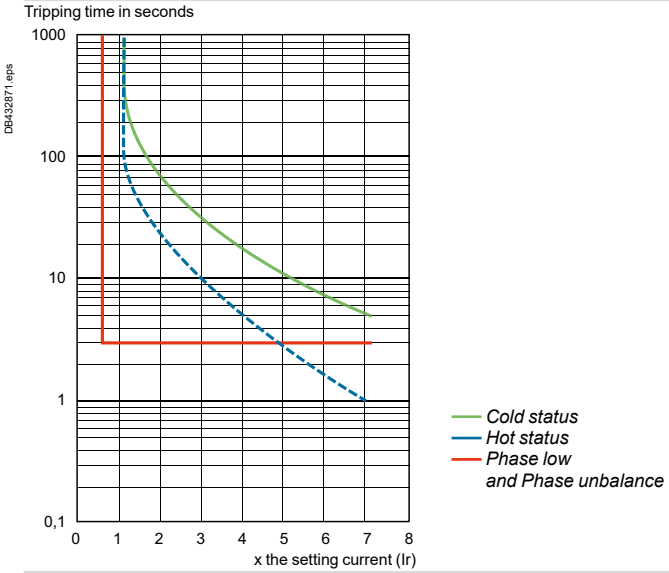

Class 10 Trip curve

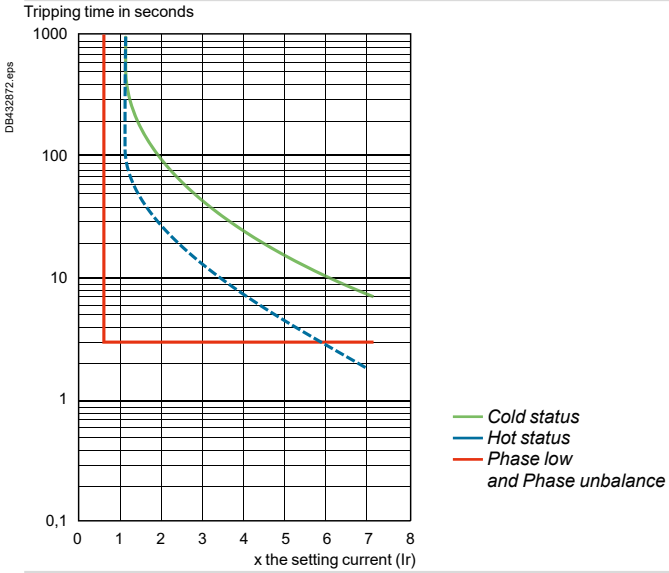

Class 20 Trip curve

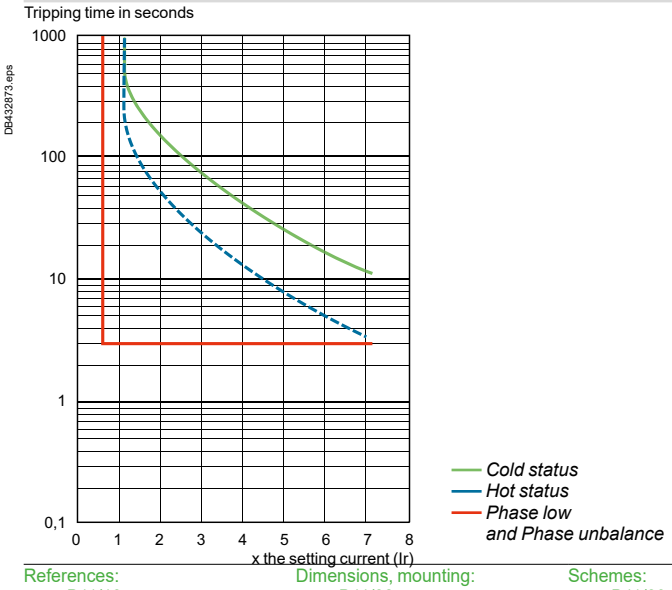

Class 30 Trip curve

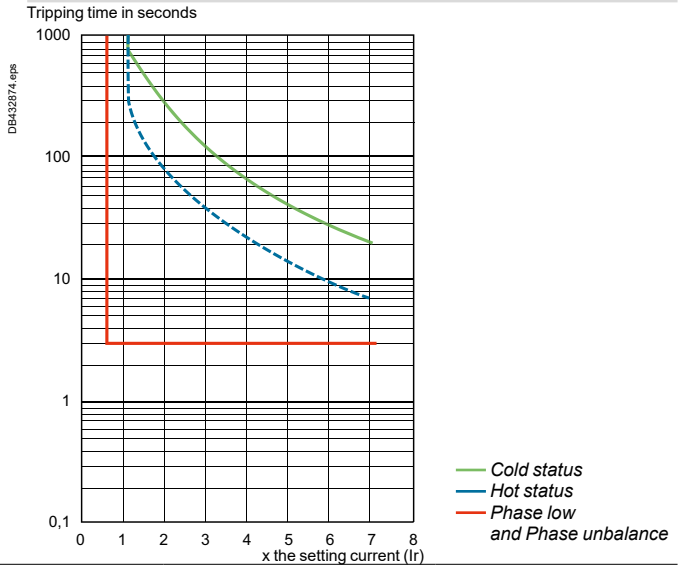

References: page B11/10
Dimensions, mounting: page B11/38
Schemes: page B11/39

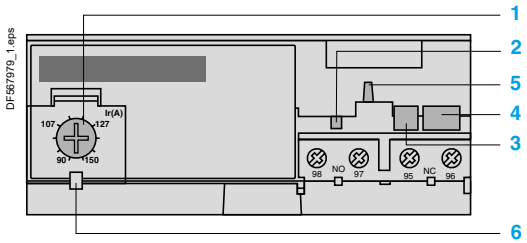

LR9D5367…D5569

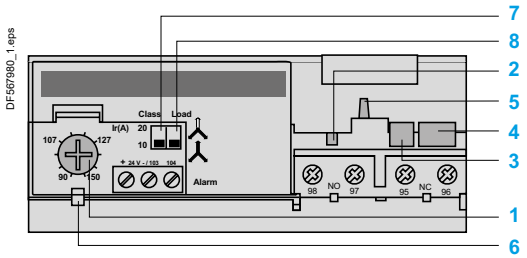

LR9D67 and D69

Description: LR9D5367...LR9D5569, LR9D67, LR9D69

These electronic thermal overload relays are designed for use with contactors LC1D115 and D150.

In addition to the protection provided by Deca thermal overload relays (see page B11/27), they offer the following special features:

- protection against phase imbalance
- choice of starting class
- protection of unbalanced circuits
- protection of single-phase circuits
- alarm function to avoid tripping by load shedding.

1	Adjustment dial Ir.
2	Test button.
3	Stop button.
4	Reset button.
5	Trip indicator.
6	Setting locked by sealing the cover.
7	Class 10/class 20 selector switch.
8	Selector for balanced load /unbalanced load

Environment

Relay type			LR9D5367...LR9D5569, LR9D67, LR9D69
Conforming to standards			IEC/EN 60947-4-1, IEC/EN 60947-5-1, UL 60947-4-1, CSA C22.2 n° 60947-4-1, UL 60947-5-1, CSA C22.2 n° 60947-5-1, GB/T 14048.4
Product certifications			UL, CSA, CCC, ABS, BV, DNV-GL, UKCA
Degree of protection	Conforming to IEC 60529		IP 20 on front panel with protective covers **LA9D11570●** or **D11560●**
Climatic withstand			according to IACS E10
Ambient air temperature around the device (Conforming to IEC 60255-8)	Storage	**°C**	- 40…+ 85
	Normal operation	**°C**	- 20…+ 55 (1)
Maximum operating altitude	Without derating	**m**	2000
Operating positions without derating	In relation to normal vertical mounting plane		Any position
Shock resistance	Permissible acceleration conforming to IEC60028-2-27		13 gn - 11 ms
Vibration resistance	Permissible acceleration conforming to IEC 60068-2-6		2 gn - 5…300 Hz
Dielectric strength at 50 Hz	Conforming to IEC 60947-4-1	**kV**	6
Surge withstand	Conforming to IEC 61000-4-5	**kV**	6
Resistance to electrostatic discharge	Conforming to IEC 61000-4-2	**kV**	8
Immunity to radiated radio-frequency disturbances	Conforming to IEC 61000-4-3	**V/m**	10
Immunity to fast transient currents	Conforming to IEC 61000-4-4	**kV**	2
Electromagnetic compatibility	EN 50081-1 and 2, EN 50082-2		Meets requirements

Electrical characteristics of auxiliary contacts

Conventional thermal current		**A**	5					
Max. sealed consumption of the operating coils of controlled contactors (Occasional operating cycles of contact 95-96)	a.c. supply	**V**	24	48	110	220	380	600
		VA	100	200	400	600	600	600
	d.c. supply	**V**	24	48	110	220	440	–
		W	100	100	50	45	25	–
Protection against short-circuits	By gG or BS fuses or by circuit breaker **GB2**	**A**	5					
Cabling Flexible cable without cable end	1 or 2 conductors	**mm²**	Minimum c.s.a.: 1 Maximum c.s.a.: 2.5					
	Tightening torque	**Nm**	1.2					

(1) For operating temperatures up to 70 °C, please consult your Regional Sales Office.

Ref.
Overload relays

Characteristics

Electrical characteristics of power circuit

Relay type			LR9D5367...LR9D5569, LR9D67, LR9D69
Tripping class	Conforming to IEC/EN 60947-4-1, UL 60947-4-1, CSA C22.2 n° 60947-4-1		10 or 20
Rated insulation voltage (Ui)	Conforming to IEC 60947-4-1	**V**	1000
	Conforming to UL, CSA	**V**	600
Rated impulse withstand voltage (Uimp)		**kV**	8
Frequency limits	Of the operating current	**Hz**	50…60 (1)
Setting range	Depending on model	**A**	60…150
Power circuit connections	Width of terminal lug	**mm**	20
	Clamping screw		M8
	Tightening torque	**N.m**	18

Operating characteristics

Temperature compensation		**°C**	- 20…+70
Tripping thresholds	Conforming to IEC 60947-4-1		
	Alarm	**A**	1.05 ±0.06 In
	Trip	**A**	1.12 ±0.06 In
Sensitivity to phase failure	Conforming to IEC 60947-4-1		Tripping in 4 s ±20 % in the event of phase failure

Alarm circuit characteristics

Rated supply voltage	d.c. supply	**V**	24
Supply voltage limits		**V**	17…32
Current consumption	No-load	**mA**	⩽ 5
Switching capacity		**mA**	0…150
Protection	Short-circuit and overload		Self protected
Voltage drop	Closed state	**V**	⩽ 2.5
Cabling	Flexible cable without cable end	**mm²**	0.5…1.5
Tightening torque		**N.m**	0.45

(1) For other frequencies and for applications involving the use of these overload relays with soft starters or variable speed drives, please consult your Regional Sales Office.

LR9D5367...LR9D5569, LR9D67, LR9D69 tripping curves

Tripping time in seconds

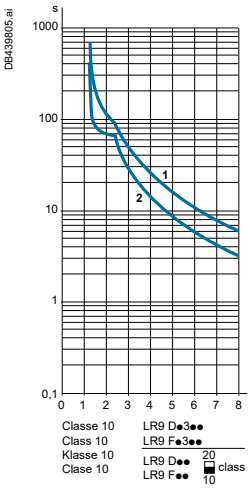

Tripping time in seconds

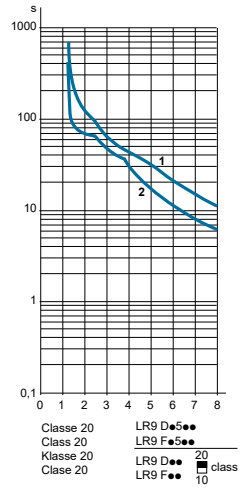

Average operating time related to multiples of the setting current

1 Cold state curve
2 Hot state curve

References:
page B11/10

Dimensions, mounting:
page B11/38

Schemes:
page B11/39

Dimensions, mounting

LR9D01, 02, 08, 32

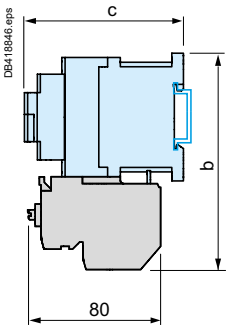

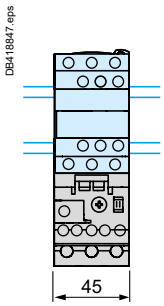

LC1	D09...D18	D25...D38
b	130	140
c	See pages B8/65 and B8/66	

LR9D01...32

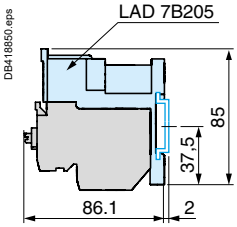

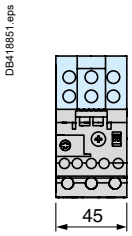

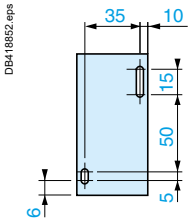

LR9D53●●, LR9D55●●, LR9D67, LR9D69

Direct mounting beneath contactors LC 1D115 and D150

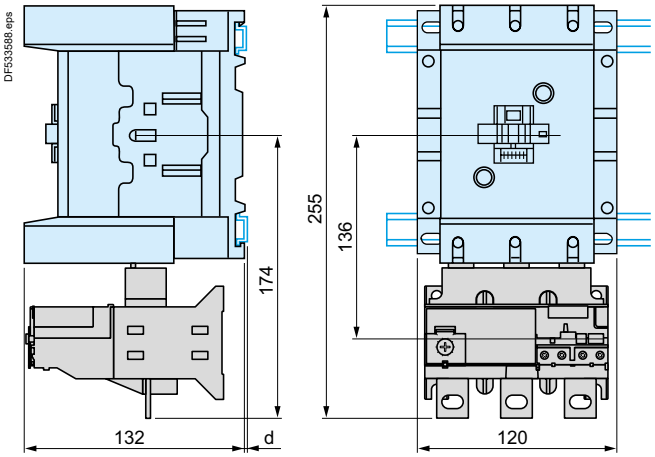

AM1	DP200 and DR200	DE200 and ED●●●
d	2.5	10.5

LR9D

"Reset" by flexible cable

LA7D305 and LAD7305

Mounting with cable straight

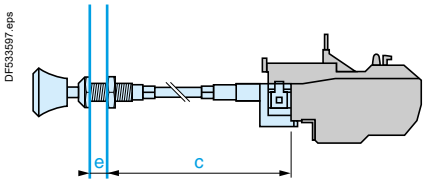

e: up to 20 mm / c: up to 550 mm

Mounting with cable bent

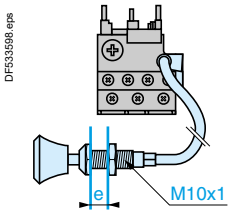

e: up to 20 mm

Ref.
Overload relays

Schemes

LR9D01, 02, 08, 32

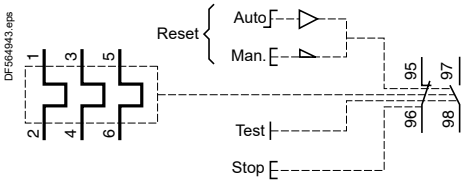

LR9D01, 02, 08, 32, LR9 D110S

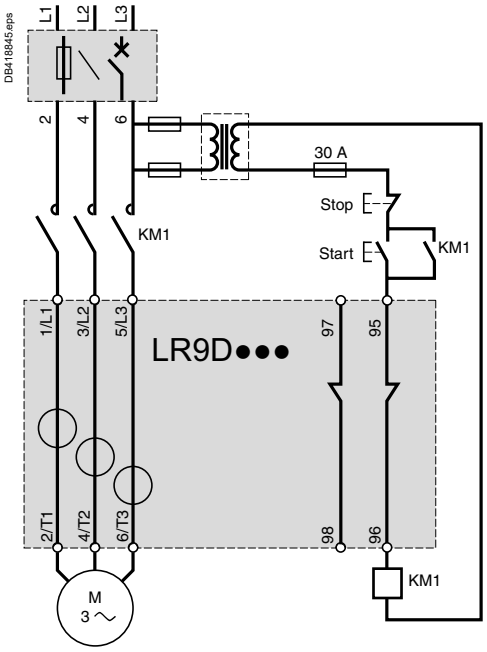

LR9D5•••

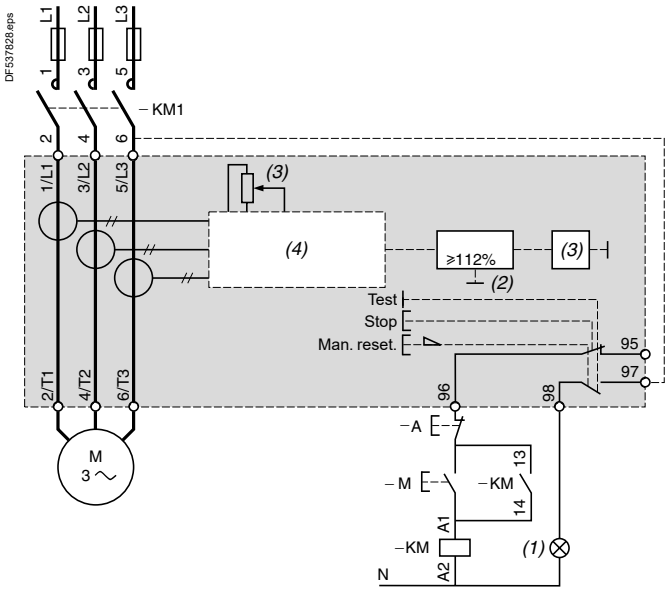

(1) Tripped.
(2) Overload.
(3) Setting current.
(4) Specialised circuit.

LR9D67 and LR9D69

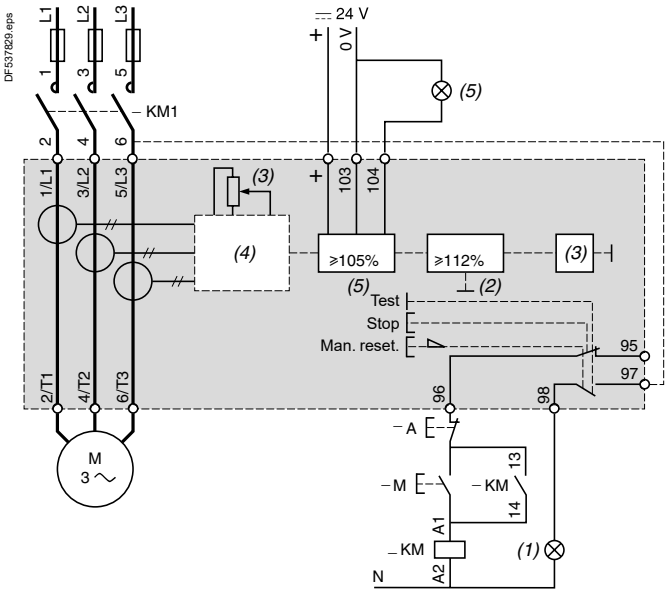

(1) Tripped.
(2) Overload.
(3) Setting current.
(4) Specialised circuit.
(5) Alarm.

References:
page B11/10

Characteristics:
pages B11/34 to B11/37

Dimensions:
page B11/38

Characteristics

Environment

Contactor type			LR9G115	LR9G225	LR9G500	LR9G630
Conforming to standards			IEC/EN 60947-4-1, IEC/EN 60947-5-1, UL 60947-4-1, CSA C22.2 n° 60947-4-1, UL 60947-5-1, CSA C22.2 n° 60947-5-1, GB/T 14048.4			
Product certifications			CB Scheme, CCC, cULus, UKCA, ATEX, EU-RO-MR by DNV			
Degree of protection	Conforming to IEC 60529 / VDE 0106		IP 20 on front of relay with accessories LA9G37●●			
Climatic withstand			according to IACS E10			
Ambient air temperature around the device (conforming to IEC 60255-8)	Storage	**°C**	-55...+80			
	Normal operation	**°C**	-25…+60			
Maximum operating altitude	Without derating	**m**	3000			
Net weight		**kg**	0.8		1.3	2.9
Operating positions without derating	In relation to normal vertical mounting plane / floor mounting		Any position			
Shock resistance 11 ms	Permissible acceleration conforming to IEC 60068-2-27		15 gn			
Vibration resistance 5 to 300 Hz	Permissible acceleration conforming to IEC 60068-2-6		6 gn			
Rated impulse withstand voltage (Uimp)	Conforming to IEC 60947-4-1	**kV**	8			
Surge withstand	Conforming to IEC 61000-4-5	**kV**	4			
Resistance to electrostatic discharge	Conforming to IEC 61000-4-2	**kV**	8 (in air) 6 (in direct mode)			
Resistance to radiated radio-frequency disturbance	Conforming to IEC 61000-4-3	**V/m**	20			
Resistance to fast transient currents	Conforming to IEC 61000-4-4	**kV**	4			
Electromagnetic compatibility	EN 50081-1 and 2, EN 50082-2		Conforming			

Characteristics

Power circuit - Electrical characteristics

Relay type			LR9G115	LR9G225	LR9G500	LR9G630
Rated insulation voltage (Ui)	Conforming to IEC 60947-4-1 Over-voltage category III, degree of pollution: 3	**V**	1000			
Rated impulse withstand voltage (Uimp)	Conforming to IEC 60947-1	**kV**	8			
Rated operational current (Ie)		**A**	28 to 630			
Short-circuit protection and coordination			See pages A5/54 to A5/55, A5/70 to A5/73 and A5/85 to A5/86.			
Frequency limits of the operating current		**Hz**	50 / 60			
Power circuit connections	Width of terminal lug	**mm**	18	18	30	48
	Clamping screw		M8	M8	M10	M12
	Tightening torque	**N.m**	18	18	35	58

Auxiliary contact electrical characteristics

Conventional thermal current		**A**	5						
Short-circuit protection	By gG fuses	**A**	6						
Connection (Push-in type)			**Min.**	**Max.**					
Flexible cable	1 conductor with cable end	**mm²**	0.25	2.5					
	2 conductors with Dual Sleeve	**mm²**	0.5	1					
Solid cable	1 conductor	**mm²**	0.2	2.5					
	Stripping length	**mm**	10	10					
Rated operational contact power	a.c. supply AC-15	**V**	**24**	**48**	**120**	**240**	**380**	**480**	**500**
		A	4	4	3	1.5	0.95	0.75	0.72
		VA	96	192	360	360	361	360	360
	d.c. supply DC-13	**V**	**24**	**48**	**125**	**250**	**–**	**–**	**–**
		A	2	0.7	0.22	0.11	–	–	–
		W	48	33.6	27.5	27.5	–	–	–
Maximum operational voltage	a.c., category AC-15	**V**	500	500	500	500	500	500	500
	d.c., category DC-13	**V**	250	250	250	250	250	250	250

Ref.
Overload relays

Operating characteristics

Tripping class	Conforming to IEC 60947-4-1			5E/10E/20E/30E
Operating temperature			°C	-40…+60 (1)
Reset				auto and manual
Trip alarm and fault indication				On front of relay
Test function				On front of relay
Tripping thresholds	Conforming to IEC 60947-4-1	Alarm		≥ 90% of permissible thermal state
		Tripping	A	1.2 ± 0.05 Ir
Sensitivity to phase loss	Conforming to IEC 60947-4-1			Tripping in 4 s ± 1 s in the event of phase loss
Phase imbalance	Conforming to IEC 60947-1			Tripping in 5 s ± 1 s if imbalance ratio ≥ 40 % according to Annex T5.5
Ground fault	Conforming to IEC 60947-4-1			Ig = 0.75 Ir Tripping 1 s ± 20 % if I ≥ 1.1 Ig
Adjustment (nominal motor current)				Setting dial on front of relay (64 settings)
Security sealing				Yes

(1) Adjustment of dial setting(s): -25...+60 °C.

LR9G tripping curves

Average operating times depending on multiples of the setting current

Class 5E

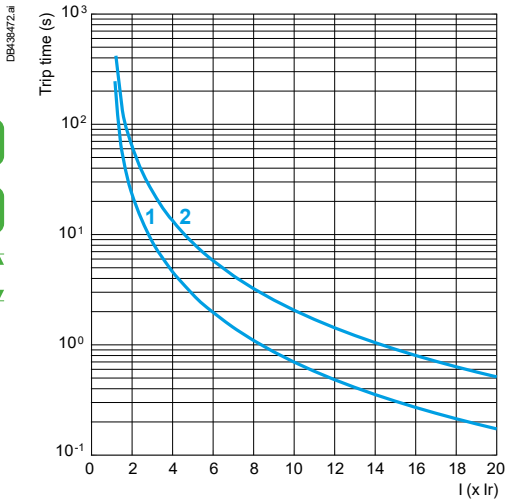

1 Hot state
2 Cold state

Class 10E

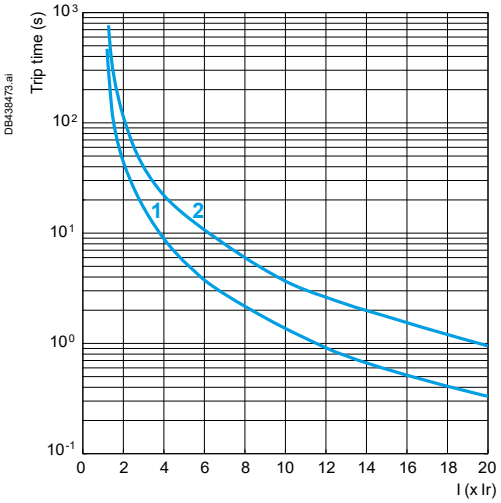

1 Hot state
2 Cold state

Class 20E

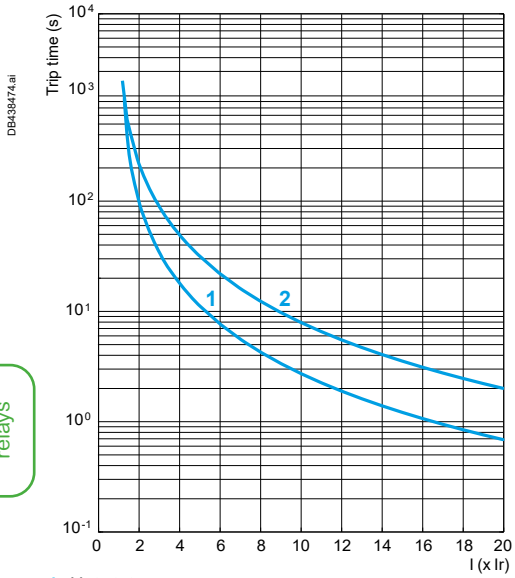

1 Hot state
2 Cold state

Class 30E

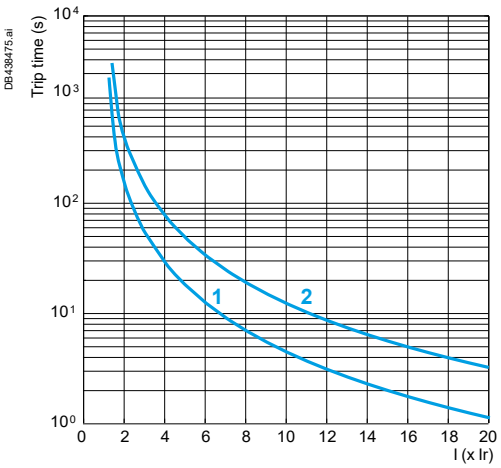

1 Hot state
2 Cold state

Introduction:
pages B11/11 to B11/12

References:
pages B11/13 to B11/14

Dimensions:
page B11/43

Dimensions and diagram

Dimensions

LR9G115...630

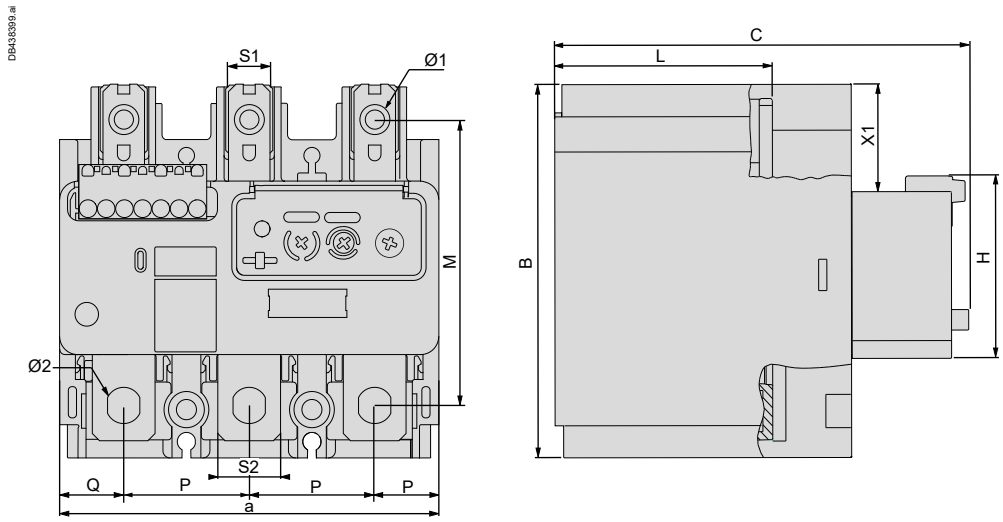

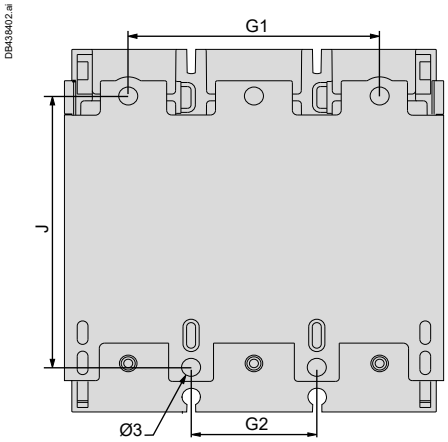

LR9G	115-225	500	630
a	105.7	140	210
b	109.55	115.65	149.45
c	126.2	139.2	185.9
G1	70	119.3	186.2
G2	35	45	70
J	80.1	68.25	86
M	78	83	100
H	52	52	52
L	66	79	107
P	35	45	70
Q	18	25	35
S1	11.5	22.5	22.5
S2	17.5	30.5	50
Ø1	8.3	10.6	13
Ø2	9	10.6	13
Ø3	5.3	5.3	8.5
X1	30	33	50

Diagram

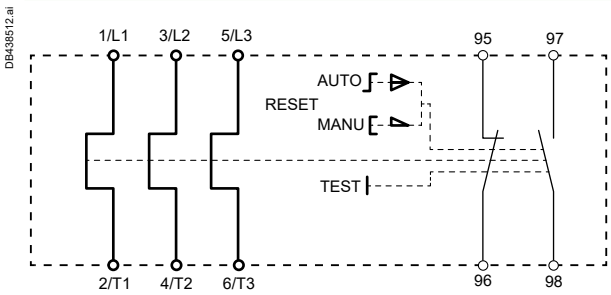

Overload relays

Introduction

PB111974.eps

LR97D

PB111927.eps

LT47

LR97D and LT47 electronic over current relays have been developed to satisfy machine protection requirements.
These relays have definite time characteristics: current threshold and time based function.
They are particularly recommended for providing mechanical protection on machines with high resistive torque, high inertia and with strong probability of jamming under steady state conditions.
They can be used for motor protection in the case of long starting times or frequent starting.
The LR97D relay also incorporates two fixed time protection functions, one of 0.5 seconds against locked rotor and one of 3 seconds against phase failure.
LR97D and LT47 can be used to provide mechanical shock protection. In this case, setting the O-Time knob to minimum will ensure tripping in 0.3 seconds.
LR97D is designed to be directly connected downstream of the Deca contactor.
LT47 provides two current transformers, to be crossed by the motor power cables.

Applications

LR97D and LT47 relays are particularly suitable for the following machines:
■ Monitoring function for excessively long starting time on machines with a risk of difficult starting:
□ Machines with high resistive torque, high inertia machines.
■ Monitoring of machines during steady state operation: overtorque detection function
□ Machines with strong risk of jamming, machines with torque build-up over time,
□ Mechanical failure monitoring,
□ Faster detection of malfunctioning on machines where the motor is oversized in relation to its thermal protection I²t.
■ Motor protection for specific applications:
□ Machines with long starting times,
□ Machines with high on-load factor: more than 30 to 50 starts/hour,
□ Machine with fluctuating load from a steady state, where the thermal image of a thermal overload relay (thermal memory) is unsuitable in relation to actual overheating of the motor.

Examples of machines:
□ Conveyors, crushers and mixers,
□ Fans, pumps and compressors,
□ Centrifuges and spin-dryers,
□ Presses, shearing machines, saws, broaching machines, sanders and lifting hoists.

Operation

Because of their two separate time settings, LR97D and LT47 relays can be combined with the motor-starter function:
D-Time: starting time, O-Time: trip time during steady state.
The D-Time function is only available during the motor starting phase. During this phase the overload detection function is inhibited in order to allow starting. Under steady state conditions, when the motor current is greater than the setting current due to an overload or single-phasing, the red LED lights up and the internal relay switches its contact after a time preset by the O-Time knob.
The red LED stays on, indicating that the relay has tripped.

The relays are simple to set, in 5 easy steps:
- Adjust the 3 knobs to maximum (Load, D-Time and O-Time),
- Adjust the D-Time knob to the value corresponding to the motor starting time.
- When the motor reaches steady state, adjust the Load knob (turn the knob counter-clockwise until the red LED starts to flicker).
- Slowly turn the Load knob clockwise until the LED goes out.
- Set the required tripping time, using the O-Time knob.

Description

Description

LR97D●●●●●

DF531695.eps

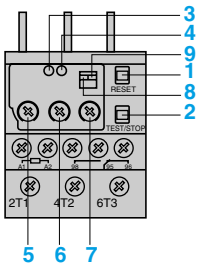

LT47●●●●●

DF531696.eps

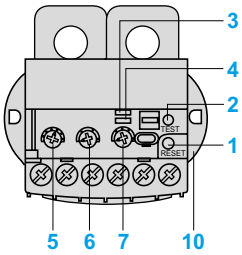

1 RESET knob
2 TEST/STOP knob
3 Ready/Run Indicator
4 Relay tripped indicator
5 Current setting
6 Adjustment of starting time
7 Adjustment of tripping time
8 Manual/Auto adjustment
9 Single-phase/3-phase adjustment
10 Retractable fixing lugs

Status signalling

LR97D●●●●●

To assist fast diagnostics, two LEDs (one green and one red) allow signalling of the operating status:

DF563948.eps

Status			LED signal	
			Green LED	Red LED
Voltage			On	Off
Starting				
Steady state			On	Off
Overload			On	
Trip	Over-current		Off	On
	Rotor locked		Off	
	Phase failure	L1	Off	
		L2	Off	
		L3	Off	

LT47●●●●●

DF563947.eps

Condition	LED signal	
	Green LED	Red LED
Voltage	On	Off
Starting		
Steady state	On	Off
Overload	On	
Trip	Off	On

References:
page B11/15

Dimensions, mounting:
page B11/48

Schemes:
page B11/48

Curves

LR97D

Overload protection
Protection against locked rotor and mechanical jamming under steady state conditions

DF532218.eps

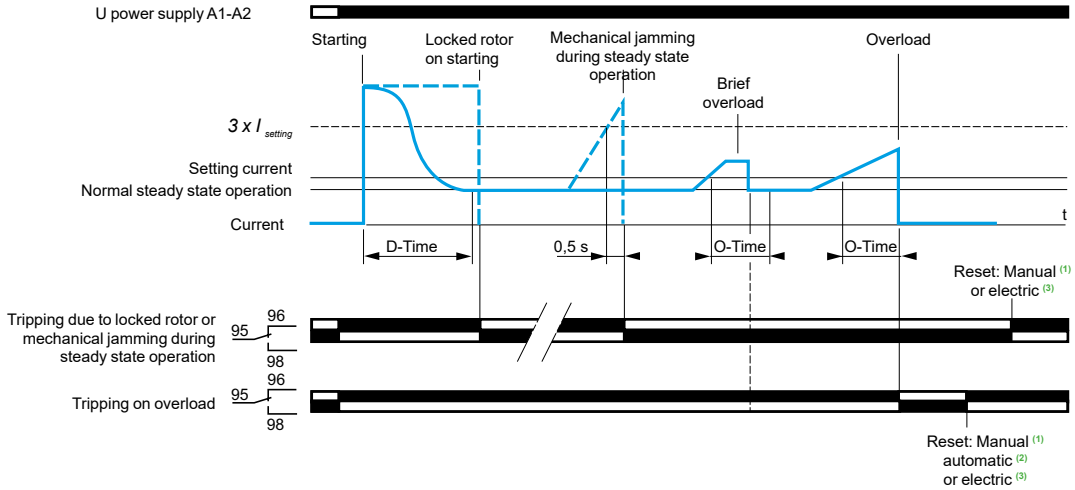

Overload protection
Protection against phase failure during starting and during steady state operation

DF532219.eps

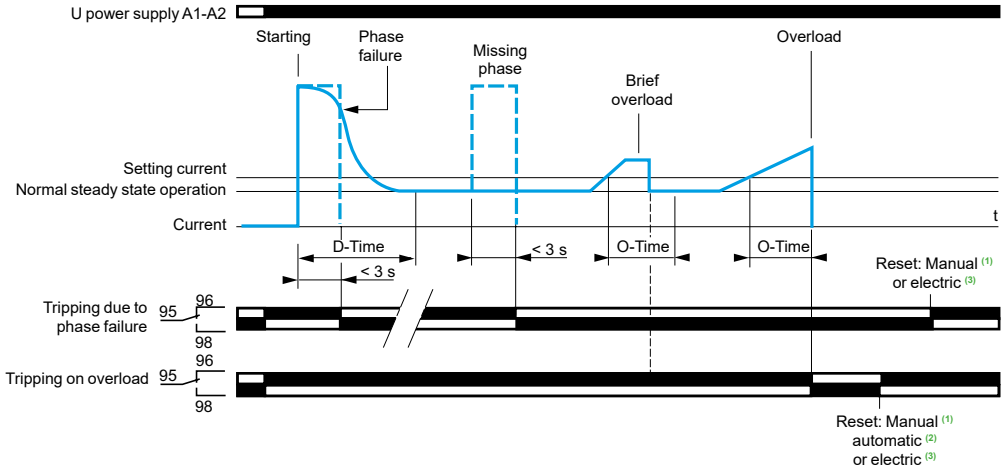

Mechanical shock protection

DF532220.eps

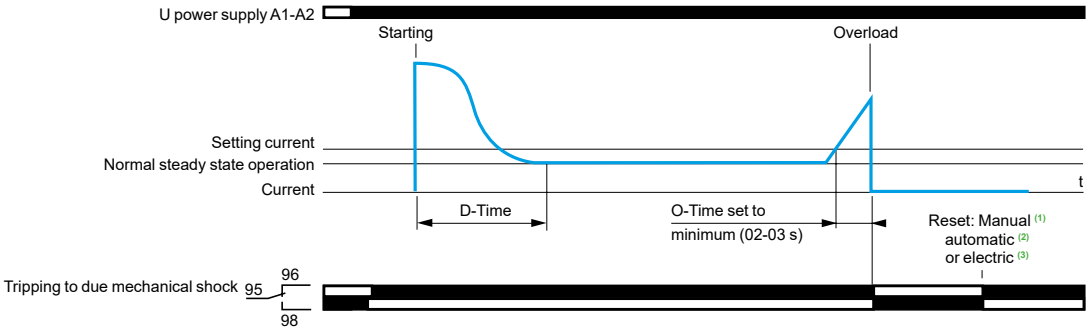

(1) By Reset button.
(2) Fixed time of 120 s. Selectable by dip switch. Function not available in the event of tripping due to locked rotor/mechanical jamming (I> 3 x I setting) or phase failure.
(3) By brief interruption of power supply, minimum 0.1 s.

References: page B11/15
Dimensions, mounting: page B11/48
Schemes: page B11/48

Curves

LT47

Overload protection

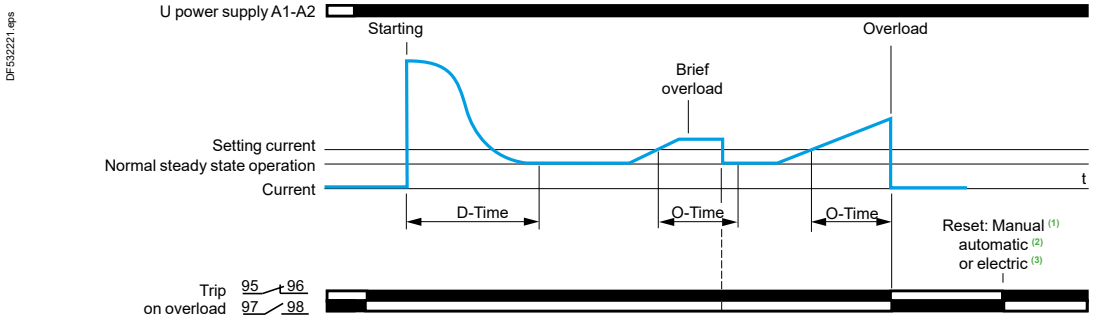

Mechanical shock protection

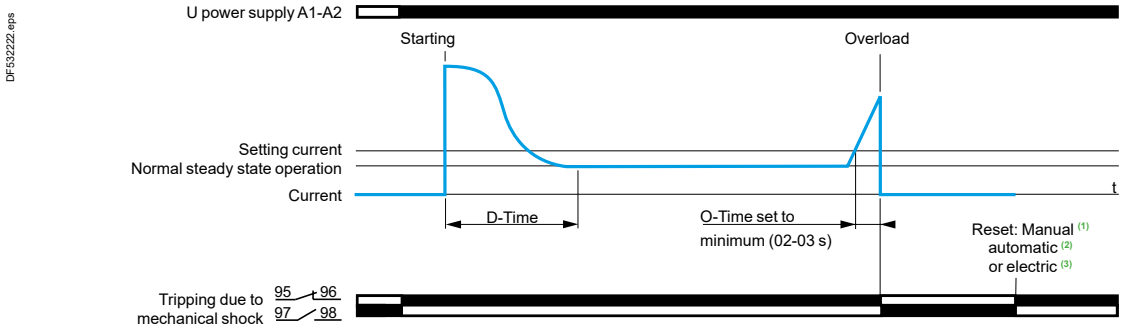

(1) By Reset button.
*(2) Only available on version with automatic reset (**LT47●●●●A**). Time adjustable from 1 to 120 s with the R-Time knob.*
(3) By brief interruption of power supply, minimum 0.1 s.

Characteristics

Environment

Relay type			LR97D●●●●	LT47●●●●
Conforming to standards			IEC/EN 60947-4-1, IEC/EN 60947-5-1, UL 60947-4-1, CSA C22.2 n° 60947-4-1, UL 60947-5-1, CSA C22.2 n° 60947-5-1, GB/T 14048.5	IEC/EN 60947-4-1, IEC/EN 60947-5-1, UL 60947-4-1, CSA C22.2 n° 60947-4-1, UL 60947-5-1, CSA C22.2 n° 60947-5-1, GB/T 14048.5
Product certifications			UL, CSA, CCC, EAC	UL, CSA, CCC, EAC
Degree of protection	Conforming to IEC 60529		IP 20 (front face)	IP 20 (front face)
Ambient air temperature around the device	Storage	**°C**	- 30…+ 80	- 30…+ 80
	Normal operation without derating (IEC 60947-4-1)	**°C**	- 25…+ 60	- 25…+ 60
Maximum operating altitude		**m**	2000	2000
Operating positions without derating	In relation to normal vertical mounting plane		Any position	Any position
Shock resistance	Permissible acceleration conforming to IEC 60068-2-27		15 gn - 11 ms	15 gn - 11 ms
Vibration resistance	Permissible acceleration conforming to IEC 60068-2-6		4 gn	4 gn
Dielectric strength at 50 Hz	Conforming to IEC 60947-4-1	**kV**	2	2
Surge withstand	Conforming to IEC 61000-4-5	**kV**	6	6
Resistance to electrostatic discharge	In open air	**kV**	8 (level 3)	8 (level 3)
	In direct mode	**kV**	6 (level 3)	6 (level 3)
Immunity to radiated radio-frequency disturbance		**V/m**	10 (level 3)	10 (level 3)
Immunity to fast transient currents		**kV**	2	2
Conducted emissions	Conforming to EN 55011		Class A	Class A
Conducted HF disturbance	Conforming to EN 61000-4-6	**V**	10	10

Characteristics

Characteristics

Auxiliary contact characteristics

Relay type				LR97D●●●●●				LT47●●●●●			
Contact type				1 NO/NC				1 N/O + 1N/C			
Conventional thermal current			A	3				3			
Maximum hold consumption of controlled contactor coils (occasional operating cycles of contact 95-96)	Conforming to IEC 60947		V	∼ 24	∼ 48	∼ 110	∼ 220	∼ 24	∼ 48	∼ 110	∼ 220
			VA	70	140	360	360	70	140	360	360
			V	⎓ 24	⎓ 48	⎓ 110	⎓ 220	⎓ 24	⎓ 48	⎓ 110	⎓ 220
			W	55	55	28	28	55	55	28	28
Short-circuit protection	By gG, BS fuses. Maximum rating or GB2 circuit breaker		A	3				3			
Connection by cable or lug-clamps											
Flexible cable without cable end	1 or 2 conductors	Min.	mm²	1 x 0.75				1 x 1			
		Max.	mm²	2 x 2.5				2 x 2.5			
Flexible cable with cable end	1 or 2 conductors	Min.	mm²	1 x 0.34				1 x 1			
		Max.	mm²	1 x 1.5 + 1 x 2.5				2 x 2.5			
External Ø of lugs			mm	7				7			
Ø of screw			mm	M3				M3.5			
Tightening torque			N.m	0.6…1.2				0.8...1.7			

Electrical characteristics of power circuit

Relay type				LR97D015●● to LR97D25●●	LR97D38●●	LT47●●●●●
Setting range	Depending on model		A	0.3…38		0.5…60
Tripping class				Adjustable		Adjustable
Rated insulation voltage (Ui)	Conforming to IEC 60947-4-1		V	690		690
	Conforming to UL, CSA		V	600		600
Rated impulse withstand voltage (Uimp)			kV	6		6
Frequency limits	Of the operating current		Hz	50…60		50…60
Connection by cable or lug-clamps						
Flexible cable without cable end	1 conductor	Min.	mm²	1.5	2.5	–
		Max.		10	10	–
Flexible cable with cable end	1 conductor	Min.	mm²	1	1	–
		Max.		4	6	–
External Ø of lugs			mm	10	12	–
Ø of screw			mm	M4	M4	–
Tightening torque			N.m	2	2	–

Operating characteristics

Relay type				LR97D●●●●●		LT47●●●●S		LT47●●●●A
Adjustment	Current		A	"Load" knob		"Load" knob		"Load" knob
	Time	D-time knob	s	0.5…30		0.5…30		–
		O-time knob	s	0.2/0.3…10		0.2/0.3…10		0.2/0.3…30
		R-time knob	s	–		–		1…120
Reset	Manual			Reset button		Reset button		Reset button
	Automatic			120 s fixed		–		R-time knob: 1-120 s
	Electrical			By interruption of power supply (minimum 0.1 s)		By interruption of power supply (minimum 0.1 s)		By interruption of power supply (minimum 0.1 s)
Protection functions				**On starting**	**Steady state**	**On starting**	**Steady state**	–
Overload $I_{max} > I_{setting}$	Tripping			Inhibited during D-time	After O-time	Inhibited during D-time	After O-time	After O-time
Locked rotor, mechanical jamming $I > 3 \times I_{setting}$	Tripping			After D-time	< 0.5 s	Inhibited during D-time	After O-time	After O-time
Sensitivity to phase failure	Tripping			< 3 s	< 3 s	Inhibited during D-time	After O-time	After O-time
Status and fault signalling (see table page 24517/2)				2 LEDs		2 LEDs		2 LEDs
TEST/STOP function	Test			No load		No load		No load
	Stop			Under load		Under load		Under load
Sealing				Yes		Yes		Yes

References:
page B11/15

Dimensions, mounting:
page B11/48

Schemes:
page B11/48

Dimensions, mounting, schemes

Dimensions

LR97D●●●●

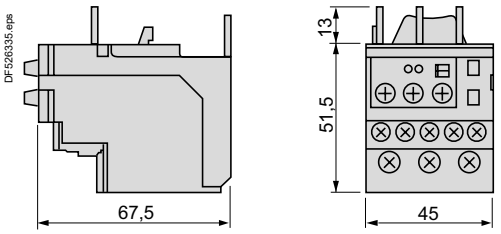

LT47●●●●

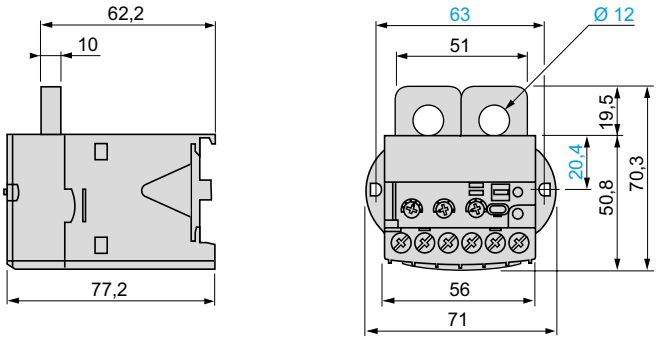

Mounting

LR97D●●●●

Direct mounting beneath the contactor

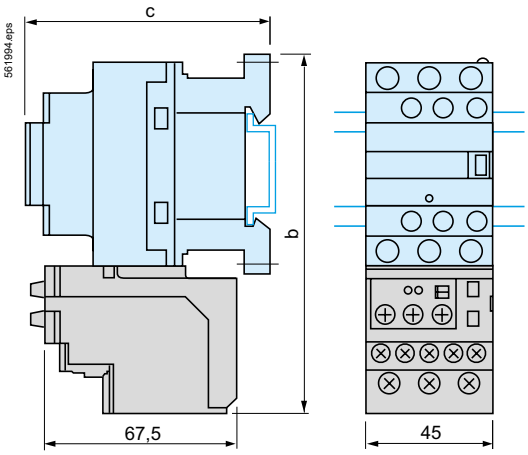

LC1	D09…D18	D25…D38
b	123	137
c	See pages B8/76 and B8/77	

LT47●●●●

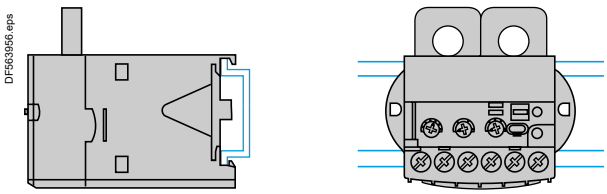

Note: Can be mounted on ⊔ rail.

Schemes

LR97D●●●●

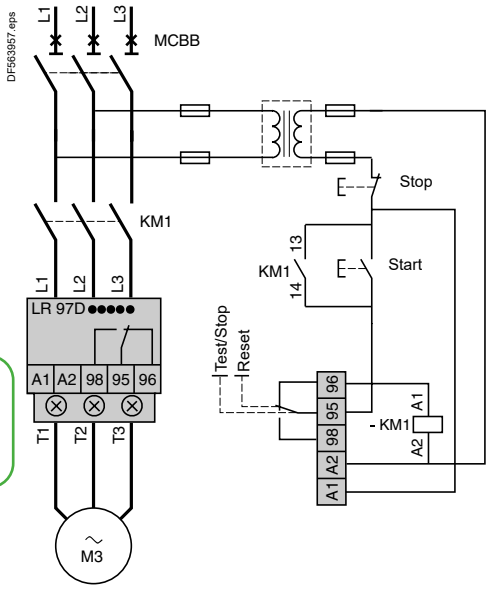

LT47●●●●

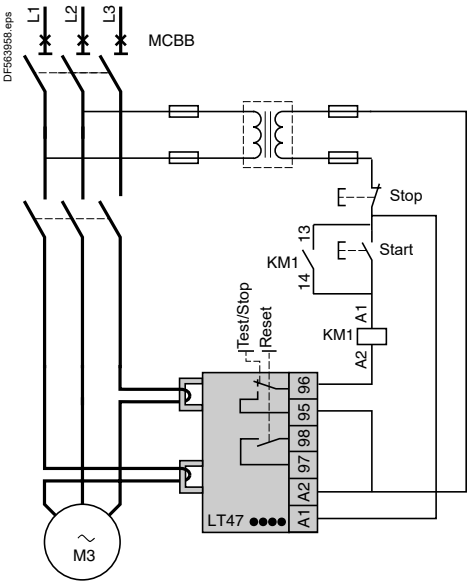

References:
page B11/15

Characteristics:
pages B11/44 to B11/47

Life Is On Schneider Electric

Part C

COMPONENTS
FOR ADVANCED SOLUTIONS

TeSys Active
T motor management system

C1/1

Motor management devices

TeSys Active
Island motor starters

C2/1

Control and monitoring island

This PDF Catalog is updated twice a year. Please check on the link below that you are using the last version.
Ref. MKTED210011EN

TeSys Active
T Motor management system

TeSys T Motor management system		
TeSys T Motor management controllers with Modbus, or CANopen, Devicenet, PROFIBUS, Ethernet TCP/IP communication port		C1/2
Extension modules for TeSys T Motor management system		C1/3
HMI terminal and cables		C1/3
Accessories		C1/4
Coordination tables: ■ fuses (NFC, DIN type aM) + contactor + TeSys T + current transformers ■ magnetic circuit breaker + contactor + TeSys T + current transformers		C1/6

Technical Data for Designers C1/13

Product references

PB121434.eps

LTMR08MBD

PB121440.eps

LTMR08CBD

PB121441.eps

LTMR08DBD

PB121442.eps

LTMR08PBD

PB121443.eps

LTMR08EBD

Controllers

Setting range	Control voltage	Current range	Reference
A	V	A	
For Modbus			
8	⎓ 24	0.4...8	**LTMR08MBD**
	∼ 100...240	0.4...8	**LTMR08MFM**
27	⎓ 24	1.35...27	**LTMR27MBD**
	∼ 100...240	1.35...27	**LTMR27MFM**
100	⎓ 24	5...100	**LTMR100MBD**
	∼ 100...240	5...100	**LTMR100MFM**
For CANopen			
8	⎓ 24	0.4...8	**LTMR08CBD**
	∼ 100...240	0.4...8	**LTMR08CFM**
27	⎓ 24	1.35...27	**LTMR27CBD**
	∼ 100...240	1.35...27	**LTMR27CFM**
100	⎓ 24	5...100	**LTMR100CBD**
	∼ 100...240	5...100	**LTMR100CFM**
For DeviceNet			
8	⎓ 24	0.4...8	**LTMR08DBD**
	∼ 100...240	0.4...8	**LTMR08DFM**
27	⎓ 24	1.35...27	**LTMR27DBD**
	∼ 100...240	1.35...27	**LTMR27DFM**
100	⎓ 24	5...100	**LTMR100DBD**
	∼ 100...240	5...100	**LTMR100DFM**
For PROFIBUS DP			
8	⎓ 24	0.4...8	**LTMR08PBD**
	∼ 100...240	0.4...8	**LTMR08PFM**
27	⎓ 24	1.35...27	**LTMR27PBD**
	∼ 100...240	1.35...27	**LTMR27PFM**
100	⎓ 24	5...100	**LTMR100PBD**
	∼ 100...240	5...100	**LTMR100PFM**
For Ethernet TCP/IP (communication protocols: Modbus/TCP and EtherNet/IP)			
8	⎓ 24	0.4...8	**LTMR08EBD**
	∼ 100...240	0.4...8	**LTMR08EFM**
27	⎓ 24	1.35...27	**LTMR27EBD**
	∼ 100...240	1.35...27	**LTMR27EFM**
100	⎓ 24	5...100	**LTMR100EBD**
	∼ 100...240	5...100	**LTMR100EFM**

Filter

Control voltage	Current max	Reference
V	mA	
∼ 150...240	130	**LTM9F**

Characteristics:
pages C1/14 to C1/28

Curves:
page C1/29

Dimensions, mounting:
pages C1/30 to C1/31

Schemes:
pages C1/32 to C1/35

Life Is On Schneider Electric

Product references

LTMEV40BD

LTMCC004

LTMCUF

Extension modules (with voltage measurement on the 3 phases)

Input control voltage	Number of inputs	Supply to the electronics	Reference
V			
⎓ 24	4	Via the controller	**LTMEV40BD**
∿ 100…240	4	Via the controller	**LTMEV40FM**

HMI terminals

Description		Supply Voltage	Reference
Operator control unit	Languages: English French Spanish	Supply via the controller	**LTMCU**
Operator control unit with Fast Device Replacement Service (FDR)	Languages: English French Spanish	Supply via the controller	**LTMCUF**

Description	Number and type of connectors	Length m	Reference
Connecting cables for the LTM CU control unit	2 x RJ45	1	**LTM9CU10**
		3	**LTM9CU30**
Connecting cables for the XBT N410	SUB-D 25-way female RJ45	2.5	**XBTZ938**

Cables

Description	Number and type of connectors	Length m	Reference
Connecting cables For connecting the controller to the extension module	2 x RJ45	0.04	**LTMCC004** (1)
		1	**LTM9CEXP10**

(1) Sold in lots of 6.

Configuration tools

Description	Composition	Reference	Weight kg
Connection cable for PC	USB to RJ45 cable, length 2.5 m	**TCSMCNAM3M002P**	0.200

Current transformers

Operational current		Reference	Weight
Primary	Secondary		
A	A		kg
100	**1**	**LT6CT1001**	0.550
200	**1**	**LT6CT2001**	0.550
400	**1**	**LT6CT4001**	0.550
800	**1**	**LT6CT8001**	0.680

PF526393.eps

LT6CT4001

Earth fault toroids (marketed under the Schneider Electric brand)

Rated operational current Ie	Internal Ø of toroid	Reference	Weight
A	mm		kg
Closed toroids, type A			
65	30	**50437**	0.120
85	50	**50438**	0.200
160	80	**50439**	0.420
250	120	**50440**	0.530
400	200	**50441**	1.320
630	300	**50442**	2.230
Split toroids, type OA			
85	46	**50485**	1.300
250	110	**50486**	3.200

PTC thermistor probes (3)

Description	Nominal Operating Temperature (NOT)	Colour	Unit reference (4)
	°C		
Triple probes	90	Green/green	**DA1TT090**
	110	Brown/brown	**DA1TT110**
	120	Grey/grey	**DA1TT120**
	130	Blue/blue	**DA1TT130**
	140	White/blue	**DA1TT140**
	150	Black/black	**DA1TT150**
	160	Blue/red	**DA1TT160**
	170	White/green	**DA1TT170**

PB121445.eps

DA1TT●●●

(1) The transformers offered for use with Ultra starters are suitable.
Please consult our "Ultra starter-controllers" catalogue
*(2) For use with **LTMR08●●** controllers.*
(3) PTC: Positive Temperature Coefficient.
(4) Sold in lots of 10.

Characteristics: pages C1/14 to C1/28
Curves: page C1/29
Dimensions, mounting: pages C1/30 to C1/31
Schemes: pages C1/32 to C1/35

Life Is On Schneider Electric

Marking accessories (to be ordered separately)

Description	Composition	Height mm	Unit reference	Weight kg
Clip-in markers	Strips of 10 identical numbers (0 to 9) or capital letters (A to Z)	**5**	**NSYTRABF5●** (1)	0.002
		6	**NSYTRABF6●** (1)	0.002

Connection accessories

Description		Length m	Reference	Weight kg
For Modbus connection				
Cables fitted with 2 x RJ45 connectors		0.3	**VW3A8306R03**	0.045
		1	**VW3A8306R10**	0.065
		3	**VW3A8306R30**	0.125
T-junctions		0.3	**VW3A8306TF03**	0.032
		1	**VW3A8306TF10**	0.032
RS 485 line terminator		–	**VW3A8306R**	0.012
For CANopen connection				
Cables		50	**TSXCANCA50**	4.930
		100	**TSXCANCA100**	8.800
		300	**TSXCANCA300**	24.560
IP20 connectors SUB-D 9-way female Line end adapter switch	Elbowed (90°)	–	**TSXCANKCDF90T**	0.046
	Straight	–	**TSXCANKCDF180T**	0.049
	Elbowed (90°) with SUB-D 9-way connector for connection to PC or diagnostic tool	–	**TSXCANKCDF90TP**	0.051
For DeviceNet connection				
Cables		50	**TSXCANCA50**	4.930
		100	**TSXCANCA100**	8.800
		300	**TSXCANCA300**	24.560
For PROFIBUS DP connection (2)				
Cables		100	**TSXPBSCA100**	–
		400	**TSXPBSCA400**	–
Connectors	With line terminator	–	**490NAD91103**	–
	Without line terminator	–	**490NAD91104**	–
	With line terminator and terminal port	–	**490NAD91105**	–
For Ethernet TCP/IP connection				
Shielded twisted pair cables to standard EIA/TIA568				
Cables fitted with 2 x RJ45 connectors for connection to terminal equipment	Straight	2	**490NTW00002**	–
		5	**490NTW00005**	–
		12	**490NTW00012**	–
		40	**490NTW00040**	–
		80	**490NTW00080**	–
Shielded twisted pair cables, UL and CSA 22.1 approved				
Cables fitted with 2 x RJ45 connectors for connection to terminal equipment	Straight	2	**490NTW00002U**	–
		5	**490NTW00005U**	–
		12	**490NTW00012U**	–
Ethernet Connector	Elbowed 180°		**LTM9CE180T** (3)	0.180

(1) When ordering, replace the ● in the reference with the number or letter required.
(2) To order other connectors and cables (UL cables for harsh environments, etc.), please consult our Customer Care Centre.
(3) Sold in packs of 6.

Characteristics: pages C1/14 to C1/28
Curves: page C1/29
Dimensions, mounting: pages C1/30 to C1/31
Schemes: pages C1/32 to C1/35

Coordination: fuses (NFC, DIN type aM) + contactor + TeSys T + current transformers

0.37 to 75 kW at 400/415 V: type 2 coordination

Standard power ratings of 3-phase motors 50/60 Hz in category AC-3e 400/415 V		Switch-disconnector	aM fuses		Contactor	TeSys T controller	External current transformer
P	Ie	Reference (1)	Size	Rating	Reference (2)	Reference	Reference
kW	A			A			
0.37	1.1	**GS1DD**	10 x 38	2	**LC1D09**	**LTMR08●●**	–
0.55	1.5	**GS1DD**	10 x 38	2	**LC1D09**	**LTMR08●●**	–
0.75	1.9	**GS1DD**	10 x 38	4	**LC1D09**	**LTMR08●●**	–
1.1	2.7	**GS1DD**	10 x 38	4	**LC1D09**	**LTMR08●●**	–
1.5	3.6	**GS1DD**	10 x 38	4	**LC1D09**	**LTMR08●●**	–
2.2	4.9	**GS1DD**	10 x 38	6	**LC1D09**	**LTMR08●●**	–
3	6.5	**GS1DD**	10 x 38	8	**LC1D09**	**LTMR27●●**	–
4	8.5	**GS1DD**	10 x 38	10	**LC1D09**	**LTMR27●●**	–
5.5	11.5	**GS1DD**	10 x 38	16	**LC1D12**	**LTMR27●●**	–
7.5	15.5	**GS1DD**	10 x 38	16	**LC1D25**	**LTMR27●●**	–
10	19	**GS●F**	14 x 51	25	**LC1D25**	**LTMR27●●**	–
11	22	**GS●F**	14 x 51	25	**LC1D25**	**LTMR27●●**	–
15	29	**GS●F**	14 x 51	32	**LC1D32**	**LTMR100●●**	–
18.5	35	**GS●F**	14 x 51	40	**LC1D40A**	**LTMR100●●**	–
22	41	**GS●J**	22 x 58	50	**LC1D50A**	**LTMR100●●**	–
30	55	**GS●J**	22 x 58	80	**LC1D65A**	**LTMR100●●**	–
37	66	**GS●J**	22 x 58	100	**LC1D80**	**LTMR100●●**	–
45	80	**GS●J**	22 x 58	100	**LC1D95**	**LTMR100●●**	–
55	97	**GS●KK**	T00	125	**LC1D115**	**LTMR08●●**	**LT6CT2001**
75	132	**GS●L**	T0	160	**LC1D150**	**LTMR08●●**	**LT6CT2001**

(1) GS●: GS1 for direct operator, GS2 for external operator.
(2) For reversing operation, replace the prefix LC1 with LC2.

90 to 355 kW at 400 V: type 2 coordination

Standard power ratings of 3-phase motors 50/60 Hz in category AC-3e			Switch-disconnector	aM fuses		Contactor	TeSys T controller		External current transformer
400 V			Product type	Size	Rating	Product type	Product type (1)	Ir setting (2)	Reference
P	Ie	Iq							
kW	A	kA			A			A	
90	160	80	**GS●N**	1	200	**LC1G185**	**LTMR08●●●**	160	**LUTC2001**
110	195	80	**GS●N**	1	250	**LC1G225**	**LTMR08●●●**	195	**LUTC4001**
132	230	80	**GS●QQ**	2	315	**LC1G265**	**LTMR08●●●**	230	**LUTC4001**
160	280	80	**GS●QQ**	2	400	**LC1G330**	**LTMR08●●●**	280	**LUTC4001**
200	350	80	**GS2S**	3	500	**LC1G400**	**LTMR08●●●**	350	**LUTC8001**
250	430	80	**GS2S**	3	500	**LC1G500**	**LTMR0●●●**	430	**LUTC8001**
315	540	80	**GS2S**	3	630	**LC1G630**	**LTMR08●●●**	540	**LUTC8001**
355	610	80	**GS2V**	4	800	**LC1G630**	**LTMR08●●●**	610	**LUTC8001**

(1) Please refer to C1/2 to select the complete reference for TeSys T *motor management controller.*
(2) This setting is a general guidance, Ir should be adjusted according to motor characteristics and conditions of use.

Characteristics: pages C1/14 to C1/28
Curves: page C1/29
Dimensions, mounting: pages C1/30 to C1/31
Schemes: pages C1/32 to C1/35

Life Is On Schneider Electric

Coordination: magnetic circuit breaker + contactor + TeSys T + current transformers

0.06 to 75 kW at 400/415 V: type 2 coordination

Standard power ratings of 3-phase motors 50/60 Hz in category AC-3e 400/415 V			Limiter block	Circuit breaker	Contactor	TeSys T controller	External current transformer
P	Ie	Iq	Reference	Reference	Reference	Reference	Reference
kW	A	kA					
0.06	0.2	130	–	**GV2L03**	**LC1D09**	**LTMR08●●**	–
0.09	0.3	130	–	**GV2L03**	**LC1D09**	**LTMR08●●**	–
0.12	0.44	130	–	**GV2L04**	**LC1D09**	**LTMR08●●**	–
0.18	0.6	130	–	**GV2L05**	**LC1D09**	**LTMR08●●**	–
0.25	0.85	130	–	**GV2L05**	**LC1D09**	**LTMR08●●**	–
0.37	1.1	130	–	**GV2L06**	**LC1D09**	**LTMR08●●**	–
0.4	1.1	130	–	**GV2L07**	**LC1D09**	**LTMR08●●**	–
0.55	1.5	130	–	**GV2L06**	**LC1D09**	**LTMR08●●**	–
0.6	1.5	130	–	**GV2L06**	**LC1D09**	**LTMR08●●**	–
0.75	1.9	130	–	**GV2L07**	**LC1D09**	**LTMR08●●**	–
0.8	1.9	130	–	**GV2L07**	**LC1D09**	**LTMR08●●**	–
1.1	2.7	130	–	**GV2L08**	**LC1D18**	**LTMR08●●**	–
1.5	3.6	130	–	**GV2L08**	**LC1D18**	**LTMR08●●**	–
2.2	4.9	130	–	**GV2L10**	**LC1D18**	**LTMR08●●**	–
3	6.5	130	–	**GV2L14**	**LC1D18**	**LTMR08●●**	–
4	8.5	130	–	**GV2L14**	**LC1D18**	**LTMR27●●**	–
5.5	11.5	130	–	**GV2L16**	**LC1D25**	**LTMR27●●**	–
7.5	15.5	50	–	**GV2L20**	**LC1D25**	**LTMR27●●**	–
9	18.1	50	–	**GV2L22**	**LC1D25**	**LTMR27●●**	–
11	22	50	–	**GV2L22**	**LC1D25**	**LTMR27●●**	–
15	29	50	–	**GV3L32**	**LC1D40A**	**LTMR100●●**	–
7.5	15.5	85	**GV1L3**	**GV2L20**	**LC1D25**	**LTMR27●●**	–
9	18.1	85	**GV1L3**	**GV2L22**	**LC1D25**	**LTMR27●●**	–
11	22	85	**GV1L3**	**GV2L22**	**LC1D25**	**LTMR27●●**	–
15	29	85	**GV1L3**	**GV2L32**	**LC1D40A**	**LTMR100●●**	–
18.5	35	50	–	**GV3L40**	**LC1D50A**	**LTMR100●●**	–
22	41	50	–	**GV3L50**	**LC1D50A**	**LTMR100●●**	–
30	55	50	–	**GV3L65**	**LC1D65A**	**LTMR100●●**	–
37	66	70	–	**GV4LE80S**	**LC1D80**	**LTMR100●●**	–
45	80	70	–	**NSX100HMA**	**LC1D115**	**LTMR100●●**	–

Characteristics: pages C1/14 to C1/28
Curves: page C1/29
Dimensions, mounting: pages C1/30 to C1/31
Schemes: pages C1/32 to C1/35

Coordination: magnetic circuit breaker + contactor + TeSys T + current transformers

0.06 to 75 kW at 400/415 V: type 2 coordination

Standard power ratings of 3-phase motors 50/60 Hz in category AC-3e 400/415 V			Circuit breaker	Contactor	TeSys T controller	External current transformer
P	Ie	Iq	Reference	Reference	Reference	Reference
kW	A	kA				
55	97	50	**NSX160NMA**	**LC1D115**	**LTMR08●●**	**LT6CT2001**
55	97	70	**NSX160HMA**	**LC1D115**	**LTMR08●●**	**LT6CT2001**
75	132	50	**NSX250NMA**	**LC1D150**	**LTMR08●●**	**LT6CT2001**
75	132	70	**NSX250NMA**	**LC1D150**	**LTMR08●●**	**LT6CT2001**

90 to 335 kW at 400 V: type 2 coordination

Standard power ratings of 3-phase motors 50/60 Hz in category AC-3e			Circuit breaker		Contactor	TeSys T controller		External current transformer
400 V			Product type (1)	Irm (2)	Product type	Product type (3)	Ir setting (2)	Reference
P	Ie	Iq						
kW	A	kA		A			A	
90	160	130	**NSX250● + MA**	2200	**LC1G185**	**LTMR08●●**	160	**LUTC2001**
110	195	130	**NSX400● + MicroLogic 1.3 M**	2640	**LC1G225**	**LTMR08●●**	195	**LUTC2001**
132	230	130	**NSX400● + MicroLogic 1.3 M**	3200	**LC1G265**	**LTMR08●●**	230	**LUTC4001**
160	280	130	**NSX630● + MicroLogic 1.3 M**	3840	**LC1G330**	**LTMR08●●**	280	**LUTC4001**
200	350	130	**NSX630● + MicroLogic 1.3 M**	5000	**LC1G400**	**LTMR08●●**	350	**LUTC4001**
220	380	130	**NSX630● + MicroLogic 1.3 M**	5500	**LC1G500**	**LTMR08●●**	388	**LUTC4001**
250	430	130	**NS800L + MicroLogic 5.0 LR OFF**	6000	**LC1G500**	**LTMR08●●**	430	**LUTC8001**
300	460	130	**NS800L + MicroLogic 5.0 LR OFF**	8800	**LC1G630**	**LTMR08●●**	460	**LUTC8001**
335	575	130	**NS800L + MicroLogic 5.0 LR OFF**	9600	**LC1G630**	**LTMR08●●**	575	**LUTC8001**

(1) Product type to be completed by replacing the ● with the breaking performance code:

Rated conditional short-circuit (kA)	NSX250●/ NSX400●/ NSX630●					NS800●
Breaking performance code	**F**	**N**	**H**	**S**	**L**	**L**
400 V	36	50	70	100	130	150

(2) This setting is a general guidance, Ir and Irm should be adjusted according to motor characteristics and conditions of use.
(3) Please refer to C1/2 to select the complete reference for TeSys T *motor management controller.*

Substitution table

	Old range LT6P multifunction protection relay			New range T controllers		
Motor current	**Reference**	**Reference**	**External current transformer Reference**	**Reference**	**Reference**	**External current transformer Reference**
	∼ 100…240 V	⎓ 24 V		∼ 100…240 V	⎓ 24 V	
I < 5 A	LT6P0M005FM	LT6P0M005S144	–	**LTMR08●FM**	**LTMR08●BD**	**–**
5 A < I < 25 A	LT6P0M025FM	LT6P0M025S144	–	**LTMR27●FM**	**LTMR27●BD**	**–**
25 A < I < 100 A	LT6P0M005FM	LT6P0M005S144	LT6CT1001	**LTMR100●FM**	**LTMR100●BD**	**–**
100 A < I < 200 A	LT6P0M005FM	LT6P0M005S144	LT6CT2001	**LTMR08●FM**	**LTMR08●BD**	**LT6CT2001**
200 A < I < 400 A	LT6P0M005FM	LT6P0M005S144	LT6CT4001	**LTMR08●FM**	**LTMR08●BD**	**LT6CT4001**
400 A < I < 800 A	LT6P0M005FM	LT6P0M005S144	LT6CT8001	**LTMR08●FM**	**LTMR08●BD**	**LT6CT8001**

Characteristics: pages C1/14 to C1/28
Curves: page C1/29
Dimensions, mounting: pages C1/30 to C1/31
Schemes: pages C1/32 to C1/35

Life Is On Schneider Electric

Coordination: fuses (NFC, DIN type aM) + contactor + TeSys T + current transformers

0.37 to 75 kW at 690 V: type 2 coordination

Standard power ratings of 3-phase motors 50/60 Hz in category AC-3e		Switch-disconnector (1)	aM fuses		Contactor	TeSys T controller	External current tranformer
P	Ie	Reference	Size	Rating	Reference	Reference	Reference
kW	A			A			
0.37	0.64	**GS●F**	14 x 51	1	**LC1D09**	**LTMR08●●**	–
0.55	0.87	**GS●F**	14 x 51	2	**LC1D09**	**LTMR08●●**	–
0.75	1.1	**GS●F**	14 x 51	2	**LC1D09**	**LTMR08●●**	–
1.1	1.6	**GS●F**	14 x 51	2	**LC1D09**	**LTMR08●●**	–
1.5	2.2	**GS●F**	14 x 51	4	**LC1D09**	**LTMR08●●**	–
2.2	2.9	**GS●F**	14 x 51	4	**LC1D09**	**LTMR08●●**	–
3	4	**GS●F**	14 x 51	6	**LC1D09**	**LTMR08●●**	–
4	5	**GS●F**	14 x 51	6	**LC1D09**	**LTMR08●●**	–
5.5	7	**GS●F**	14 x 51	8	**LC1D25**	**LTMR08●●**	–
7.5	9.3	**GS●F**	14 x 51	10	**LC1D25**	**LTMR27●●**	–
11	13	**GS●F**	14 x 51	16	**LC1D25**	**LTMR27●●**	–
15	16.5	**GS●G**	T000	20	**LC1D32**	**LTMR27●●**	–
18.5	21	**GS●G**	T000	25	**LC1D32**	**LTMR27●●**	–
22	25	**GS●G**	T000	32	**LC1D40A**	**LTMR27●●**	–
30	33	**GS●G**	T000	40	**LC1D50A**	**LTMR100●●**	–
37	40	**GS●J**	22 x 58	50	**LC1D65A**	**LTMR100●●**	–
45	49	**GS●J**	22 x 58	63	**LC1D80**	**LTMR100●●**	–
55	58	**GS●J**	22 x 58	80	**LC1D115**	**LTMR100●●**	–
75	77	**GS●KK**	T00	100	**LC1D115**	**LTMR100●●**	–

(1) GS●: GS1 for direct operator, GS2 for external operator.

110 to 400 kW at 690 V: type 2 coordination

Standard power ratings of 3-phase motors 50/60 Hz in category AC-3e			Switch-disconnector	aM fuses		Contactor	TeSys T controller		External current transformer
690 V			Product type	Size	Rating	Product type	Product type (1)	Ir setting (2)	Reference
P	Ie	Iq							
kW	A	kA			A			A	
110	113	80	**GS●KK**	0	125	**LC1G185**	**LTMR08●●●**	113	**LUTC2001**
132	140	80	**GS●L**	0	160	**LC1G265**	**LTMR08●●●**	134	**LUTC2001**
160	165	80	**GS●N**	1	160	**LC1G265**	**LTMR08●●●**	162	**LUTC2001**
200	203	80	**GS●N**	1	200	**LC1G330**	**LTMR08●●●**	203	**LUTC2001**
220	233	80	**GS●QQ**	2	250	**LC1G400**	**LTMR08●●●**	224	**LUTC4001**
250	253	80	**GS●QQ**	2	250	**LC1G400**	**LTMR08●●●**	250	**LUTC4001**
290	292	80	**GS●QQ**	2	315	**LC1G500**	**LTMR08●●●**	292	**LUTC4001**
315	321	80	**GS●QQ**	2	400	**LC1G500**	**LTMR08●●●**	313	**LUTC4001**
355	354	80	**GS2S**	3	500	**LC1G630**	**LTMR08●●●**	354	**LUTC4001**
400	390	80	**GS2S**	3	630	**LC1G630**	**LTMR08●●●**	400	**LUTC8001**

(1) Please refer to C1/2 to select the complete reference for TeSys T *motor management controller.*
(2) This setting is a general guidance, Ir and Irm should be adjusted according to motor characteristics and conditions of use.

Characteristics: pages C1/14 to C1/28
Curves: page C1/29
Dimensions, mounting: pages C1/30 to C1/31
Schemes: pages C1/32 to C1/35

Coordination: magnetic circuit breaker + contactor + TeSys T + current transformers

½ to 20 HP at 480 V - 3P

Standard power ratings 480 V			Limiter block	Circuit breaker	Contactor	TeSys T controller	External current transformer
P	Ie	Iq	Reference	Reference	Reference	Reference	Reference
HP	A	kA					
–	0.49	100	–	GV2L04	LC1D09	LTMR08●●	–
–	0.64	100	–	GV2L05	LC1D09	LTMR08●●	–
–	0.87	100	–	GV2L05	LC1D09	LTMR08●●	–
0.5	1.1	100	–	GV2L06	LC1D09	LTMR08●●	–
0.75	1.6	100	–	GV2L06	LC1D25	LTMR08●●	–
1	2.1	65	GV1L3	GV2L07	LC1D25	LTMR08●●	–
1.5	3	65	GV1L3	GV2L08	LC1D25	LTMR08●●	–
2	3.4	65	GV1L3	GV2L08	LC1D25	LTMR08●●	–
3	4.8	65	GV1L3	GV2L10	LC1D25	LTMR08●●	–
5	7.6	65	GV1L3	GV2L14	LC1D25	LTMR08●●	–
7.5	11	65	GV1L3	GV2L16	LC1D25	LTMR27●●	–
10	14	65	GV1L3	GV2L16	LC1D25	LTMR27●●	–
10	14	100	LA9LB920	GV2L16	LC1D25	LTMR27●●	–
15	21	65	GV1L3	GV2L22	LC1D32	LTMR27●●	–
15	21	100	LA9LB920	GV2L22	LC1D32	LTMR27●●	–
20	27	65	GV1L3	GV2L32	LC1D40A	LTMR100●●	–
20	27	100	LA9LB920	GV2L32	LC1D40A	LTMR100●●	–

0.25 to 22 kW at 690 V: type 2 coordination

Standard power ratings of 3-phase motors 50/60 Hz in category AC-3e 690 V			Limiter block	Circuit breaker	Contactor	TeSys T controller	External current transformer
P	Ie	Iq	Reference	Reference	Reference	Reference	Reference
kW	A	kA					
0.25	0.49	100	–	GV2L04	LC1D09	LTMR08●●	–
0.37	0.64	100	–	GV2L05	LC1D09	LTMR08●●	–
0.55	0.87	100	–	GV2L05	LC1D09	LTMR08●●	–
0.75	1.1	100	–	GV2L06	LC1D09	LTMR08●●	–
1.1	1.6	100	–	GV2L06	LC1D25	LTMR08●●	–
1.5	2.1	65	LA9LB920	GV2L07	LC1D25	LTMR08●●	–
2.2	2.8	65	LA9LB920	GV2L08	LC1D25	LTMR08●●	–
3	3.8	65	LA9LB920	GV2L08	LC1D25	LTMR08●●	–
4	4.9	65	LA9LB920	GV2L10	LC1D25	LTMR08●●	–
5.5	6.7	65	LA9LB920	GV2L14	LC1D25	LTMR08●●	–
7.5	8.9	65	LA9LB920	GV2L14	LC1D25	LTMR27●●	–
9	10.6	65	LA9LB920	GV2L16	LC1D25	LTMR27●●	–
11	12.8	65	LA9LB920	GV2L16	LC1D25	LTMR27●●	–
15	17	65	LA9LB920	GV2L20	LC1D32	LTMR27●●	–
18.5	21	65	LA9LB920	GV2L22	LC1D32	LTMR27●●	–
22	24	65	LA9LB920	GV2L32	LC1D40A	LTMR100●●	–

Characteristics: pages C1/14 to C1/28
Curves: page C1/29
Dimensions, mounting: pages C1/30 to C1/31
Schemes: pages C1/32 to C1/35

Life Is On Schneider Electric

Product references

50437	LTMR100CFM
50438	LTMR100DBD
50439	LTMR100DFM
50440	LTMR100EBD
50441	LTMR100EFM
50442	LTMR100MBD
50485	LTMR100MFM
50486	LTMR100PBD
490NAD91103	LTMR100PFM
490NAD91104	LTMR27CBD
490NAD91105	LTMR27CFM
490NTW00012U	LTMR27DBD
DA1TT090	LTMR27DFM
DA1TT110	LTMR27EBD
DA1TT120	LTMR27EFM
DA1TT130	LTMR27MBD
DA1TT140	LTMR27MFM
DA1TT150	LTMR27PBD
DA1TT160	LTMR27PFM
DA1TT170	TSXCANCA100
LT6CT1001	TSXCANCA300
LT6CT2001	TSXCANCA50
LT6CT4001	TSXCANKCDF180T
LT6CT8001	TSXCANKCDF90T
LTM9BPS	TSXCANKCDF90TP
LTM9CE180T	TSXPBSCA100
LTM9CEXP10	TSXPBSCA400
LTM9CU10	VW3A8306R
LTM9CU30	VW3A8306R03
LTM9F	VW3A8306R10
LTM9KCU	VW3A8306R30
LTMCU	VW3A8306TF03
LTMCUF	VW3A8306TF10
LTMEV40BD	XBTZ938
LTMEV40FM	
LTMR08CBD	
LTMR08CFM	
LTMR08DBD	
LTMR08DFM	
LTMR08EBD	
LTMR08EFM	
LTMR08MBD	
LTMR08MFM	
LTMR08PBD	
LTMR08PFM	
LTMR100CBD	

This document is current. Click on the product reference to get the most recent availability status (hyperlink to **se.com** product datasheet).
If your product variant is no longer available, please consult your distributor or regional sales office.

Life Is On Schneider Electric

Technical Data for Designers

Contents

T Motor management system:
> characteristics ..... C1/14 to C1/28
> curves C1/29
> dimensions ..... C1/30 to C1/31
> schemes ..... C1/32 to C1/35

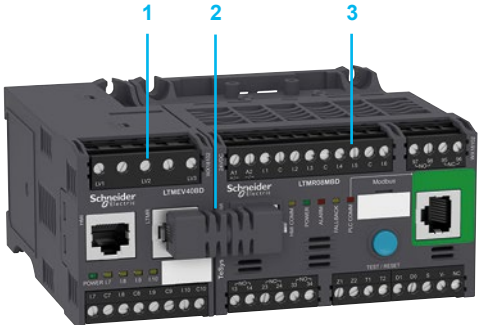

1 LTMEV40BD extension module
2 LTMCC004 2 x RJ45 jumper
3 LTMR08MBD controller

Introduction

TeSys T is a motor management system that provides protection, metering and monitoring functions for single-phase and 3-phase, constant speed, a.c. motors up to 810 A.

Suitable for the harshest applications, this product range offers:
- high-performance multifunction protection, independent of the automation system
- a local HMI control unit for reading, displaying and modifying the parameters monitored, diagnostics, etc.
- configuration using SoMove software
- connection to the automation system via a communication network (selection according to various protocols).

Application

The TeSys T motor management system is used for motor control and protection in harsh industrial applications, in which downtime must be avoided because it is very costly: Oil & Gas, chemical industry, water treatment, metal, minerals and mining, pharmaceutical industry, microelectronics, tunnels, airports etc.

With TeSys T motor management system, unexpected stops of a process or manufacturing, associated with a motor, are anticipated via predictive analysis of fault situations. Fault tripping is therefore reduced to a minimum.

Its use in motor control panels makes it possible to:
- increase the operational availability of installations
- improve flexibility from project design through to implementation
- increase productivity by making available all information needed to run the system.

The motor management system integrates perfectly with Schneider Electric low voltage equipment, such as Okken, Blokset and Prisma.

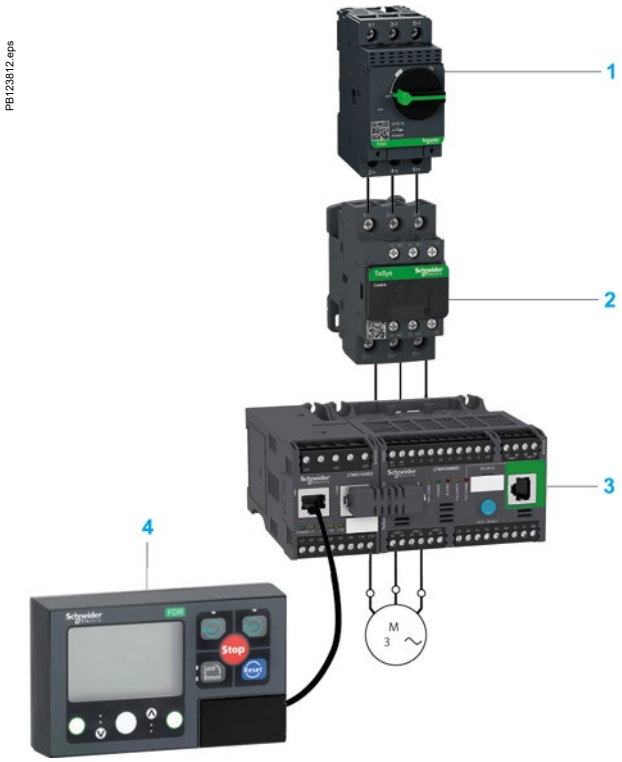

1 Magnetic Circuit breaker
2 Contactor
3 Controller with extension module
4 Operator control unit

References:
pages C1/2 to C1/9
Curves:
page C1/29
Dimensions, mounting:
pages C1/30 to C1/31
Schemes:
pages C1/32 to C1/35

PB121434.eps

LTMR08MBD

PB121436.eps

LTMEV40BD

PB112374.eps

LTMCUF

Introduction

Composition of the motor management system

The system comprises:
- ■ an LTMR motor management controller
  - □ with internal current transformer up to 100 A
  - □ above 100 A, by external current transformer up to 810 A
- ■ an LTME extension module
- ■ an LTMCU operator control unit
- ■ configuration software incorporated in the SoMove software application
- ■ accessories for system set-up.

Communication

The LTMR controller is equipped with a communication interface to allow remote monitoring and control of the motor. All motor information is then available at automation system level.

The following networks are available:
- ■ Modbus, CANopen, DeviceNet, PROFIBUS DP and Ethernet TCP/IP (with two communication protocols, Modbus/TCP and EtherNet/IP).

T system functions

Protection functions

- ■ against thermal overload
- ■ against phase imbalance and phase failure
- ■ thermal motor protection via PTC probes
- ■ against phase reversal
- ■ against earth faults
- ■ against long starting times and motor stalling
- ■ against automatic load shedding and restarting
- ■ against load fluctuations (I, U, P)
- ■ against variations of Cos φ (power factor).

Metering functions

- ■ Measurements (rms values):
  - □ current on the 3 phases
  - □ voltage on the 3 phases (shedding)
  - □ motor temperature
  - □ earth fault.
- ■ Values calculated:
  - □ average current
  - □ frequency
  - □ Cos φ (power factor), power, power consumption...

Motor control functions

A motor managed by TeSys T motor management system can be controlled:
- ■ locally, using the logic inputs present on the product, or via the HMI terminal
- ■ remotely, via the network (connection by terminal block or connector except for DeviceNet: terminal block only).

Motor control modes

5 predefined motor control modes are incorporated in the controller:
- ■ overload mode: monitoring of motors whose control is not managed by the controller,
- ■ independent mode: starting of non-reversing motors,
- ■ reverser mode: starting of reversing motors,
- ■ 2-step mode: 2-step starting of motors (star-delta, by autotransformer and by resistor),
- ■ 2-speed mode: 2-speed starting of motors (Dahlander, pole changer).

A 6th "Custom" mode is available to allow the user to create a specific motor control mode that is not predefined in the controller.

Statistical and diagnostic functions

- ■ Fault statistics: counters per type of protection and history of the last 5 faults.
- ■ Motor statistics: saving of motor statistics values.
- ■ Diagnosis of faults affecting correct operation of the product.

References: pages C1/2 to C1/9
Curves: page C1/29
Dimensions, mounting: pages C1/30 to C1/31
Schemes: pages C1/32 to C1/35

PB121447.eps

LTMR●●

Controller ref. LTMR

The controller is the central component in the motor management system.
It manages the basic functions such as:
- measurement of 3-phase current via integral current transformers from 0.4 to 100 A (up to 810 A by external current transformers)
- measurement of earth current by external earth fault toroid
- measurement of motor temperature by PTC probe
- inputs and outputs for the various motor control modes, fault management and associated functions.

Characteristics

Supply
2 types of controller power supply are available:
- 24 V⎓
- 100…240 V∿.

Current ranges
3 current ranges allow measurement of motor current from 0.4 to 100 A:
- 0.4…8 A
- 1.35…27 A
- 5…100 A.

For use with external current transformers, choose the 0.4…8 A range (1 or 5 A current transformer secondary).

Inputs
- 6 discrete logic inputs.

Outputs
- 3 relay logic outputs (1N/O).
- 1 relay output for fault signalling (1N/O + 1N/C).

Measurements
- Connections for a temperature probe.
- Connections for an earth fault toroid.

Extension module ref. LTME

The extension module adds the following functionalities to the T controller:
- voltage measurement on the 3 phases. This enables it to calculate numerous engine monitoring parameters (power, frequency, Cos φ…)
- 4 additional inputs.

Characteristics

Inputs
- 4 discrete logic inputs (independent).

Power supplies
- 2 types of power supply for the inputs: 24 V⎓ and 100…240 V∿.
  - A 24 V⎓ expansion module can be assembled with a 24 V⎓ controller or with a 100…240 V∿ controller.
  - A 100…240 V∿ expansion module can be assembled with a 100…240 V∿ controller.

Voltage measurement between phases up to 690 V nominal.

PB121448.eps

LTMCU

Human/Machine Interfaces (HMI)

Depending on the application, 2 types of HMI can be used with the LTMR controller.
■ The LTMCU operator control unit:
□ entirely dedicated to the T range
□ only for control/monitoring of an LTMR controller.
■ A Magelis XBTN410 terminal for control/monitoring of 1 to 8 LTMR controllers.

Operator control unit ref. LTMCU

Dedicated exclusively to T controllers, control unit LTMCU makes it possible to:
■ configure the parameters of the LTMR controller
■ display information on controller configuration and operation
■ monitor the alarms and faults generated by the controller
■ local control of the motor via the local control interface (keys can be customised). Three different languages can be loaded into the LTMCU controller at the same time.
By default, these 3 languages are:
■ LTMCU: English, French and Spanish
Note: *English is the only compulsory language.*

A language download utility (LangTool), together with all the other languages, are available on the website “www.se.com”.
This tool allows the languages present in the LTMCU control unit to be adapted.

The LTMCU HMI control unit has an RJ45 port, protected by a flexible cover to provide a good level of protection (IP54).
This port on the front panel allows connection to a PC, via a connecting cable, in order to use SoMove software.
In this case, the control unit acts as a transmitter and all information can then be viewed in SoMove.
The LTMCU HMI can be used as a portable version by using the separate kit LTM9KCU. This kit consists of two snap-on plastic shells (tool-free mounting) fitted with a simple fixing system that uses magnets for mounting on all types of metal surfaces.

The Magelis XBT N410 HMI terminal

Two applications have been predefined for T motor management system.
Depending on the application loaded, the HMI terminal makes it possible to:
■ configure and monitor a motor starter (LTM_1T1_V1.dop)
■ monitor and modify certain parameters on up to 8 motor starters (LTM_1T8_X_V1.dop) (1).

XBTL1000 programming software is needed for loading applications into the HMI terminal.
These applications are available on the website “www.se.com”.

(1) Replace the X with an E for the English version, or an F for the French version.

Controllers ref. LTMR

Modbus

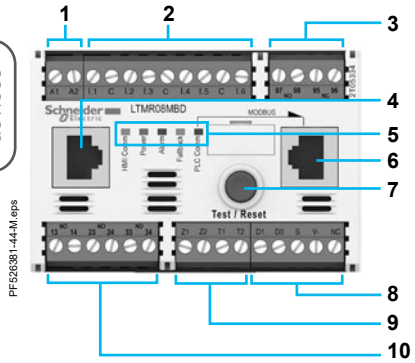

DeviceNet

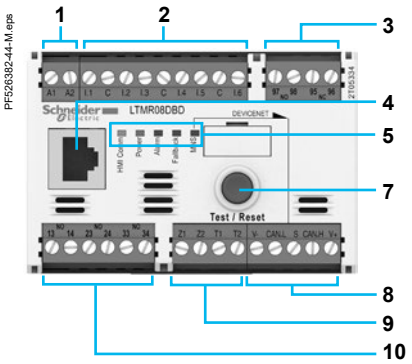

PROFIBUS DP

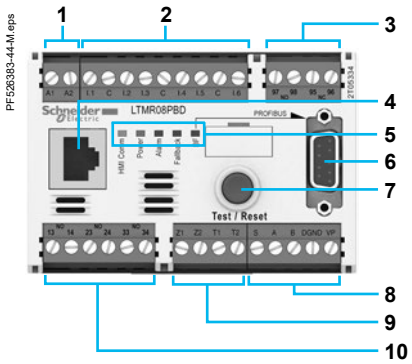

CANopen

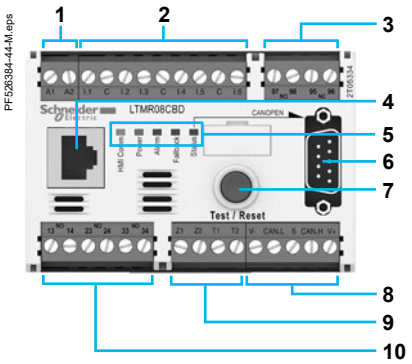

Ethernet TCP/IP (communication protocols: Modbus/TCP and EtherNet/IP)

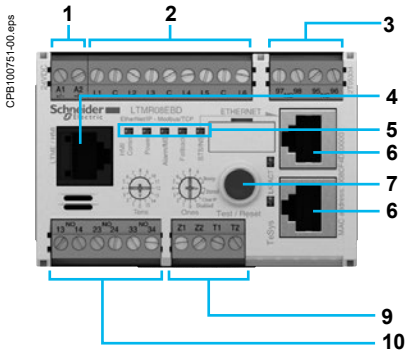

Controllers feature the following on their front panel:

1 Controller power supply.
2 Input connections.
3 Fault outputs (N/O+N/C).
4 Port for connection to the HMI terminal, a PC or an extension module (RJ45).
5 Controller status LEDs.
6 Network port for connection to the network by connector (except DeviceNet) (1).
7 Test/Reset button.
8 Connection to the network by terminal block (except Ethernet TCP/IP).
9 Connection for an earth fault toroid and temperature probes.
10 Outputs for motor control mode function.

(1) Connection using power extension (daisy-chaining) is possible for Ethernet TCP/IP.

Extension modules ref. LTMEV40●●

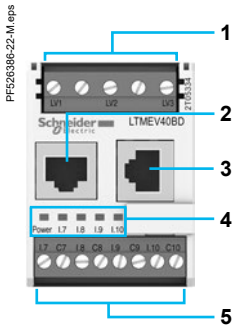

Extension modules have the following on their front face:
1 Inputs for voltage measurement.
2 Port for connection to the HMI terminal or to the PC.
3 Port for connection to the controller.
4 Extension module status LEDs.
5 Connection of additional inputs.

Operator control unit ref. LTMCU

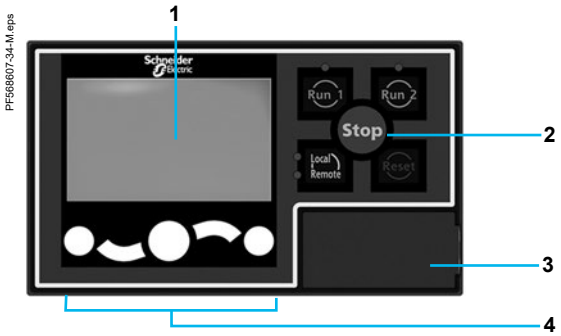

The control unit has the following on its front face:
1 Screen LCD display.
2 Local control interface including control keys and LEDs.
3 RJ45 port on front panel for connection to a PC (protected by a cover).
4 Contextual navigation keys.

References: pages C1/2 to C1/9
Curves: page C1/29
Dimensions, mounting: pages C1/30 to C1/31
Schemes: pages C1/32 to C1/35

Characteristics

Thermal and current protection functions

Functions Description	Setting range	Controller LTMR	Controller and extension module (LTMR + LTME)	Alarm threshold	Fault threshold
Thermal overload: thermal protection of motor by monitoring current consumption	Class: 5, 10, 15, 20, 25, 30. Inverse Thermal/ Definite Time				
Motor temperature: thermal monitoring of the motor using temperature probes (winding, paper...). Up to 3 sensors in series.	PTC binary PTC/NTC analogue: 20 …6500 Ohm				
Phase imbalance: monitors the symmetry of currents. To be used for imbalance < 80 % of the average current (1).	10…70% I average 0.2…20 s				
Phase failure: monitors the symmetry of currents. To be used for imbalance < 80 % of the average current (1).	0.1…30 s				
Phase reversal: signals when the phase sequence is different from the defined sequence (motor running).	A-B-C A-C-B				
Long starting time: monitors the motor starting time	100…800 % of FLC (2) 1…200 s				
Locked rotor: locking detected by a sudden increase in current after the start phase	100…800 % of FLC (2) 1…30 s				
Min/max current load limit variations: monitors motor load through variations of current around preset thresholds.	min.: 30…100 % of FLC (2) 1…200 s max.: 20…800 % of FLC (2) 1…250 s				
Earth fault: signals internal insulation faults, by vectorial summing of external currents, via earth fault toroid.	internal: 50…500 % min FLC (2) 0.5…25 s external: 0.02…21 A 0.1…25 s				
Frequent starting: Protects the motor against overheating due to frequent starting.	0…999.9 s				

Voltage and power protection functions

Phase imbalance: monitors the symmetry of voltage between phases. To be used for imbalance < 40 % of the average voltage (3).	3…15 % 0.2…20 s				
Phase failure: monitors the symmetry of voltage between phases. To be used for imbalance > 40 % of the average voltage (3).	0.1…30 s				
Phase reversal: signals when the phase sequence is different from the defined sequence (motor stopped).	A-B-C A-C-B				
Voltage variations. Min/max voltage limits: monitors voltage variations around preset thresholds.	min.: 70…99 % 0.2…25 s max.: 101…115 % 0.2…25 s				
Load shedding: opens outputs O.1 and O.2 if voltage drops below a preset threshold.	68…115 % 1…9999 s				
Power variations. Min/max power limits: monitors power variations around preset thresholds.	20…800 % 1…100 s				
Variations of Cos φ. Min/max limits of Cos φ: monitors variations of Cos φ around preset thresholds.	0…1 s 1…25 s				

Function performed.

(1) Average current value measured on the 3 phases.
(2) FLC: Full Load Current (setting current).
(3) Average voltage value measured on the 3 phases.

References: pages C1/2 to C1/9
Curves: page C1/29
Dimensions, mounting: pages C1/30 to C1/31
Schemes: pages C1/32 to C1/35

Motor control functions

Functions	Description	With controller LTMR	With controller LTMR and extension module LTME
Control modes	Local, via terminal block	■	■
	Local, via HMI terminal [1]	■	■
	Remote, via network	■	■
Operating modes	Overload	■	■
	Independent	■	■
	Reverser	■	■
	2-step	■	■
	2-speed	■	■
	"Custom" mode	■	■
Fault management	Manual reset	■	■
	Automatic reset	■	■
	Remote reset	■	■

Metering functions and statistics

Functions	Description	Measurement range	With controller LTMR	With controller LTMR and extension module LTME
Measurements [2]	Current/Phase	0.08…1000 A	■	■
	Earth current	0.1633 x CT ratio	■	■
	Average current	0.08…1000 A	■	■
	Current imbalance between phases	0…200 %	■	■
	Thermal capacity level	0…200 %	■	■
	Motor temperature rise	0…6500 Ohm	■	■
	Frequency	0… 100 Hz		■
	Voltage between phases	∼ 0…830 V		■
	Voltage imbalance between phases	0…200 %		■
	Active power	0…6553.5 kW		■
	Reactive power	0…6553.5 kVAR		■
	Cos φ (power factor)	0…100		■
	Active power consumption	0…400 kWh		■
	Reactive power consumption	0…400 kVARh		■
Fault statistics	Protection fault counters		■	■
	Protection alarm counters		■	■
	Diagnostic fault counters		■	■
	Motor control function counters		■	■
	Fault history		■	■
Fault diagnostics	Internal watchdog fault		■	■
	Controller internal temperature		■	■
	Temperature sensor connection		■	■
	Current connection		■	■
	Voltage connection			■
	Motor control commands (start, stop, run check back and stop check back)		■	■
	Control configuration checksum		■	■
	Loss of communication		■	■
Motor statistics	Number of motor control commands (O.1/O.2 starts)		■	■
	Operating time		■	■
	Number of starts/hour		■	■
	Last start I max.		■	■
	Duration of last start		■	■
Thermal overload statistics	Time to trip		■	■
	Time to restart		■	■
System operating statistics	Run, ON, Start, alarm, fault.		■	■

(1) HMI: Human Machine Interface.
(2) See measurement details page C1/26.

Ref.

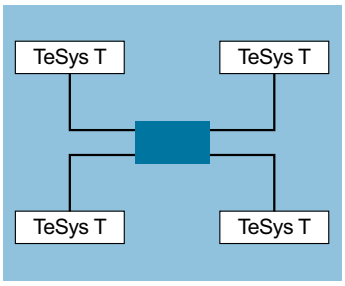

Star topology

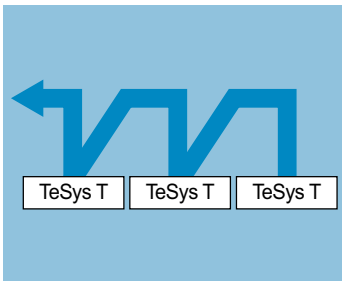

Daisy chain topology

Star topology

In a star topology, all the peripherals are linked via an intermediate peripheral (hub or switch).

In industrial Ethernet applications, the use of full duplex switches (instead of hubs) as central peripherals is strongly recommended.

Daisy chain topology

Daisy chaining, at bus level, is another connection topology commonly used in industrial automation system networks. The cable segments link several peripherals to each other, constituting the peripheral "section" of the network cable.

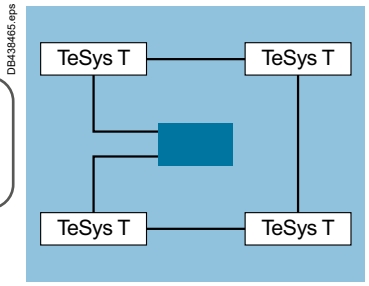

Ring topology

Ethernet: different network topologies

Ring topology

In a ring topology, all the peripherals or components of the network infrastructure are connected within a loop.
This type of topology makes it possible to achieve different levels of redundancy of the network.

Ethernet ring

Ethernet rings are generally the main networks in applications where a high level of reliability is required. If a ring topology is required, the switches handling this function must be used.

Redundancy

Redundancy of the network infrastructure is the key to development of applications with high operational reliability.
Implementing a single or double ring architecture makes it possible to provide protection against breaks in network segments.

Single ring

The first level of redundancy can be achieved by installing a single ring.
ConneXium switches can be used to establish main network ring configurations.
The ring is created using RSTP protocol.
If a section of the line fails, the ring structure converts into a line type configuration.

Ethernet: different communication protocols

LTMR controllers communicating over an Ethernet network can communicate either using the Modbus/TCP communication protocol or using the EtherNet/IP communication protocol. Both protocols are loaded in the controller. One must be selected for the operation.

Note: *EtherNet/IP communication protocol is supported by ODVA, also promoter of DeviceNet communication solution. Note that in EtherNet/IP, IP stands for Industrial Protocol.*

■ IP address Class for Ethernet TCP/IP version: Class A 20 ETH10/100.

Services available on Ethernet TCP/IP version		
	In Modbus/TCP	In Ethernet/IP
Web Server	■	■
Modbus messaging	■	
IO Messaging		■
Explicit Messaging		■
Client FDR	■	■
SNMP network administrator	■	■
RSTP	■	■
Discovery	■	■
Master IP	■	■
Broadcast Storm Protection	■	■

Possible configurations and applications

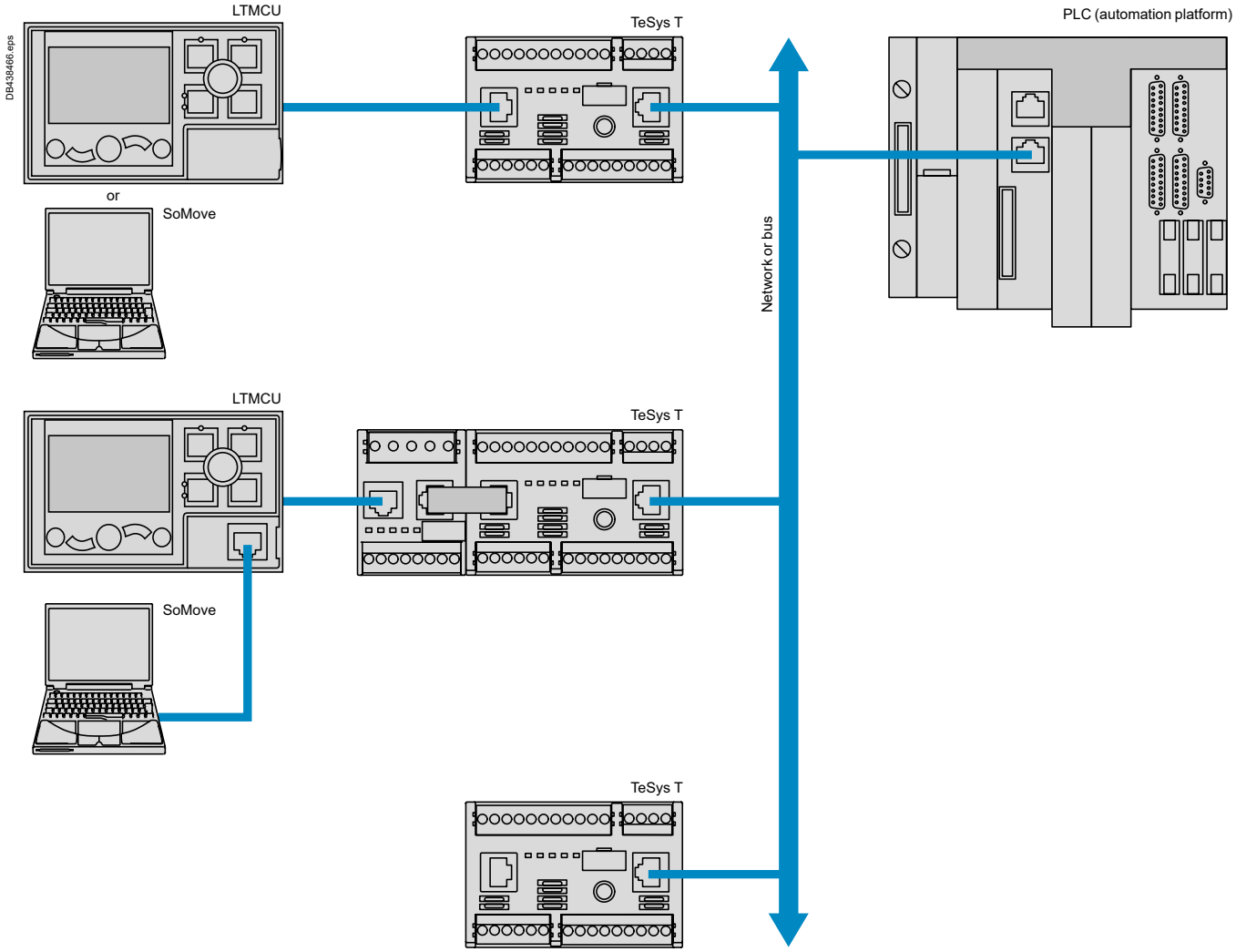

PB113436.eps

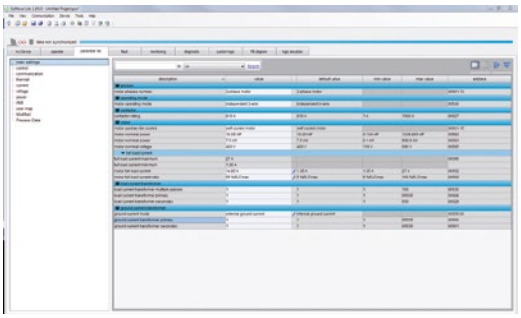

Example of T configurator setup screen

Configuration with SoMove

The T configurator is incorporated in the SoMove software application, as from version 2.5. (1)
It allows configuration, commissioning and maintenance of motor starters protected by TeSys T motor management system.

A library containing predefined motor control mode functions is available in order to:
- allow standardisation
- avoid errors
- reduce motor starter setup times.

5 predefined motor control modes are incorporated in the controller:
- overload mode: monitoring of motors whose control is not managed by the controller
- independent mode: starting of non-reversing motors
- reverser mode: starting of reversing motors
- 2-step mode: 2-step starting of motors (star-delta, by autotransformer and by resistor)
- 2-speed mode: 2-speed starting of motors (Dahlander, pole changer).

By using logic functions, a "Custom" mode makes it possible to:
- easily adapt these predefined motor control mode functions to the specific needs of your applications
- create a link with the motor starter environment or
- create new functions.

The functions thus defined can be saved and used to build your function library for future applications.
To create special functions, a logic editor is incorporated in the configurator and allows a choice of 2 programming languages:
- function block
- structured text.

(1) An update file is available, free of charge, on the website "www.se.com". It will enable you to take advantage of the latest functions in the T motor management system.

Ref.

Environment

Product type			LTMR controllers	LTMEV40●● extension modules
Conforming to standards			IEC/EN 60947-4-1, UL60947-4-1A, CSA 22-2 n°60947-4-1, IACS E10	
Product certifications			UL, CSA, CE, CCC, UKCA, EAC/GOST, RCM/CTIC'K, Atex, Marine (BV, LROS, DNV, RINA, ABS) (1)	
Rated insulation voltage of the outputs (Ui)	Conforming to IEC/EN 60947-1, overvoltage category III, degree of pollution 3	V	690	
	Conforming to UL 508, CSA C222 n° 14	V	690	
Rated impulse withstand voltage (Uimp)	Conforming to IEC/EN 60947-4-1			
	∼ 100…240 V supply, inputs and outputs	kV	4	4
	⎓ 24 V supply, inputs and outputs	kV	0.8	0.8
	Communication circuits	kV	0.8	–
	Current or voltage measurement circuit	kV	6	6
Short-circuit withstand	Conforming to IEC/EN 60947-4-1	kA	100	
Climatic withstand	Conforming to IEC/EN 60068-2-30		12 x 24 hour cycles	
	Conforming to IEC/EN 60070-2-11	h	48	
Ambient air temperature around the device	Storage	°C	- 40…+80	
	Operation	°C	- 20…+60	
Operating position without dating	In relation to normal vertical mounting plane		±30° in relation to mounting plate, ±90° 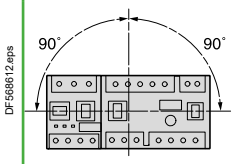 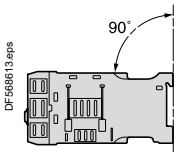	
Flame resistance	Conforming to UL 94	°C	960 (for parts supporting live components)	
	Conforming to IEC/EN 60695-2-12	°C	650 (for other parts)	
Shock resistance (1/2 sine wave, 11 ms)	Conforming to IEC/EN 60068-2-27 (2)		15 gn	
Vibration resistance	Conforming to IEC/EN 60068-2-6 (2) 5…300 Hz		4 gn (plate mounted) 1 gn (mounted on ⊥ rail)	
Resistance to electrostatic discharge	Conforming to IEC/EN 61000-4-2	kV	In open air: 8 - Level 3 On contact: 6 - Level 3	
Immunity to radiated electromagnetic interference	Conforming to IEC 61000-4-3	V/m	10 - Level 3	
Immunity to fast transient bursts	Conforming to IEC 61000-4-4	kV	On supply and relay outputs: 4 - Level 4 Other circuits: 2 - Level 3	
Immunity to radioelectric fields (3)	Conforming to IEC/EN 61000-4-6	V	10 - Level 3	
Immunity to dissipated shock waves	Conforming to IEC/EN 61000-4-5		**Common mode**	**Serial mode**	**Common mode**	**Serial mode**
	Relay outputs and supply	kV	4	2	–	–
	⎓ 24 V inputs	kV	1	1	1	1
	∼ 100…240 V inputs	kV	2	1	2	1
	Voltage inputs	kV	–	–	4	2
	Communication	kV	2	–	2	–
	Temperature sensor (IT1/IT2)	kV	1	0.5	–	–

Altitude derating		2000 m	3000 m	3500 m	4000 m	4500 m
	Rated operational voltage (Ui)	1	0.93	0.87	0.8	0.7
	Max. operating temperature	1	0.93	0.92	0.9	0.88

(1) Certain certifications are pending; please consult your Customer Care Centre.
(2) Without modifying the contact states, in the most unfavourable direction.
(3) This product has been designed for use in environment A and in B, it may cause unwanted electromagnetic disturbance to other devices, which may require the implementation of adequate mitigation measures.

References: pages C1/2 to C1/9
Curves: page C1/29
Dimensions, mounting: pages C1/30 to C1/31
Schemes: pages C1/32 to C1/35

Controller and extension module characteristics

Product type			Controllers		Extension modules	
			LTMR●●●BD	LTMR●●●FM	LTMEV40BD	LTMEV40FM
Control supply						
Operational voltage (U)	Conforming to IEC/EN 60947-1	V	⎓ 24	∼ 100…240	–	
Resistance to voltage dips	Conforming to IEC/EN 61000-4-11	V	0 for 3 ms 70 % of U for 500 ms		–	
Associated protection		A	gG fuse, 0.5		–	
Operational voltage	Limit values	V	⎓ 20.4…26.24	∼ 93.5…264	–	
Current consumption	50/60 Hz	mA	⎓ 56…127	∼ 8…62.8	–	
Connectors	Pitch	mm	5.08		5.08	
Flexible cable without cable end	1 conductor	mm²	0.2…2.5		0.2…2.5	
	2 identical conductors	mm²	0.2…1.5		0.2…1.5	
Flexible cable with cable end						
Without insulated ferrule	1 conductor	mm²	0.25…2.5		0.25…2.5	
	2 identical conductors	mm²	0.5…1.5		0.5…1.5	
With insulated ferrule	1 conductor	mm²	0.25…2.5		0.25…2.5	
	2 identical conductors	mm²	0.2…1		0.2…1	
Solid cable without cable end	1 conductor	mm²	0.2…2.5		0.2…2.5	
	2 identical conductors	mm²	0.2…1		0.2…1	
Conductor size			AWG24 to AWG14		AWG24 to AWG14	
Tightening torque		N.m	0.5…0.6		0.5…0.6	
Flat screwdriver		mm	3		3	
Input characteristics						
Nominal values	Conforming to IEC/EN 61131-1		Type 1 positive logic (⎓: resistive, ∼: capacitive)			
	Voltage	V	⎓ 24	∼ 100…240	⎓ 24	∼ 100…240
	Current	mA	⎓ 7	∼ 3.1 for 100 V ∼ 7.5 for 240 V	⎓ 7	∼ 3.1 for 100 V ∼ 7.5 for 240 V
Logic inputs	Logic state 1 – Voltage	V	15 min	79 < U < 264	15 min	79 < U < 264
	Logic state 1 – Current	mA	2 min…15 max	2 min at 110 V… 3 min at 220 V	2 min…15 max	2 min at 110 V… 3 min at 220 V
	Logic state 0 – Voltage	V	5 max	0 < U < 40	5 max	0 < U < 40
	Logic state 0 – Current	mA	15 max	15 max	15 max	15 max
Response time	Change to state 1	ms	15	25	15	25
	Change to state 0	ms	5	25	5	25
Output characteristics						
Type			Volt free, single break			
Load	∼		250 V / 5 A B300			
	⎓		30 V / 5 A			
Permissible power in cat. AC-15	For 500 000 operating cycles	VA	480 / Ie max: 2 A			
Permissible power in cat. DC-13	For 500 000 operating cycles	W	30 / Ie max: 1.25 A			
Associated protection		A	gG fuse, 4			
Max. frequency		Hz	2			
Max. operating level		op. cycles/h	1800			
Response time	Change to state 1	ms	10 max			
	Change to state 0	ms	10 max			
Measurement details						
Current			1 % for the 0.4…8 A and 1.35…27 A ranges 2 % for the 5…100 A range			
Voltage			1 % from 100 to 830 V			
Earth fault current	Internal measurement without earth fault toroid		5…15 % for current > 0.1 A in the 0.4…8 A range current > 0.2 A in the 1.35…27 A range current > 0.3 A in the 5…100 A range			
	External measurement with earth fault toroid		< 5 % or 0.01 A			
Temperature measurement			2 %			
Power factor			10 %			
Active and reactive power			15 %			
Internal clock			±30 min / year			

Ref.

References: pages C1/2 to C1/9
Curves: page C1/29
Dimensions, mounting: pages C1/30 to C1/31
Schemes: pages C1/32 to C1/35

Life Is On Schneider Electric

Bus and network characteristics

Type of bus/network		Modbus	CANopen	DeviceNet	PROFIBUS DP	Ethernet
Physical interface		2-wire RS 485	ISO 11898	ISO 11898	polarised 2-wire RS 485	IEEE 802.3
Addressing		1 to 247	1 to 127	1 to 64	1 to 125	0 to 159 (1)
Transmission speeds		1.2 to 19.2 kb/s	10, 20, 50, 125, 250, 500, 800 and 1000 kb/s + Auto baud	125 to 500 kb/s	9.6 kb to 12 Mb/s	10/100 Mb/s, with automatic recognition
Connections		RJ45/terminal block	9-way SUB-D/ terminal block	Terminal block	9-way SUB-D/ terminal block	RJ45
Cables		2 shielded twisted pairs	4 twisted, shielded wires	4 twisted, shielded wires	2 shielded twisted pairs, type A	2 shielded twisted pairs

LTMCU operator control unit

Environment

Conforming to standards			IEC/EN 61131-2, UL60947-4-1A, CSA 22-2 n°60947-4-1
Product certifications			UL, CSA, CE, EAC/GOST, RCM/CTIC'K
Ambient air temperature around the device	Storage	°C	-40…+80
	Operation	°C	-20…+60
Relative humidity			15…95 % without condensation
Climatic withstand	Conforming to IEC/EN 60068-2-30		12 x 24 hour cycles
Degree of protection	Conforming to IEC 60947-1		IP54
Shock resistance	Conforming to IEC/EN 60068-2-27		15 gn / 11ms
Vibration resistance	Conforming to IEC/EN 60068-2-6 5…300 Hz		4 gn
Flame resistance	Conforming to IEC 60947-1	°C	650
	Conforming to UL 94		V2

Electrical characteristics

Supply to the product			Powered via the controller
Maximum current		mA	140
Maximum power dissipated		W	1
Resistance to electromagnetic discharge	Conforming to IEC/EN 61000-4-2	kV	In open air: 8. Level 3 On contact: 4. Level 3
Immunity to radiated electromagnetic interference	Conforming to IEC/EN 61000-4-3	V/m	10 - Level 3
Immunity to fast transient bursts	Conforming to IEC/EN 61000-4-4	kV	2, shielded access. Level 3
Immunity to radioelectric fields	Conforming to IEC/EN 61000-4-6	V	10. Level 3
Immunity to shock waves	Conforming to IEC/EN 61000-4-5	kV	2, shielded access. Level 3

Physical characteristics

Mounting			Flush mounted
Display			Backlit LCD
Signalling			By 4 LEDs
Cabling			RJ45

(1) For DHCP, stored IP, addressing limited by subnet mask.

Motor management devices
Ref.

LT6CT●●●● external current transformer characteristics

Conforming to standards		IEC 60185, BS 7626			
Precision		Class 5P			
Precision limit factor		15			
Rated insulation voltage (Ui)		690			
Maximum operating temperature	**°C**	50			
Transformer ratio	**A**	100/1	200/1	400/1	800/1
Diameter of conductor passage hole	**mm**	35	35	35	35
Maximum cabling c.s.a.	**mm²**	30 x 10	30 x 10	30 x 10	incorporated (1)

Earth fault toroid characteristics

Toroid type		**50437**	**50438**	**50439**	**50440**	**50441**	**50442**	**50485**	**50486**
Rated insulation voltage Ui	**V**	1000							
Operating temperature	**°C**	- 35…+ 70							
Protection index		IP30 (connections IP20)							
Transformer ratio		1/1000							
Rated operational current Ie	**A**	65	85	160	250	400	630	85	250
Max. conductor c.s.a. per phase	**mm²**	25	50	95	240	2 x 185	2 x 240	50	240

DA1TT●● probe characteristics

Conforming to standards			IEC 60034-11 mark A
Economy resistor	At 25 °C	Ω	3 x 250 in series
Rated operational voltage (Ue)	Per probe	**V**	⎓ 2.5 max
Rated insulation voltage (Ui)		**kV**	2.5
Insulation			Reinforced
Length of connecting cables	Between probes	**mm**	250
	Between probe and motor terminal plate	**m**	1

Guaranteed operating zones: example with 3 probes type DA1TT●●● (250 Ω at 25 °C) in series, conforming to standard EC 60034-11, mark A.

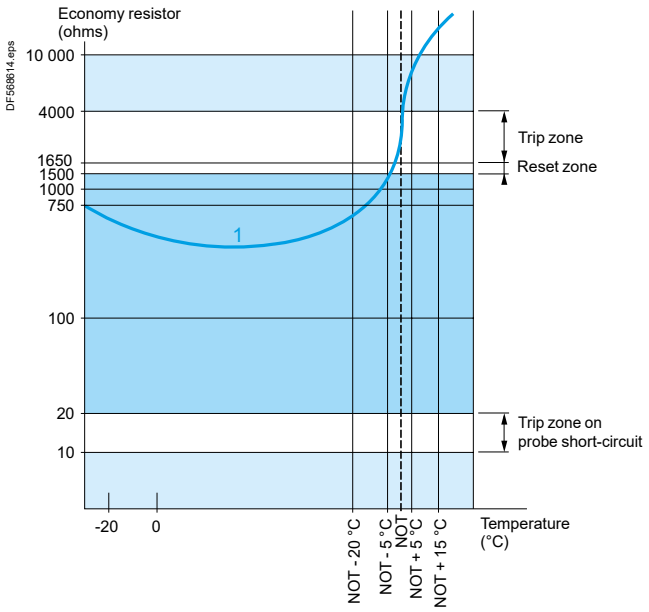

1 3 probes type DA1●●● (250 Ω at 25 °C) in series.

NOT: Nominal Operating Temperature.

Protection unit tripped.

Protection unit reset.

(1) Electrical connection to be made using M10 bolt.

References: pages C1/2 to C1/9
Curves: page C1/29
Dimensions, mounting: pages C1/30 to C1/31
Schemes: pages C1/32 to C1/35

Life Is On Schneider Electric

Cold state curves

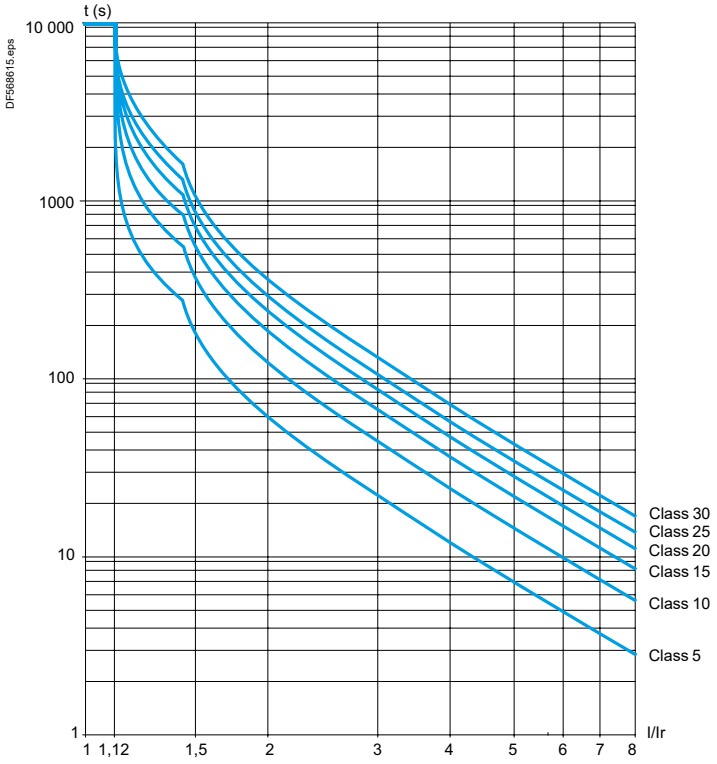

Hot state curves

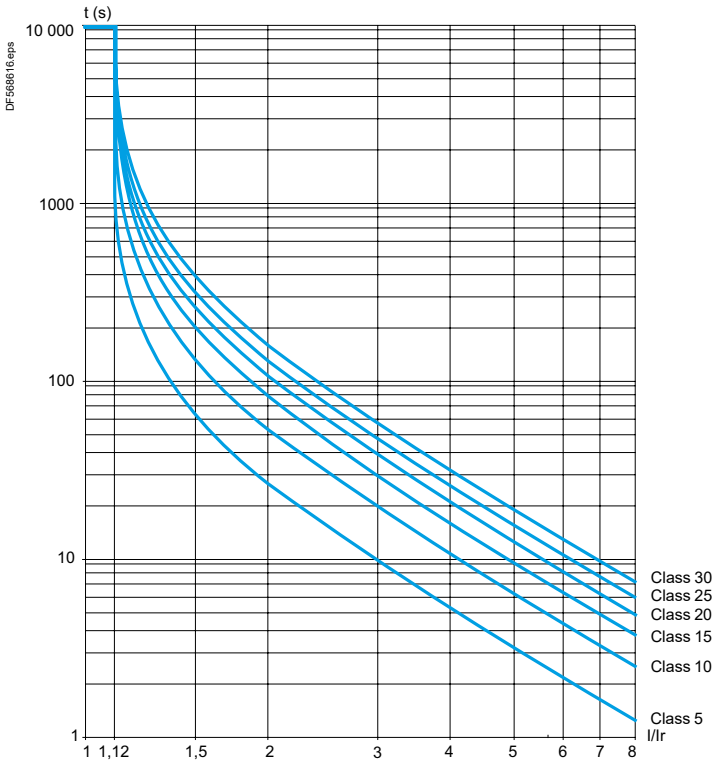

Dimensions, mounting

LTMR●● controllers

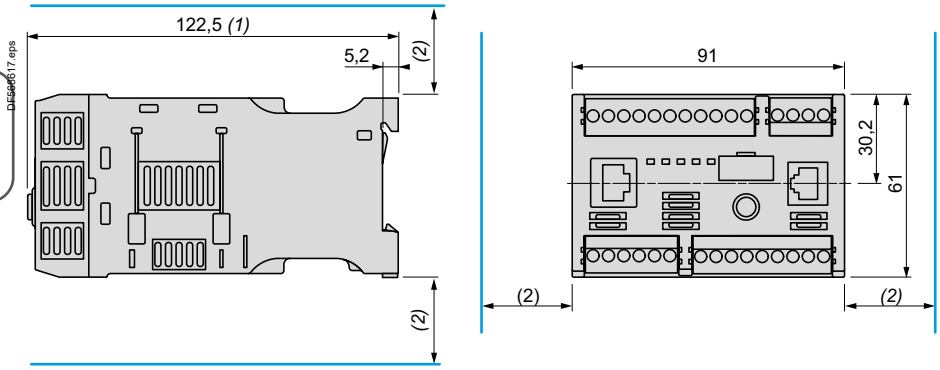

LTMEV40●● extension modules

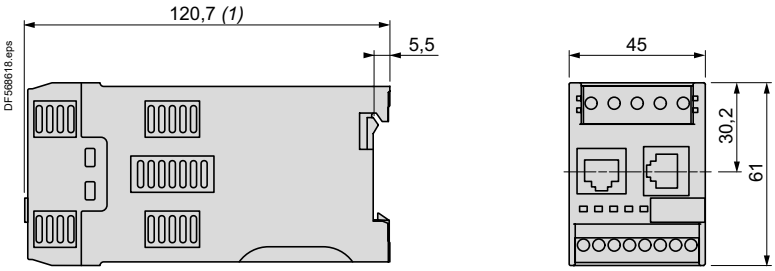

LTMCU operator control unit

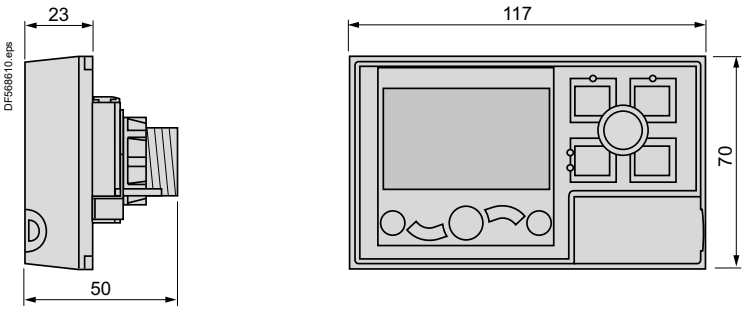

Panel mounting, cut-out

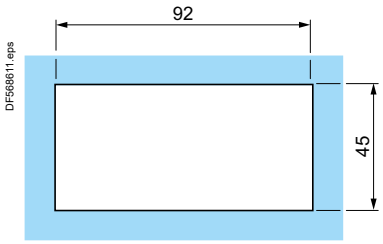

LTM9F

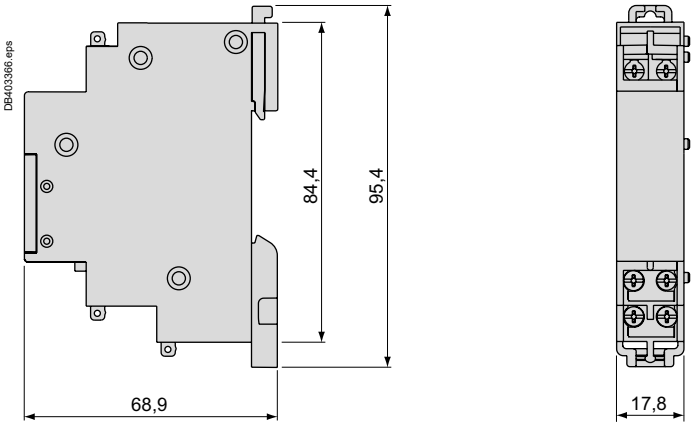

(1) 140 mm with RJ45 connector for connection to extension module and to network,
166 mm with PROFIBUS DP/CANopen connector.
(2) Leave a gap around the device of: 9 mm at 45 °C, 9 to 40 mm from 45 to 50 °C, 40 mm at 60 °C.

Dimensions

Current transformers

LT6CT

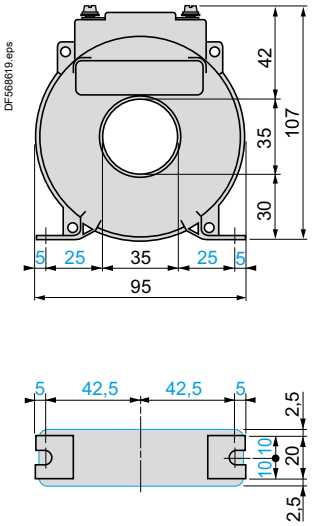

HMI terminal

XBTN410

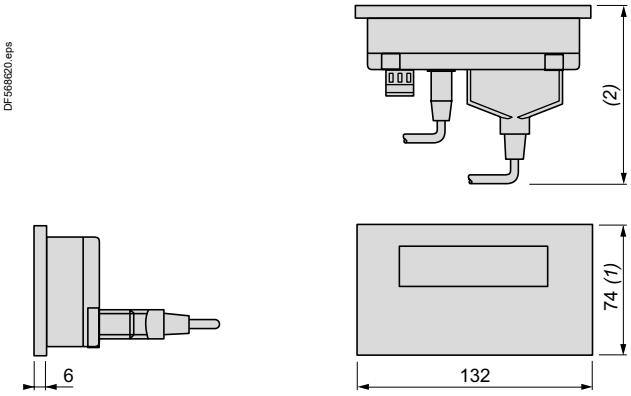

(1) 104 mm with fixing clips (supplied with the product).
*(2) 58 mm with SUB-D 25-way elbowed cable **XBTZ9680** for Twido, TSX Micro and Premium or **XBTZ998** for Advantys STB.*
*104 mm with SUB-D 25-way cable **XBTZ68/Z9681** for Twido, TSX Micro and Premium.*

Earth fault toroids

50437 and 50438

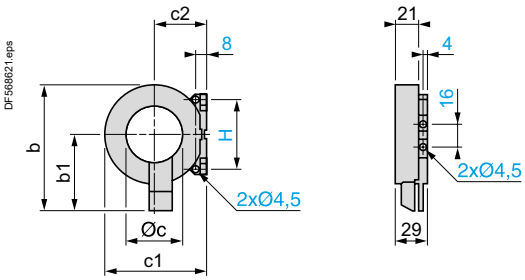

Type	b	b1	Øc	c1	c2	H
50437	83	53	30	60	31	50
50438	109	66	50	87	45	60

50439, 50440 and 50441

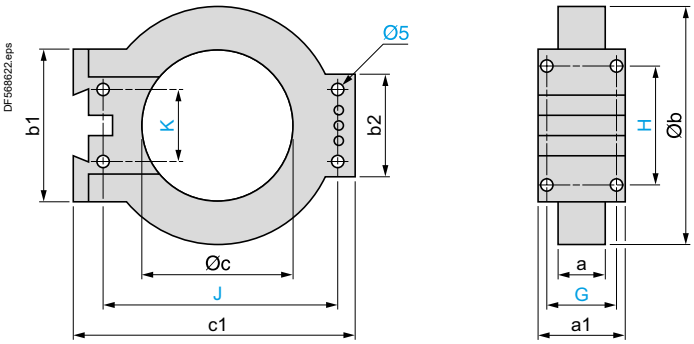

Type	a	a1	Øb	b1	b2	Øc	c1	G	H	J	K
50439	26.5	44	122	80	55	80	150	35	65	126	40
50440	26.5	44	164	80	55	120	190	35	65	166	40
50441	29	46	256	120	90	196	274	37	104	254	60

50442

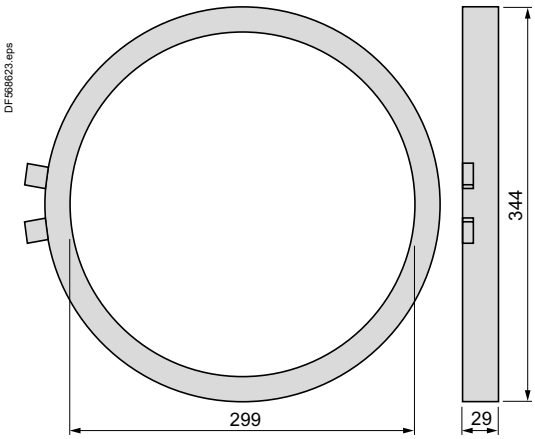

50485 and 50486

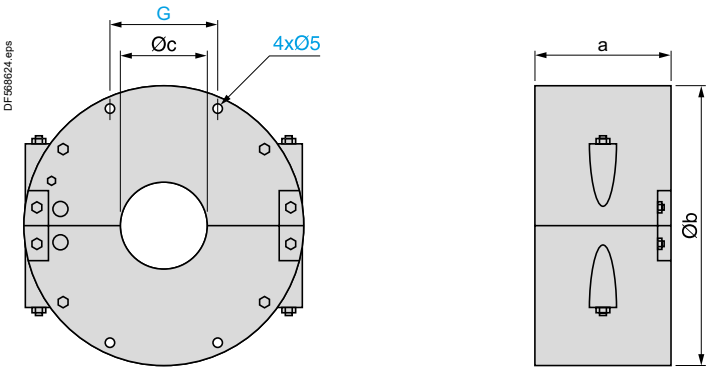

Type	a	Øb	Øc	G
50485	72	148	46	57
50486	78	224	110	76

References:
pages C1/2 to C1/9
Characteristics:
pages C1/14 to C1/28
Curves:
page C1/29
Schemes:
pages C1/32 to C1/35

Schemes

LTMR●●FM wiring with LTM9F filter

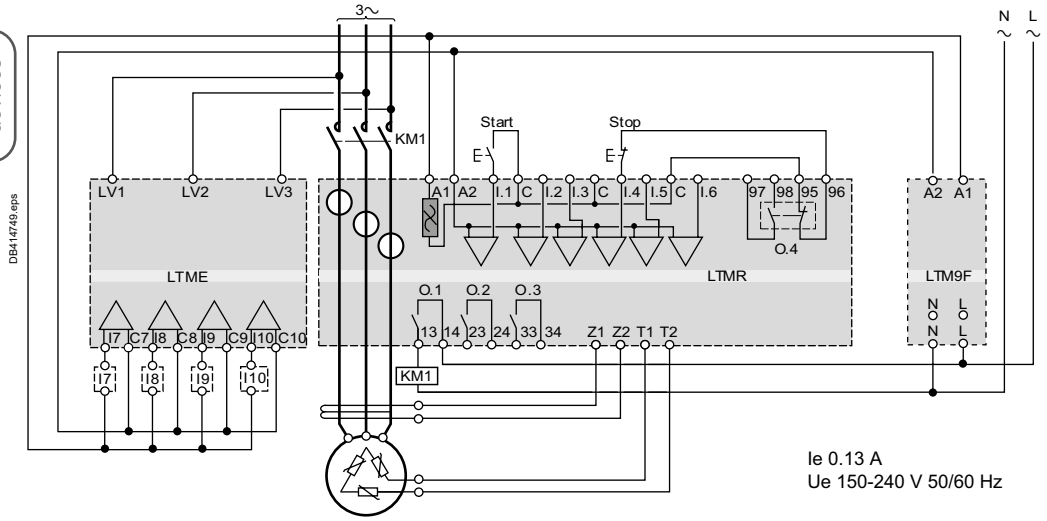

Note: *inputs MUST be connected across the common terminals (C).*

Overload mode

3-wire local-control

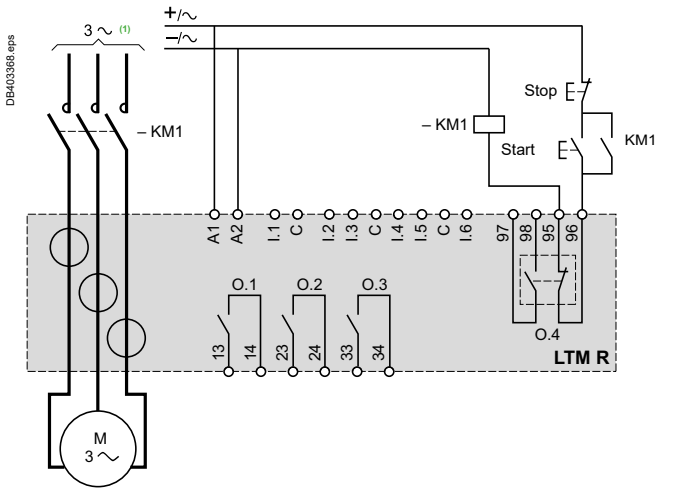

Independent mode

3-wire local-control

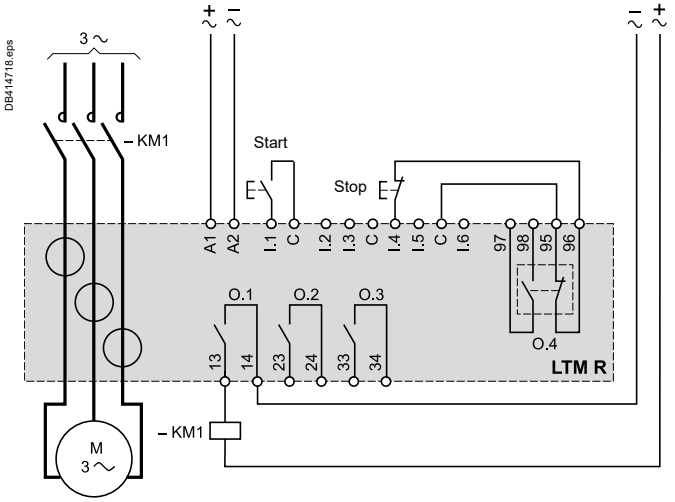

(1) Connection of a single-phase motor is possible. In this case, do not use the central current transformer.

2-wire local-control

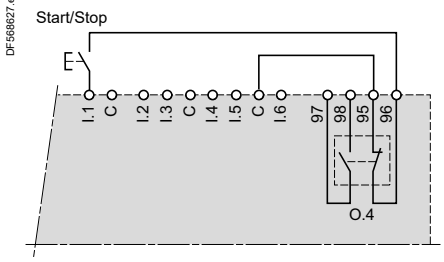

3-wire with switchable local/network control

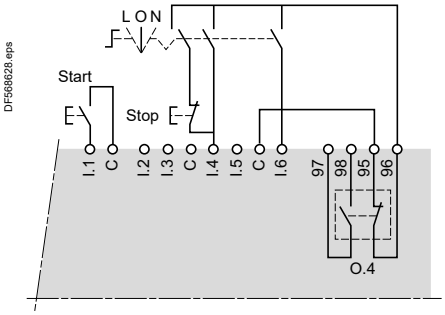

2-wire with switchable local/network control

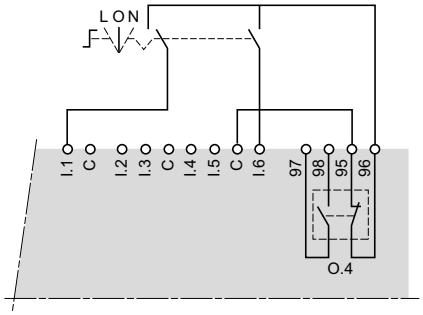

L: Local control
O: Stop
N: Network control

Schemes

Reverser mode

3-wire local-control

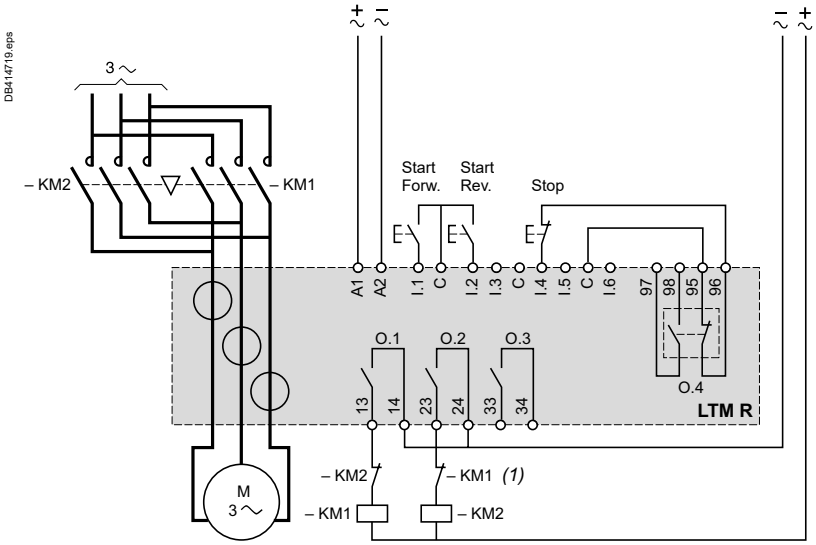

2-step mode, star-delta application

3-wire local-control

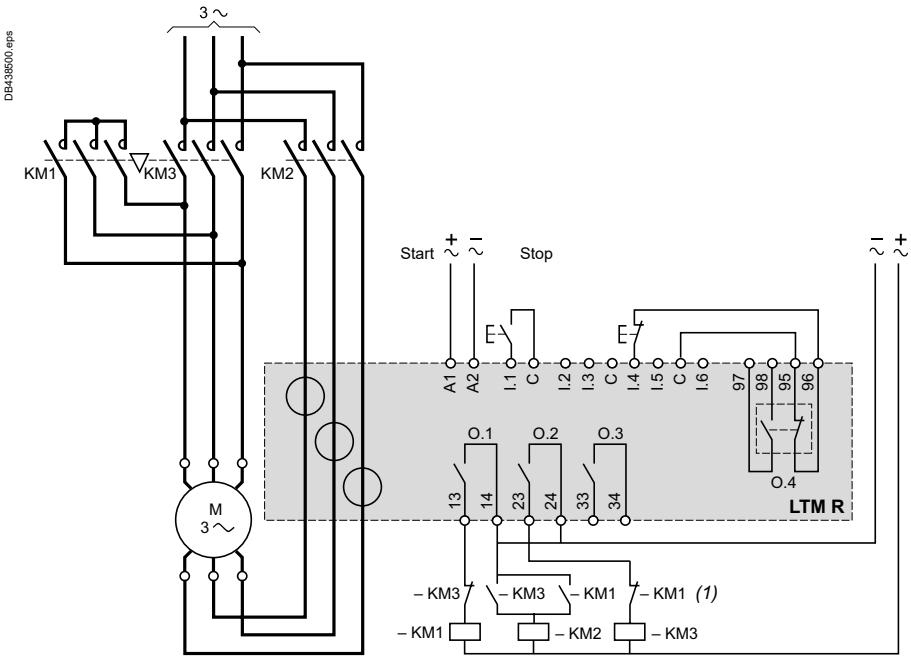

(1) Contacts for interlocking KM1 and KM2 are not obligatory because the controller electronically interlocks outputs O.1 and O.2.

Schemes

2-step mode, primary resistor application

3-wire local-control

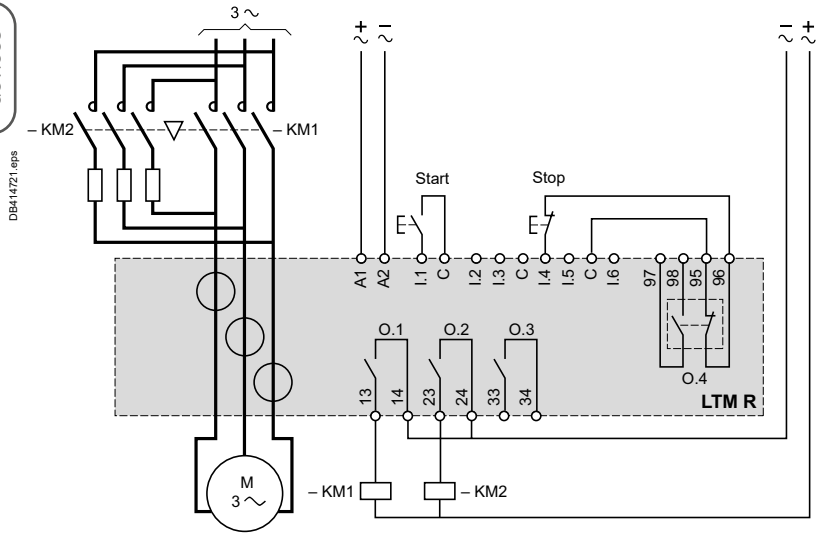

2-speed mode, Dahlander application

3-wire local-control

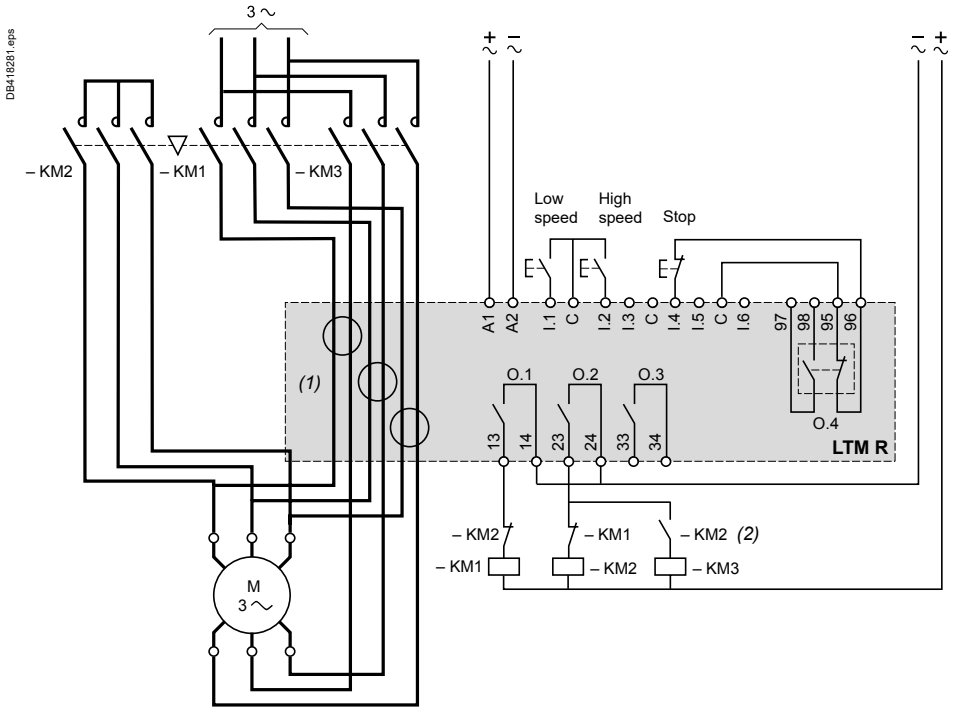

(1) For a Dahlander application, all the power cables must pass through current transformers. The controller can also be placed upstream of the contactor. In this case, and if the Dahlander motor is used in "variable torque" mode, all the cables downstream of the contactors must be of identical size.
(2) Contacts for interlocking KM1 and KM2 are not obligatory because the controller electronically interlocks outputs O.1 and O.2.

Schemes

Earth fault toroid and motor temperature probe connection

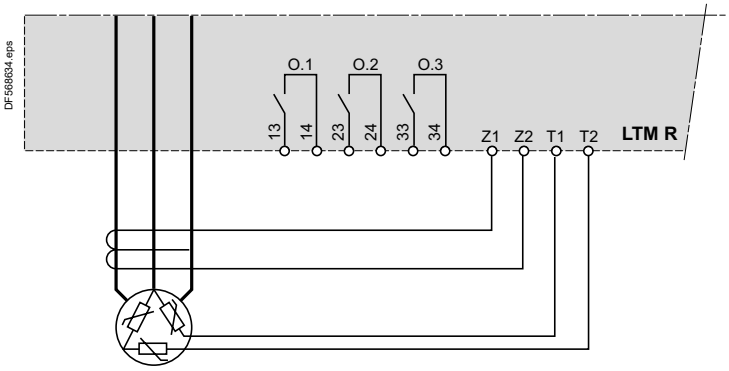

Connection of outputs for motor control mode function

Without intermediate relay

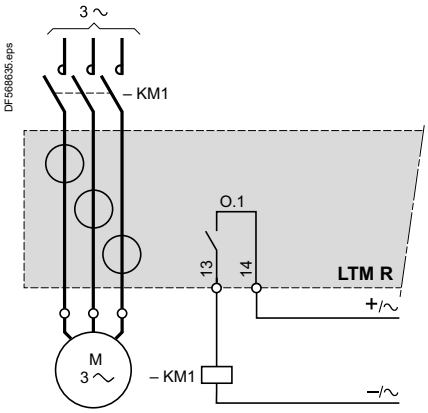

With intermediate relay

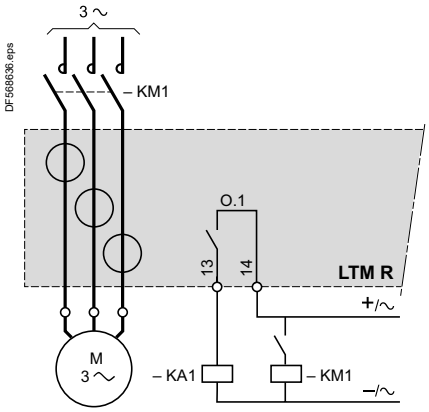

Motor management devices
Ref.

Life Is On Schneider Electric

TeSys Active
island Motor starters

Chapter
C2

TeSys island Motor starters

Type of information		Pages
Introduction Digital multifunctional load management solution		C2/2

Digital multifunctional load management solution

TeSys Active - island Motor starters are designed to switch, protect, and manage motors and other electrical loads up to 80 Amps (AC3) in an electrical control panel.

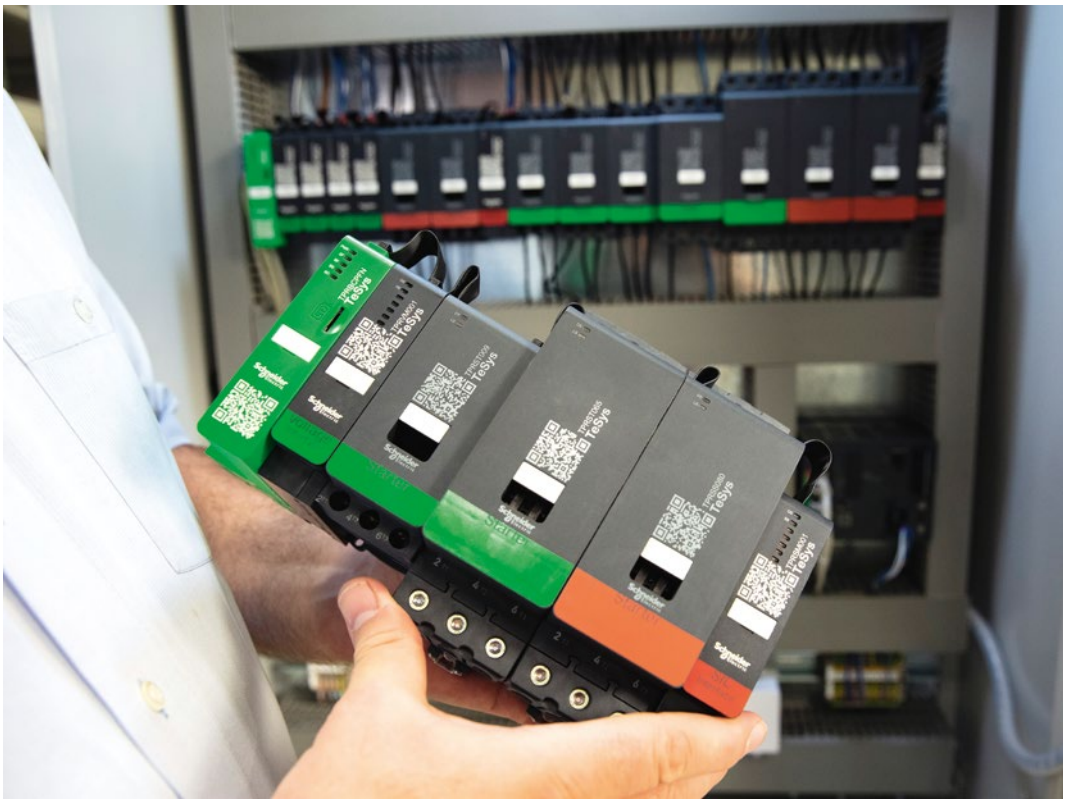

Dedicated to Control and Monitor Machine and Processes

TeSys island is a digital load management solution that makes machines and processes smarter and more reliable.

TeSys island is a fully digitized and object-oriented load management system and an Industry 4.0 compliant data provider.

It is reducing time to market and is enabling OEMs to move forward in their Industry 4.0 journey.

Benefits of the object-oriented functional approach

The TeSys avatar approach simplifies application and system configuration and reduces engineering tasks. Thus TeSys island makes the machine engineering and installation phase much faster.

In addition, TeSys island can be easily integrated into 3rd party automation systems and supports several fieldbuses like EtherNet/IP, Modbus TCP, PROFINET and PROFIBUS.

TeSys island gives users access to all relevant load data for advanced system diagnostics.

More information

- Watch videos, read documents and use the product selector online on Schneider Electric website.

Life Is On Schneider Electric

TeSys island catalog:

> Ref. Document: LVCATISL_EN

TeSys island design guides:

> 8536IB1901: TeSys island System Guide
> 8536IB1902: TeSys island Installation Guide
> 8536IB1903: TeSys island Operating Guide
> 8536IB1904: TeSys island Functional Safety (Safe Stop according to EN 61800-5-2) Guide
> 8536IB1905: Third Party Function Block Guide and more.

Main characteristics

- **TeSys island** manages motors and other electrical loads up to 80 A (AC-3) / 37 kW/40 hp
- Fieldbus connectivity via bus coupler for EtherNet/IP, Modbus TCP, PROFINET or PROFIBUS
- Availability of all relevant load data like current, power, energy and advanced diagnostic data
- Simplified engineering and commissioning due to **TeSys avatar** objects and dedicated configuration and maintenance tools
- Up to 20 modules on 1 island mounted on DIN rail (up to 112 cm length)
- No control or auxiliary wiring required, thanks to full connectivity over fieldbus
- All adjustments and setting are digitized, no mechanical dials or dip switches
- Limited number of references including 5 starter sizes, digital & analog I/Os and voltage measurement modules
- SIL starter available for integration into functional safety systems according to IEC 61508, IEC 62061 and ISO 13849-1, including TUV certification (Stop 0 and 1 with wiring categories 1 to 2, suitable for PL c, d and SIL level 2), UKCA
- Fully complaint to international standards (IEC / UL / CSA 61010, IEC / UL / CSA 60947, GB/T14018)
- Embedded Cybersecurity (Achilles Level 2).

Modular architecture, thanks to **TeSys** Active - island Motor starters internal bus

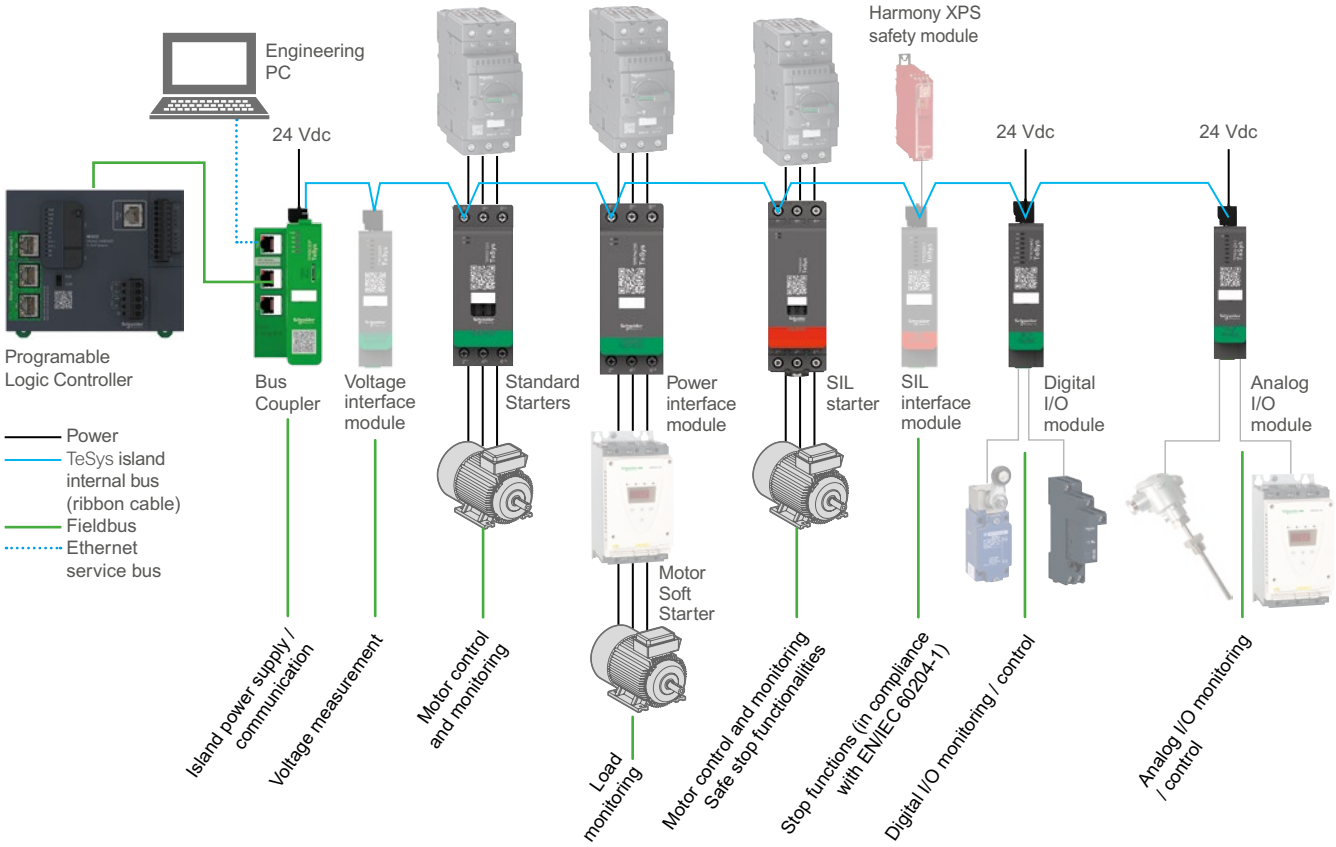

Notes

Notes

Notes

Notes

Control Panel Technical guides

> Discover our technical guides collection. They are dedicated to frequent issues faced when designing an installing a control panel.

> Free download on www.se.com with the document reference or from the QR codes.

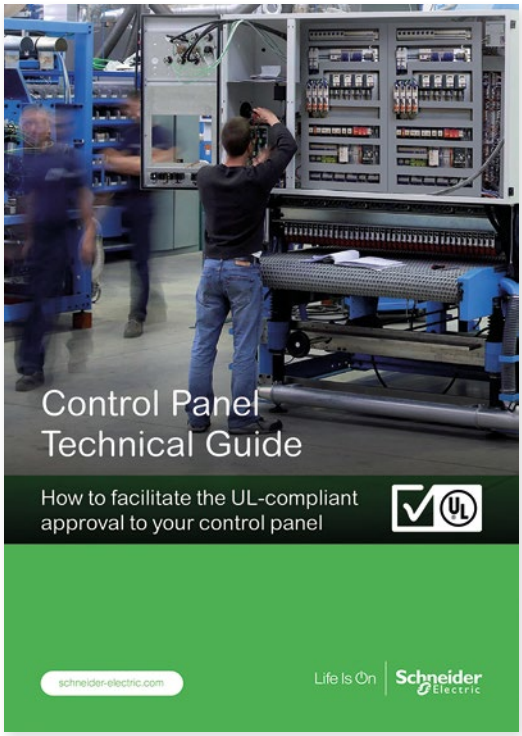

How to facilitate the UL-compliant approval to your control panel

> Ref: CPTG005_EN

> Click on QR code to download

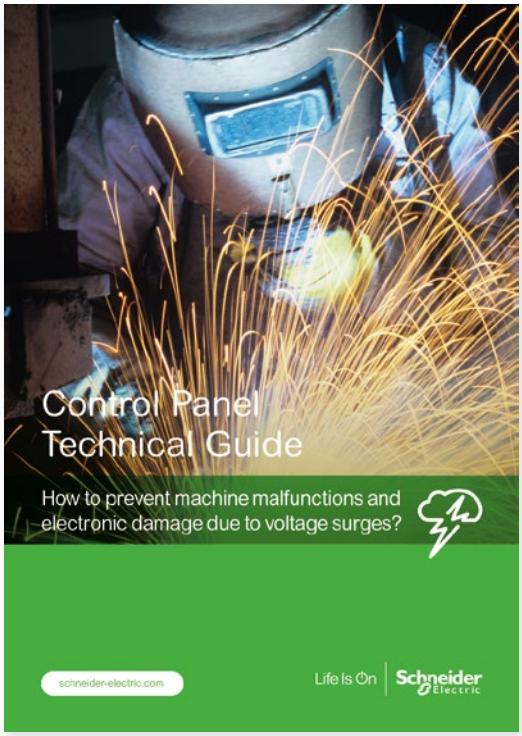

How to prevent machine malfunctions and electronic damage due to voltage surges

> Ref: CPTG002_EN

> Click on QR code to download

Control Panel Technical guides

> Discover our technical guides collection. They are dedicated to frequent issues faced when designing an installing a control panel.

> Free download on www.se.com with the document reference or from the QR codes.

How to protect a machine from malfunctions due to electromagnetic disturbance

> Ref: CPTG003_EN

> Click on QR code to download

How to reduce damage to components through effective thermal management

> Ref: CPTG001_EN

> Click on QR code to download

Control Panel Technical guides

> Discover our technical guides collection. They are dedicated to frequent issues faced when designing an installing a control panel.

> Free download on www.se.com with the document reference or from the QR codes.

How define the right outdoor solution and optimize its durability

> Ref: CPTG006_EN

> Click on QR code to download

How to protect electrical equipment from condensation

> Ref: UE12MK03EN

> Click on QR code to download

Control Panel Technical guides

> Discover our technical guides collection. They are dedicated to frequent issues faced when designing an installing a control panel.

> Free download on www.se.com with the document reference or from the QR codes.

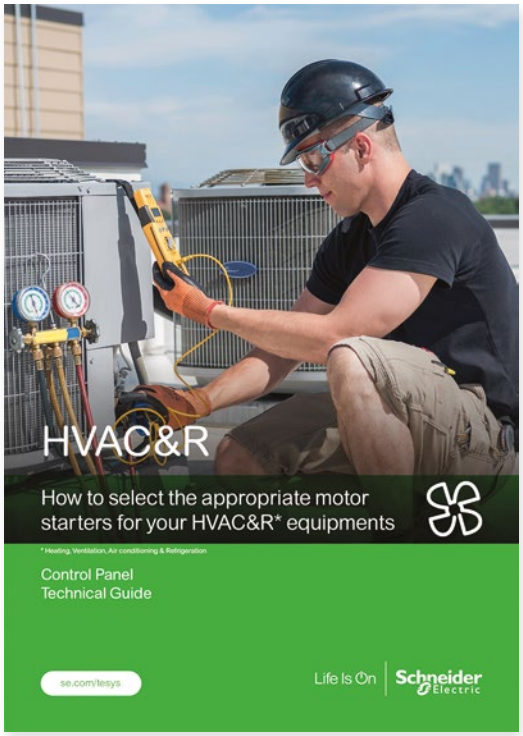

How to select the appropriate motor starters for your HVAC & R* equipments

* Heating, Ventilation, Air conditioning & Refrigeration

> Ref: CPTG007_EN

> Click on QR code to download

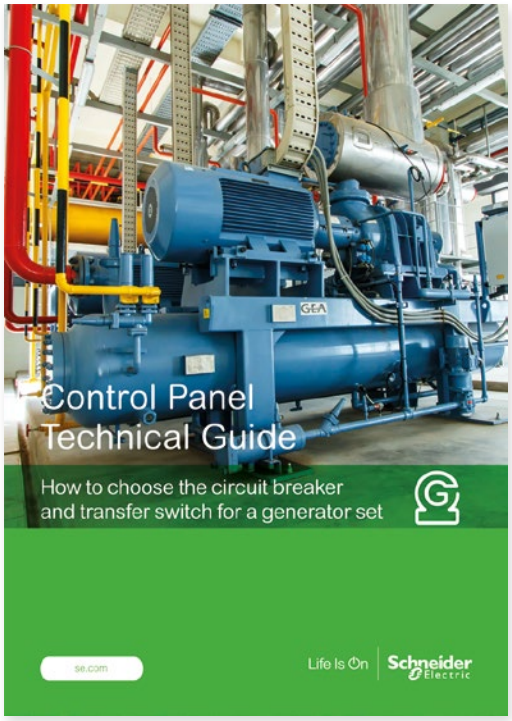

How to choose the circuit breaker and transfer switch for a generator set

> Ref: CPTG008_EN

> Click on QR code to download

Control Panel Technical guides

> Discover our technical guides collection. They are dedicated to frequent issues faced when designing an installing a control panel.

> Free download on www.se.com with the document reference or from the QR codes.

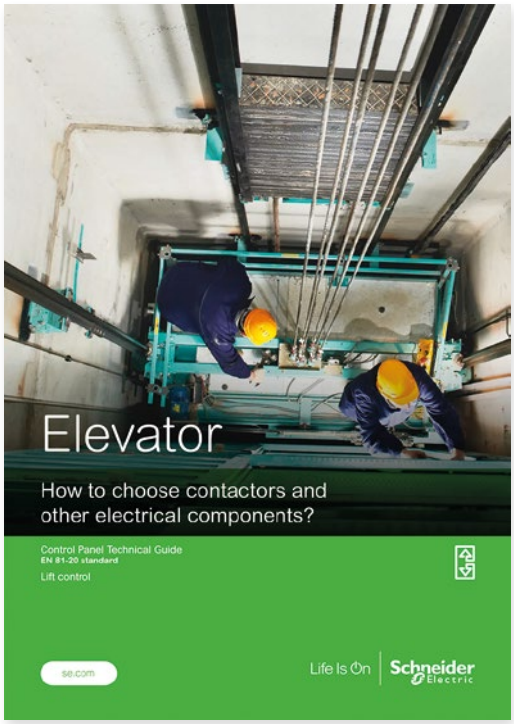

New edition 2020

Elevator
How to choose contactors and other electrical components

> Ref: CPTG009_EN

> Click on QR code to download

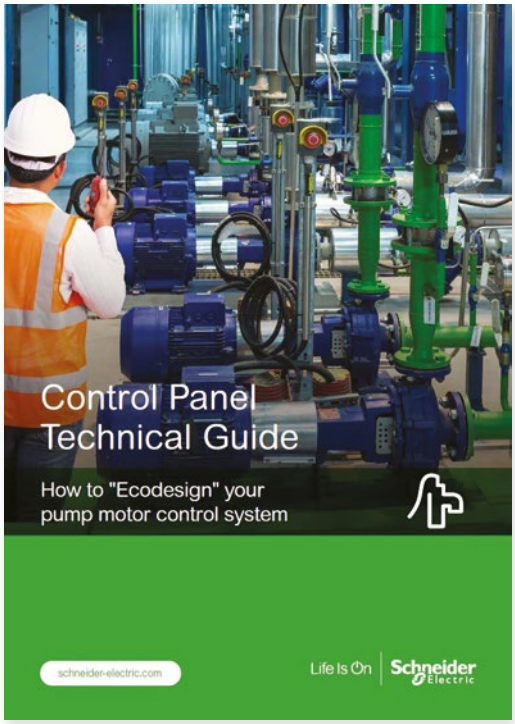

How to "Ecodesign" your pump motor control system

> Ref: CPTG010_EN

> Click on QR code to download

Control Panel Technical guides

> Discover our technical guides collection. They are dedicated to frequent issues faced when designing an installing a control panel.

> Free download on www.se.com with the document reference or from the QR codes.

How to quickly design optimized contactor assemblies

> Ref: CPTG011_EN

> Click on QR code to download

Catalogues of contactors for specific applications

> For applications requiring components conforming to specific standards with increased severity.

> **TeSys** Switching
TeSys D, K S355 and S207 series contactors are built for these purpose, with new materials.

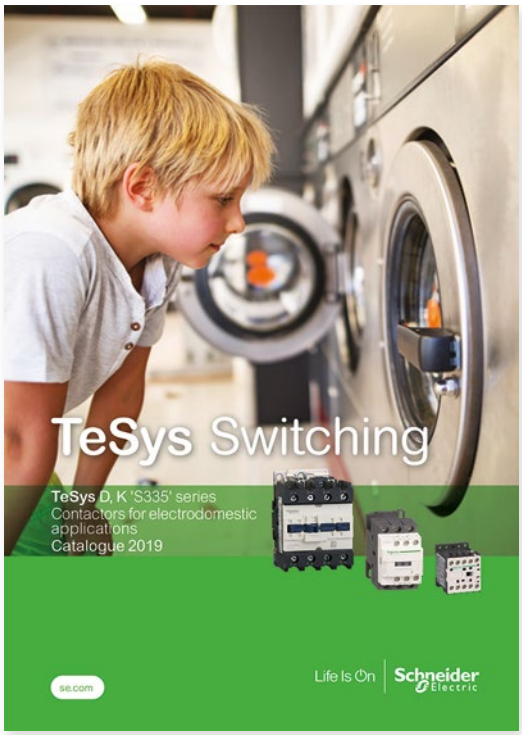

> **TeSys** Switching
TeSys D, K 'S355 series' (EN60335 standards)
Contactors for electrodomestic applications

> Ref: LVCATESDK335_EN

> Click on QR code to download.

> **TeSys** Control
TeSys K, Deca, Giga S207 series (EN45545 R22 HL3 standards)
Contactors for railways applications

> Ref: LVCATRAIL_EN

> Click on QR code to download.

Green Premium™

An industry leading portfolio of offers delivering sustainable value

Green Premium™

More than 75% of our product sales offer superior transparency on the material content, regulatory information and environmental impact of our products:

- RoHS compliance
- REACh substance information
- Industry leading # of PEP's*
- Circularity instructions

Discover what we mean by green
Check your products!

The Green Premium program stands for our commitment to deliver customer valued sustainable performance. It has been upgraded with recognized environmental claims and extended to cover all offers including Products, Services and Solutions.

CO_2 and P&L impact through… Resource Performance

Green Premium brings improved resource efficiency throughout an asset's lifecycle. This includes efficient use of energy and natural resources, along with the minimization of CO_2 emissions.

Cost of ownership optimization through… Circular Performance

We're helping our customers optimize the total cost of ownership of their assets. To do this, we provide IoT-enabled solutions, as well as upgrade, repair, retrofit, and remanufacture services.

Peace of mind through… Well-being Performance

Green Premium products are RoHS and REACh compliant. We're going beyond regulatory compliance with step-by-step substitution of certain materials and substances from our products.

Improved sales through… Differentiation

Green Premium delivers strong value propositions through third-party labels and services. By collaborating with third-party organizations we can support our customers in meeting their sustainability goals such as green building certifications.

*PEP: Product Environmental Profile (i.e. Environmental Product Declaration)

Life Is On | Schneider Electric

Schneider Electric Industries SAS

35, rue Joseph Monier
CS 30323
92506 Rueil Malmaison Cedex
France

RCS Nanterre 954 503 439
Capital social 928 298 512 €
www.se.com

September, 2024
ART834519

© 2024 - Schneider Electric. All Rights Reserved.
All trademarks are owned by Schneider Electric Industries SAS or its affiliated companies.
Document reference: MKTED210011EN

This document has been printed on recycled paper