Rack Air Containment Front Assembly for InRow RA (ACCS1008)—Installation

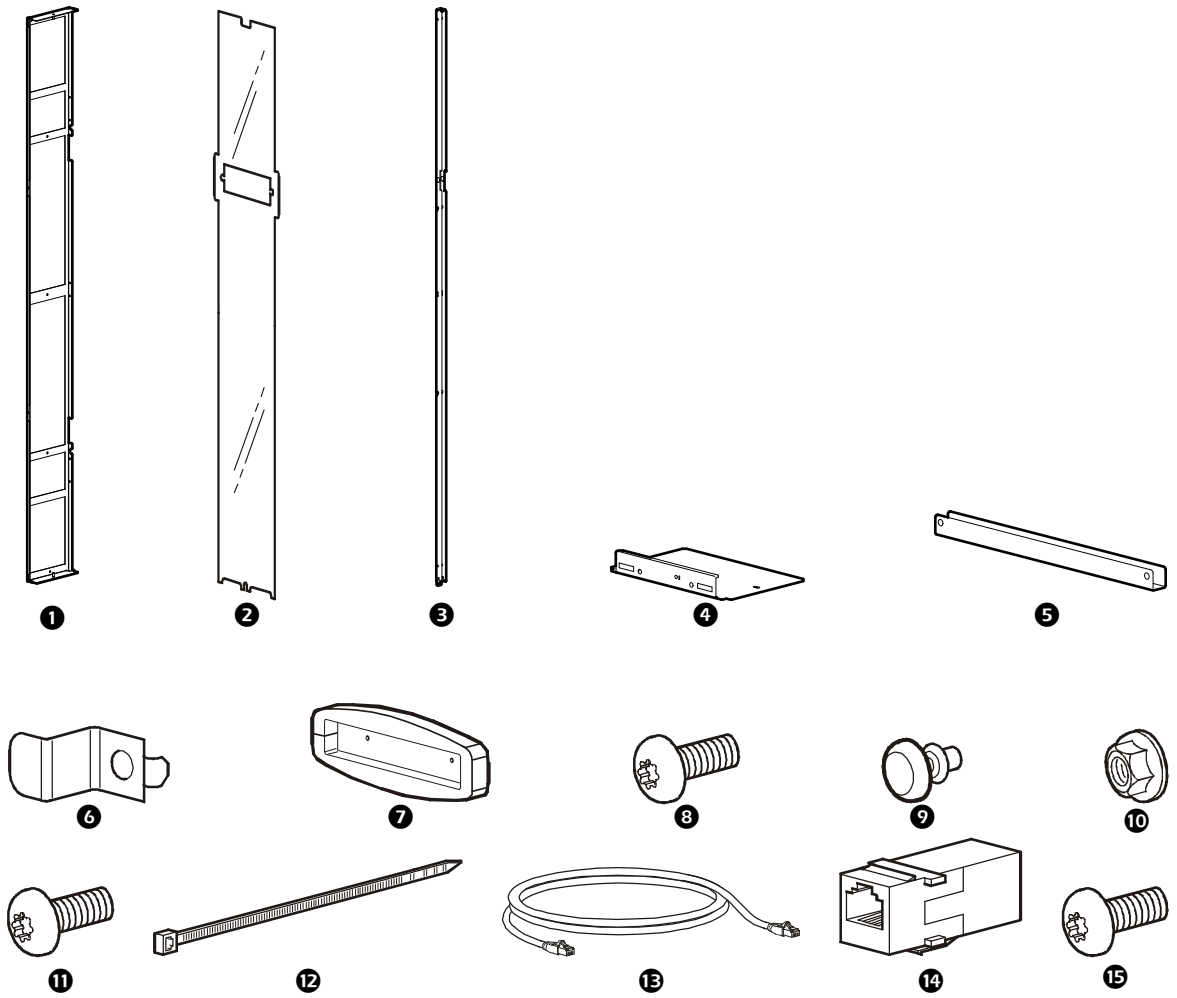

Item	Description	Quantity
❶	Side plenums	2
❷	Front insert	1
❸	Side retainer inserts	2
❹	Top/bottom plenums	2
❺	Bottom retainer insert	1
❻	Catch door plenum	1
❼	Display air block	1
❽	M5 × 12-mm pan head screws	10

Item	Description	Quantity
❾	6-mm snap rivets	6
❿	M6 flanged hex nuts	4
⓫	M6 × 12-mm pan-head screws	4
⓬	Wire tie	3
⓭	Display interface cable	1
⓮	RJ-45 connector	1
⓯	Display mounting hardware (included with unit)	2

1

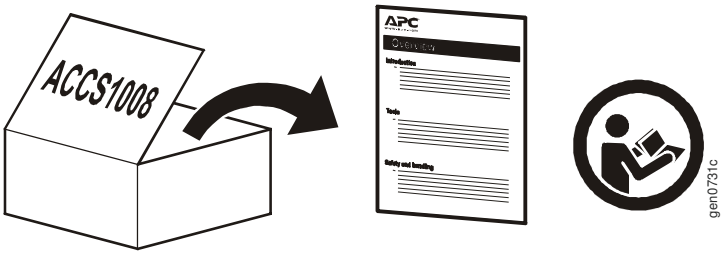

2

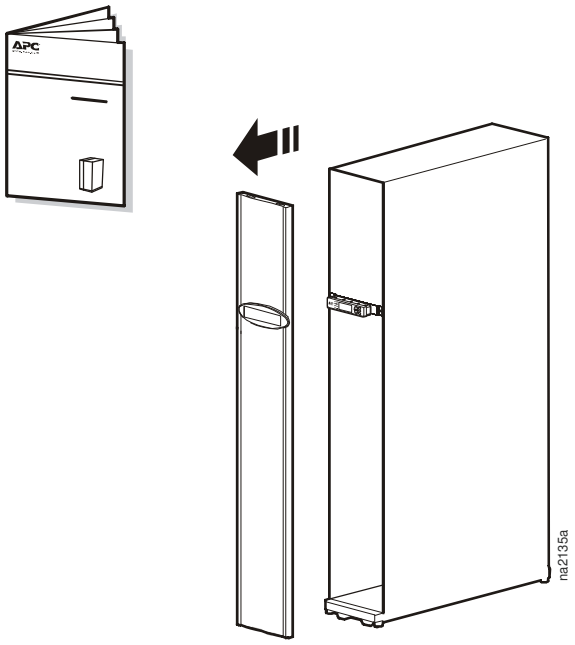

3

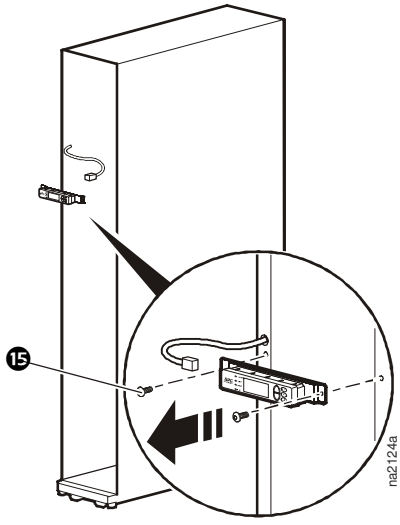

4

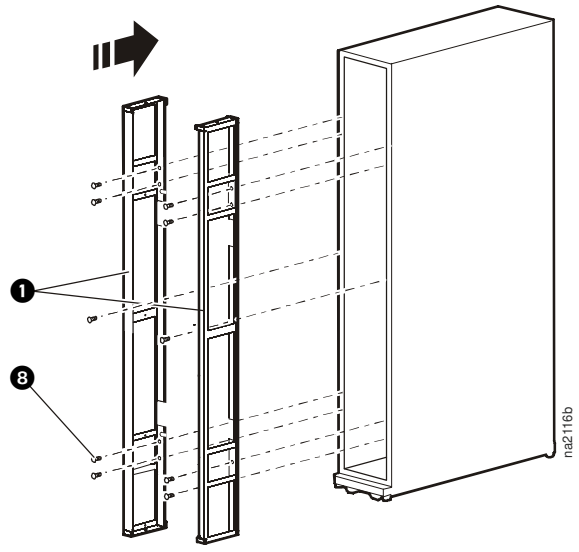

5

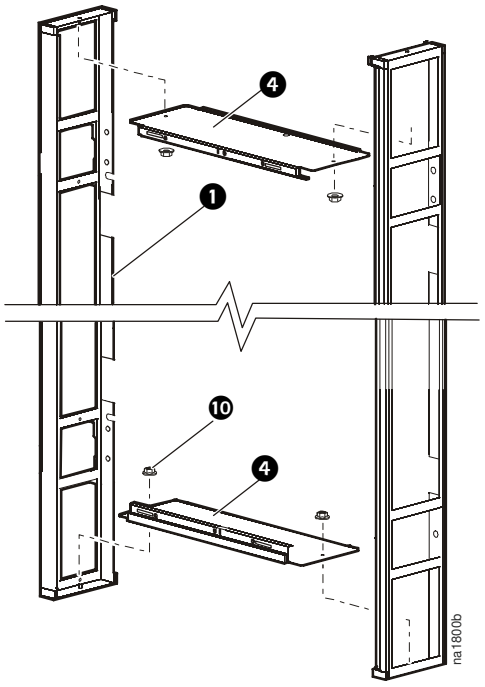

6

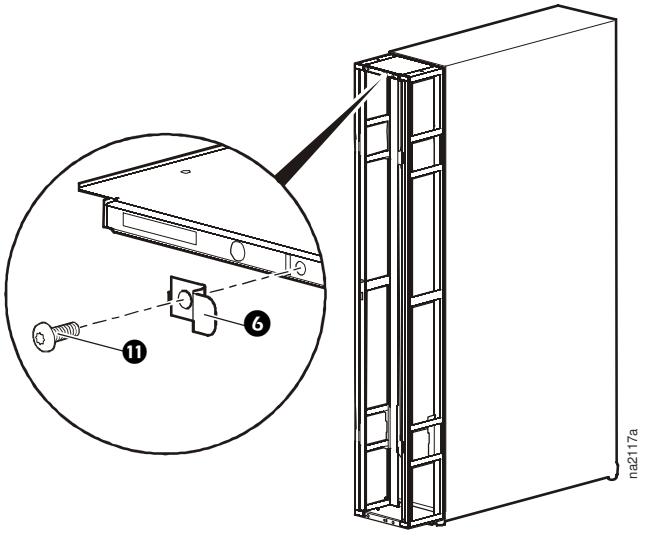

7

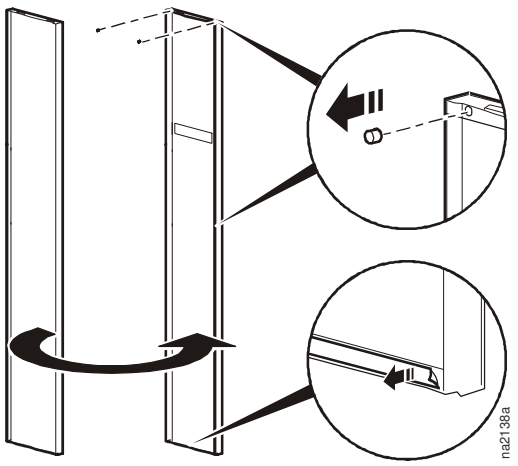

8

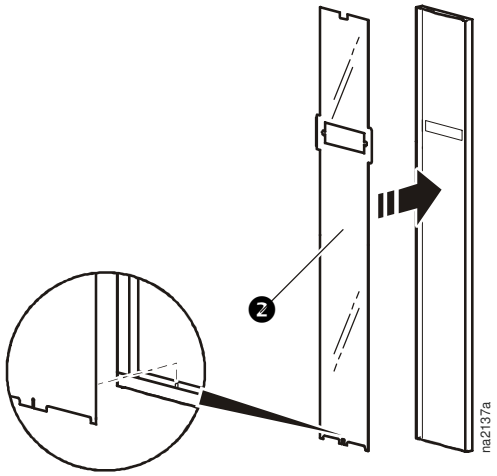

9

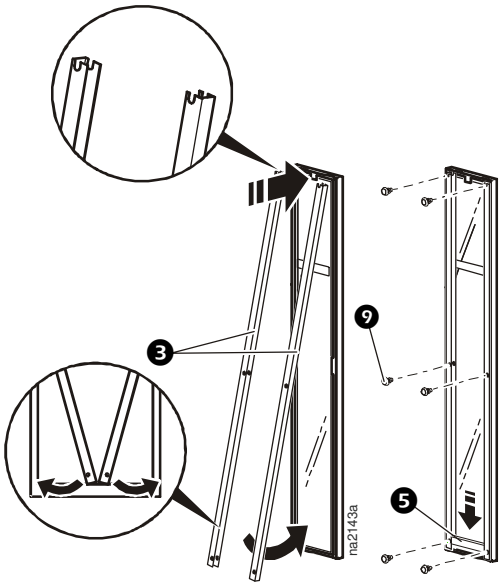

10

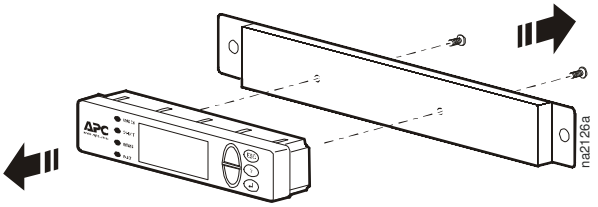

11

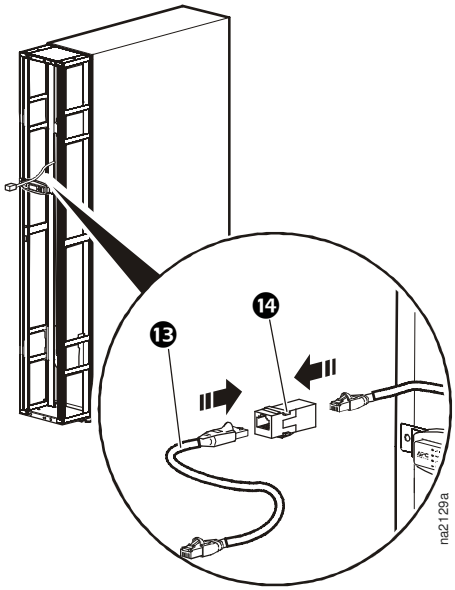

12

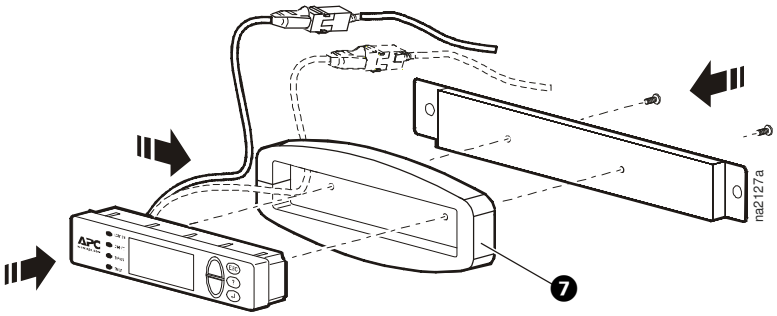

13

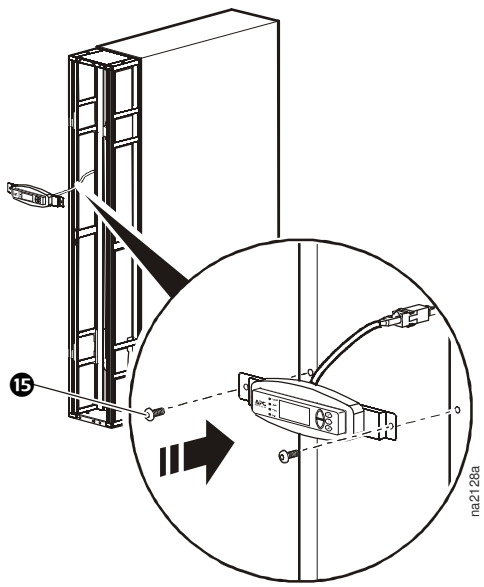

14

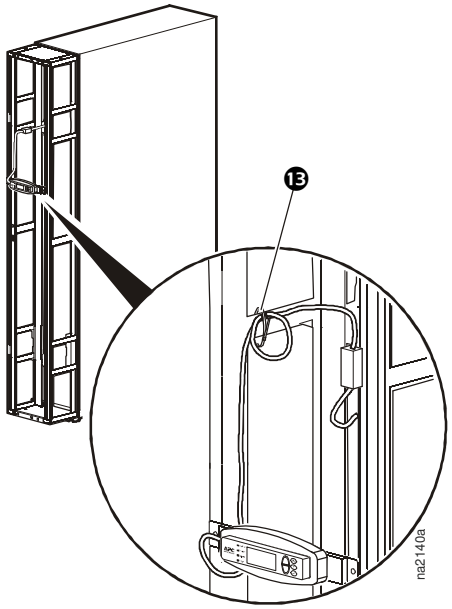

15

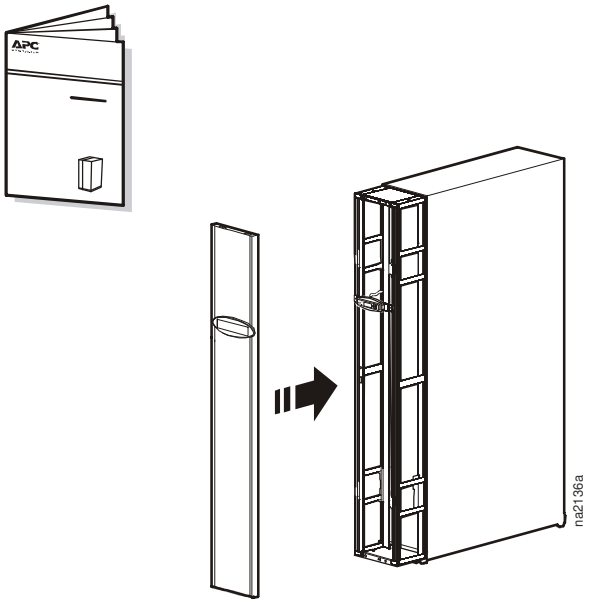

Customer support and warranty information is available at the APC Web site, **www.apc.com**.

© 2011 APC by Schneider Electric. APC and the APC logo are owned by Schneider Electric Industries S.A.S., American Power Conversion Corporation, or their affiliated companies. All other trademarks are property of their respective owners.

990-3944-001
4/2011