Catalog Numbers, Features and Ratings

- 1 PHASE, 3 WIRE, 120/240V ~
- 150A, 22K AIC MAIN BREAKER FACTORY INSTALLED (SEE WIRING DIAGRAM FOR DETAILS)
- CONVERTIBLE TO MAIN LUG
- INVERTIBLE
- TYPE N1 INDOOR ENCLOSURE
- ANSI 61 GRAY POWDER COATED ENCLOSURE (SEE CHART FOR TRIM/DOOR COLOR)
- FULL LENGTH NEUTRALS
- DESIGNED FOR USE WITH WIREGUIDE™ CIRCUIT BREAKERS

Catalog Number	ENCLOSURE DIMS L	W	D	Amps Max	Number Spaces	Number Circuits	Bus Bar Material	Bus Bar Plating	Trim Color
P2040B1150ACU	24.00	14.25	3.88	150	20	40	Copper	no	Gray
P2040B1150ACUW	24.00	14.25	3.88	150	20	40	Copper	no	White

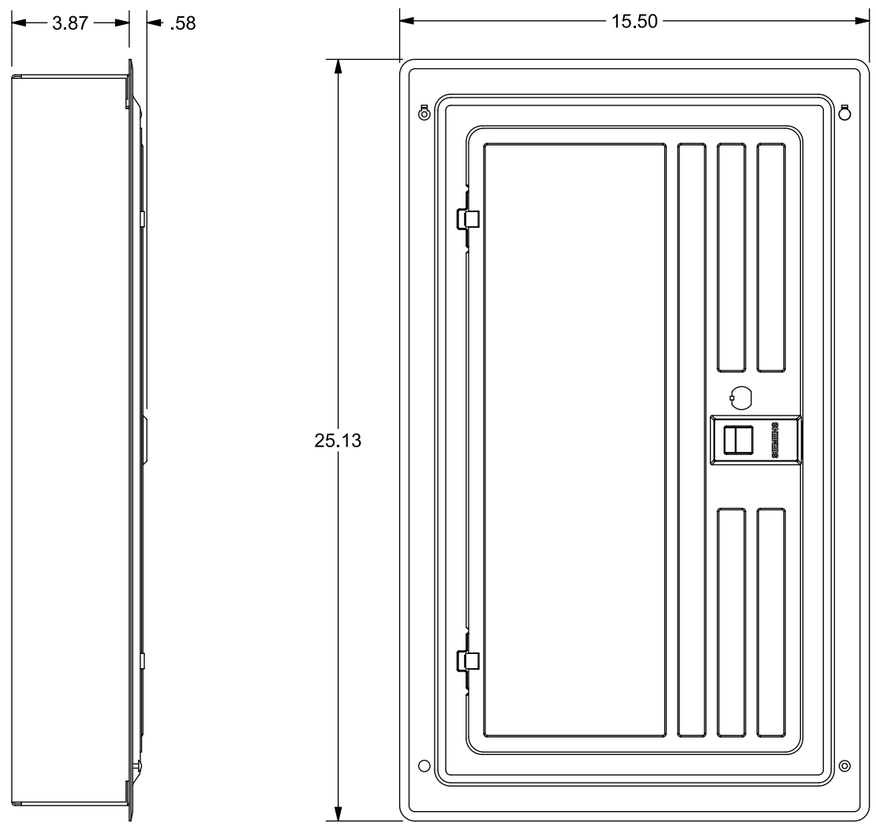

VIEW SHOWN WITH TRIM ASSEMBLY REMOVED

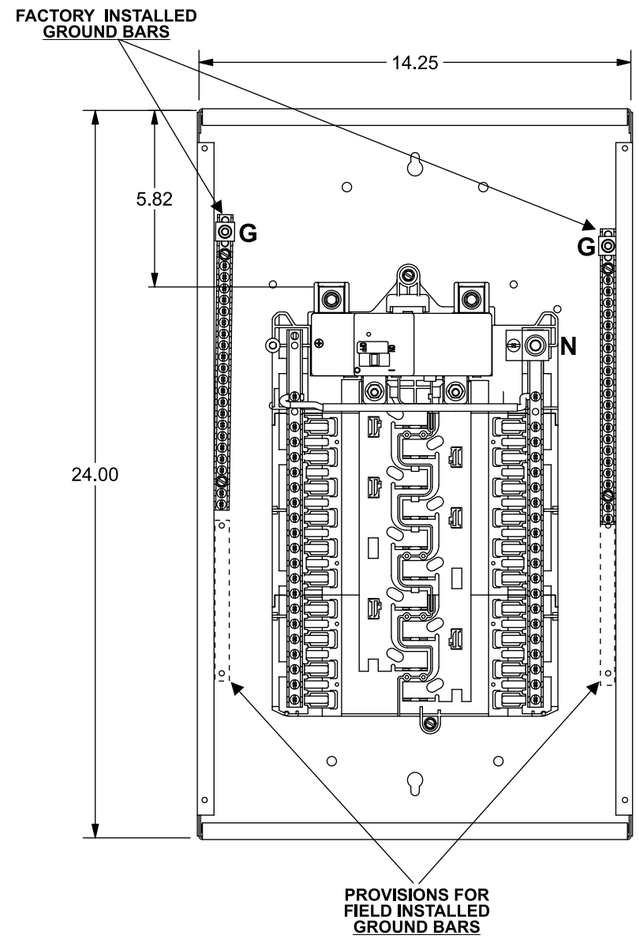

Trim/Door Detail

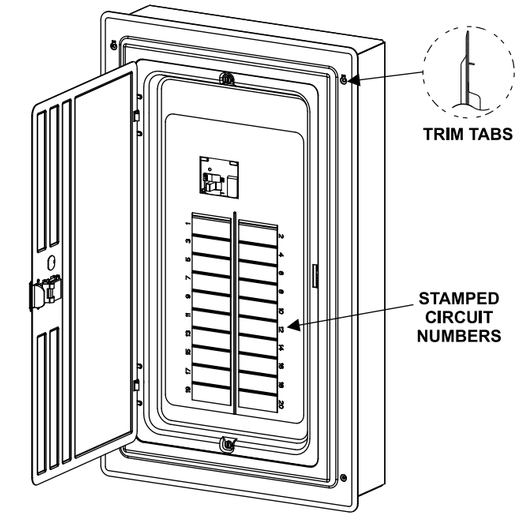

KO Diagram

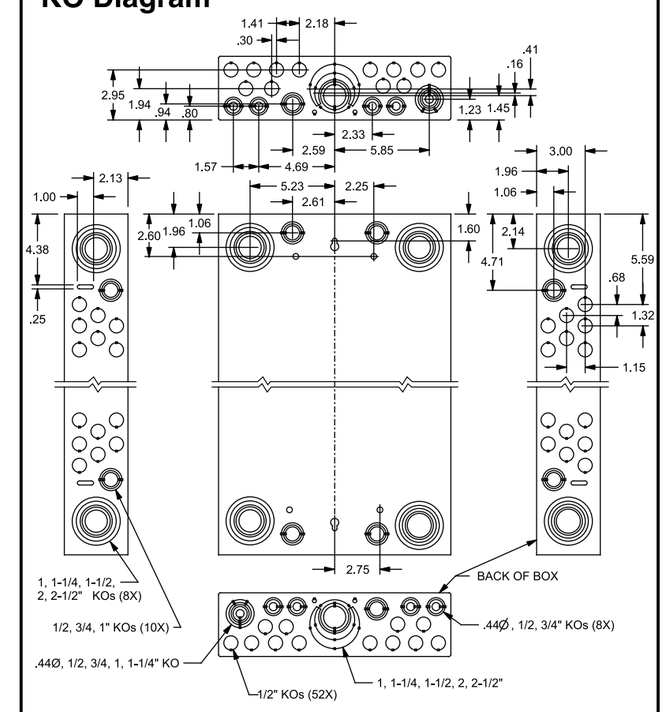

TERMINAL WIRE SIZES AND TORQUES

USE COPPER OR ALUMINUM 60°/75°C WIRE

SEE BREAKER MARKINGS FOR WIRE SIZE AND TORQUE REQUIREMENTS

TERMINALS	WIRE	TORQUE
N	4/0-4 AWG CU; 300kcmil-4 AWG AL	275 LB-INS
G	2/0-4 AWG	110 LB-INS
MAIN BREAKER	1/0 AWG CU; 3/0 AWG AL MAX.	See Breaker
NEUTRAL/GROUND BARS (USE TYPE EC2GB or EC3GB GND BAR KIT ACCESSORY)	10-14 CU/10-12 AL 8 AWG 6-4 AWG	20 LB-INS 25 LB-INS 35 LB-INS
GROUND CONDUCTORS ONLY	(2)or(3) 14 AWG (2) 12-10 AWG	20 LB-INS 20 LB-INS
ECLK1-2 NEUTRAL LUG KIT ECLK2 NEUTRAL LUG KIT ECLK3 NEUTRAL LUG KIT	2/0-2 AWG 2/0-4 AWG 300 kcmil - 1 AWG	45 LB-INS 135 LB-INS 340 LB-INS
MAIN LUG/MAIN BRKR TO BUS CONNECTION (1/4-20 NUT)		45 LB-INS
BONDING SCREW		45 LB-INS

MAIN LUG / MAIN BREAKER KITS	
USE APPROPRIATE KIT FROM CHART BELOW TO CONVERT PANEL	
DESCRIPTION	CAT. NO.
150 AMP MAIN BREAKER	MBK150A
150-225 AMP MAIN LUG	ECMLK225

ACCESSORIES

REFER TO WIRING DIAGRAM FOR CORRECT ACCESSORY USAGE

ACCESSORIES	
DESCRIPTION	CAT. NO.
DOOR LOCK	ECQFL2
FILLER PLATE, 1"	QF3
QP BREAKER HOLD-DOWN	ECMBR2
QNR LINE TERMINAL BARRIER	ECLTB3
BONDABLE GROUND LUG	ECLKB1
SUBFEED LUG KIT	ECLK2125
STANDBY PWR INTERLOCK KITS: ECSBPK01, ECSBPK02, ECSBPK03, ECSBPK05, ECSBPK06, ECSBPK07	

GROUND BAR KITS	
DESCRIPTION	CAT. NO.
TYPE EC2GB KIT, 12 SCREWS	EC2GB12
TYPE EC2GB KIT, 12 SCREWS, 2/0 LUG	EC2GB122
TYPE EC2GB KIT, 15 SCREWS	EC2GB15
TYPE EC2GB KIT, 15 SCREWS, 2/0 LUG	EC2GB152
TYPE EC3GB KIT, 21 SCREWS	EC3GB21
TYPE EC3GB KIT, 21 SCREWS, 2/0 LUG	EC3GB212
TYPE EC3GB KIT, 27 SCREWS	EC3GB27
TYPE EC3GB KIT, 27 SCREWS, 2/0 LUG	EC3GB272
TYPE EC3GB KIT, 30 SCREWS	EC3GB30
TYPE EC3GB KIT, 30 SCREWS, 2/0 LUG	EC3GB302
TYPE EC3GB KIT, 35 SCREWS, 2/0 LUG	EC3GB352

Designed for use with
WireGuide™ Circuit Breakers

Pre-trimmed and ready to install.
Decreased installation time.
Available in Dual Function and AFCI.

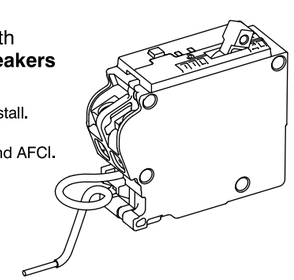

© 2017 Copyright Siemens Industry, Inc.

SIEMENS
Siemens Industry, Inc.

WireGuide™ Load Centers

Description: **PL Series, 1 Phase, Indoor, 150A, 20 Position, Main Breaker**

KAM 6/1/17 | DO NOT SCALE DRAWING | Dwg No: **P2040B1150ACU-W**