Catalog Number: MC4040S1200SC

Features and Ratings

- Outdoor Enclosure (NEMA Type 3R)
- Ring Type Meter Cover
- 200A Max, 1 Phase, 3 Wire, 120/240V~, 120/208V~
- 22,000 AIC Max. Rated (See Wiring Diagram for Details)
- Meter Socket Rating: 200A Continuous
- (40) 1" Spaces, (40) Circuits Max.
- Overhead or Underground Service Entrance
- Surface Mounting
- For Photovoltaic or Alternate Energy applications (Use breaker types QP, QPH, MP-T, 100A Max.)
- Complies with EUSERC Dwg. No. 301

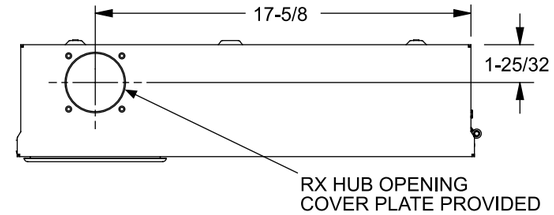

Accessories, Torques & Wire Sizes

Trade size (in)	Catalog number
RX Type Hub (top endwall)	
1 ¼"	EC38597
1 ½"	EC38598
2"	EC38599
2 ½"	EC38600
RX Cover Plate	EC38595
HC Type Hub (bottom endwall)	
2"	ECHC200
2 ½"	ECHC250
3"	ECHC300

Filler Plate - ECQF3
5th Jaw Assembly - EMC5J
Flush Rail Kit - FRK1
Interlock Kit - ECSBPK05, ECSBPK07
Ground Bars - ECGB5, ECGB10, ECGB101

Lug Kits:	Wire Range	Torque
ECLK1-2	2/0 - #2	45 lb in
ECLK2	2/0 - #4	135 lb in
ECLK3	300kcmil - #1	340 lb in

View Shown Without Covers, Door, Deadfront

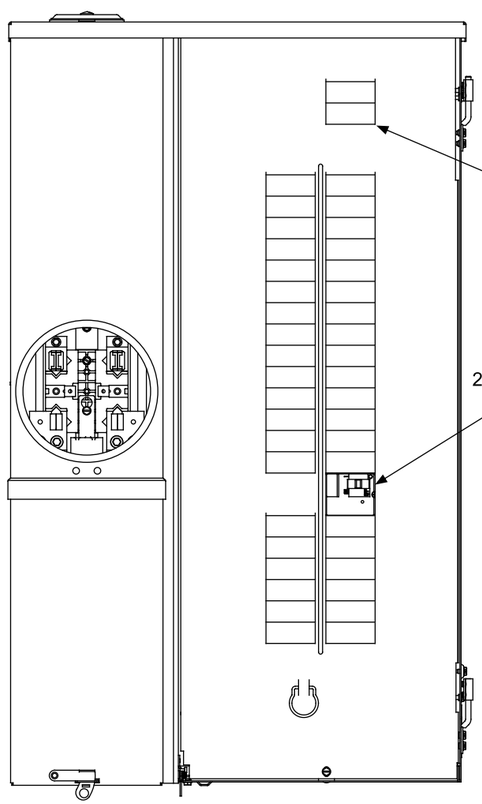

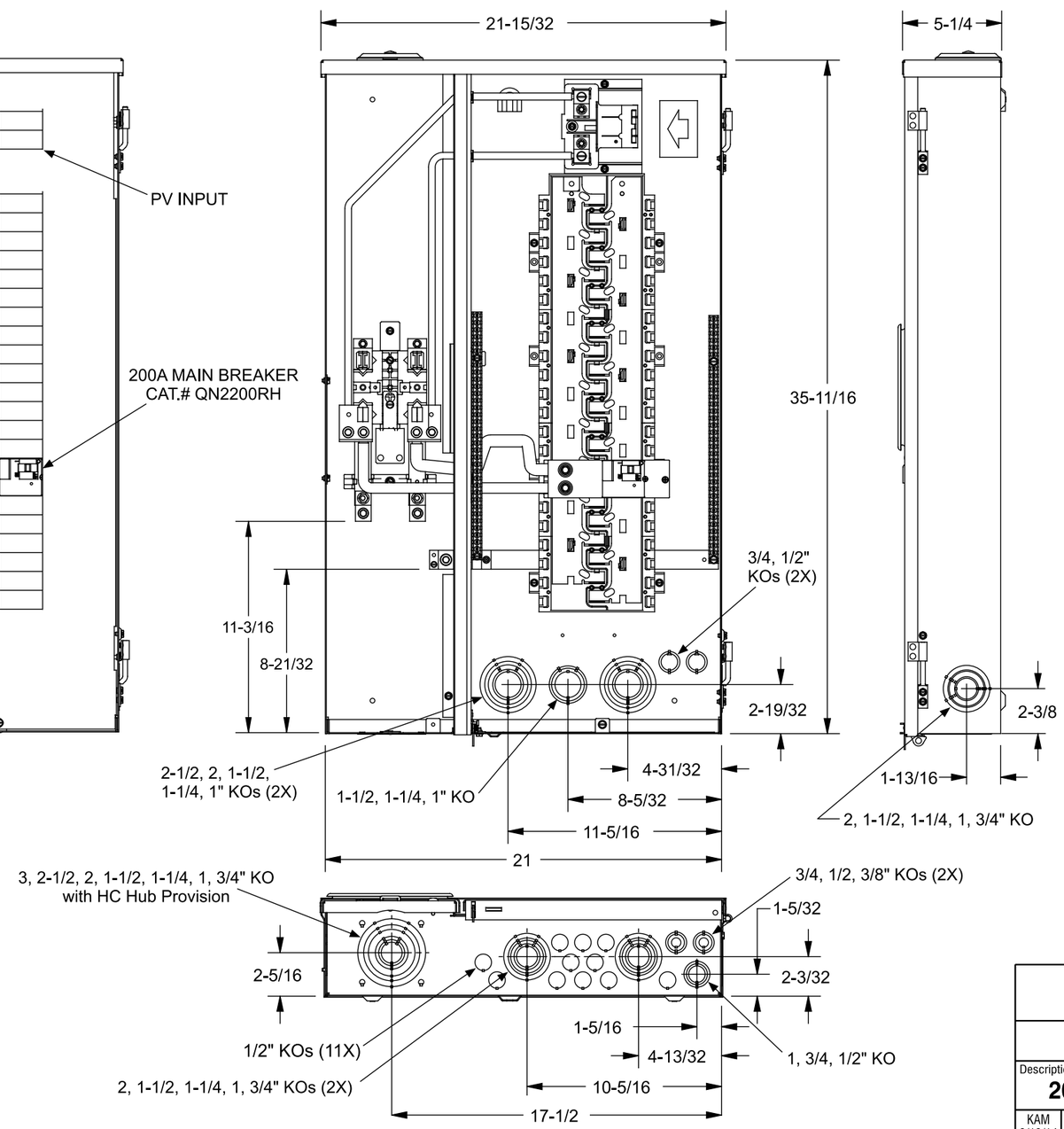

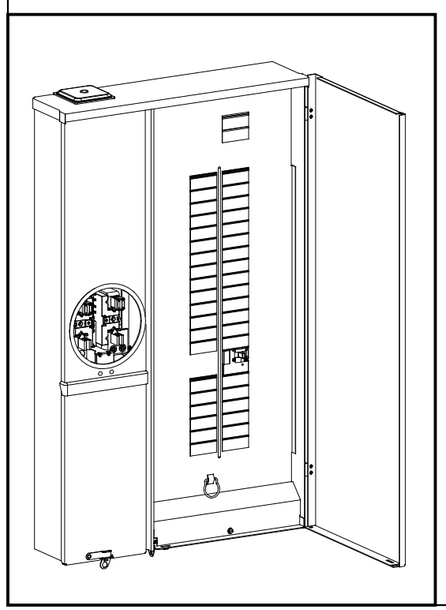

Schematic

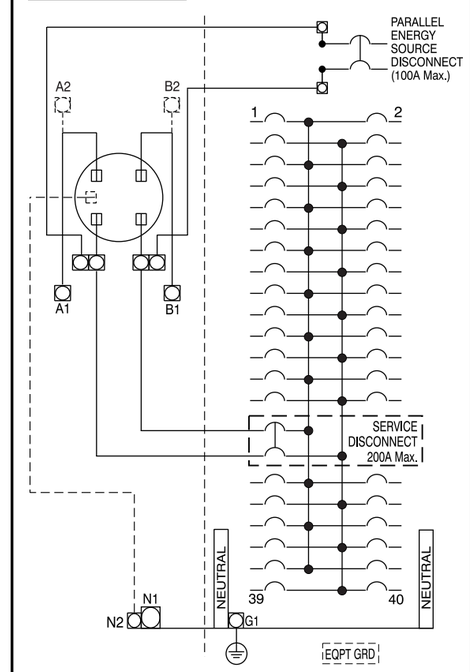

Any 80-125 Amp circuit breaker must be installed in the lowest position in the branch panel. All other positions are limited to 70 Amp maximum circuit breakers.

Terminal	Wire Size	Torque
A1, B1, A2, B2	250kcmil - #4	250 lb-in
N1	250kcmil - #6	275 lb. in.
N2	#2 - #14	50 lb-in
G1	1/0 - #14	120 lb-in
Branch Breaker Terminals	See Markings on Breaker	
Neutral Bar	#10 - #14 CU #10 - #12 AL #8 #6 - #4	20 lb-in 20 lb-in 25 lb-in 35 lb-in
Ground Conductors Only	(2) or (3) #14 AWG	20 lb-in
	(2) #12-#10 AWG	20 lb-in

© 2014 Copyright Siemens Industry, Inc.

SIEMENS
Siemens Industry, Inc.

SolarReady™ Meter Combination

Description:
200A, 40 Sp/40 Ckt, OH/UG, Surface Mount

KAM 3/19/14	Fam K	DO NOT SCALE DRAWING	Dwg. No.	MC4040S1200SC

FamK-T24