FOXCONN®

SPECIFICATIONS

HARD METRIC CONNECTOR

2H Series
Hard Metric Header
Type D
Press Fit Type
2.0mm Pitch
8+2 Row

Mechanical
Contact Retention Force: *0.5Kg min.*

Electrical
Electrical
Voltage Rating: *500V*
Current Rating: *1A*
Contact Resistance: *20mΩ max.*
Dielectrical Withstanding Voltage: *750V*
Insulation Resistance: 10000MΩ min.

Physical
Housing: *PBT, UL 94-0, Gray*
Contact: *Phosphor Bronze*
Plating: *See "ORDERING INFORMATION"*
Operating Temperature: *-55°℃ to +125℃*

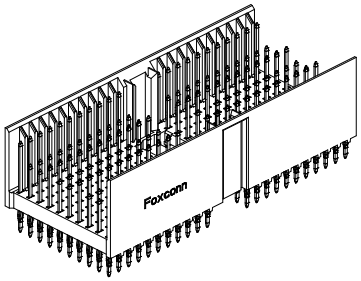

DRAWING

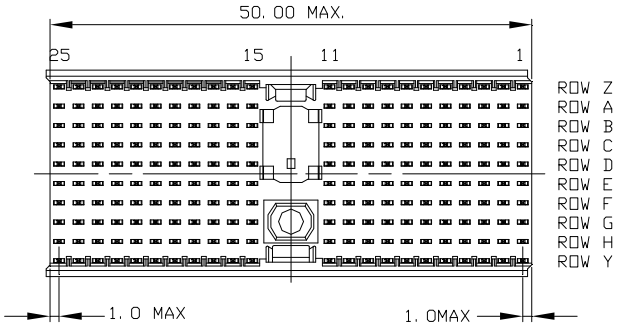

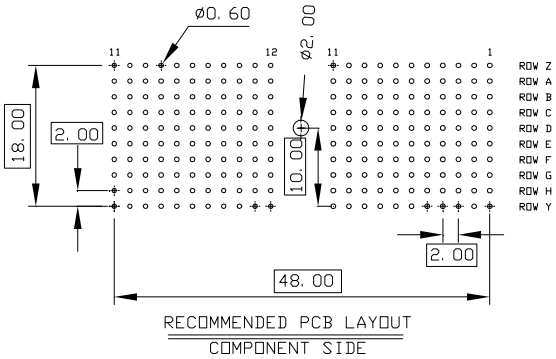

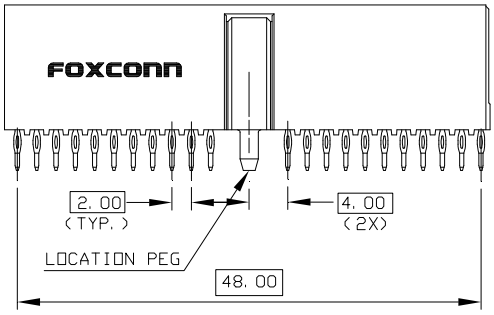

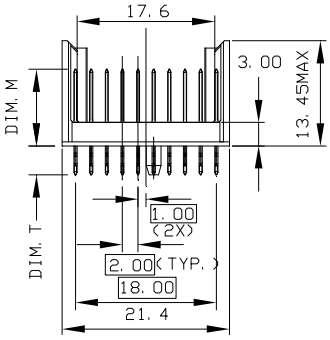

ORDERING INFORMATION

PRODUCT NO.: 2H1* * * * * - * D * * *

- Row No.
  8:8 Row
  A:8+2Row
- Column No.:
  22:22 Column
- Location Peg:
  0:W/O Location Peg
  1:W/ Location Peg
- Plating Spec.
  1:Gold Flash
  3:30u" (0.76um) FPT Plating
  5:50u" (1.27um) Au Plating
- Extension Code
  N, S, E, F
- Option For Tail Length and Hot Swap
- Selective Pin Pattern

All specification & dimensions are subject to change, please call your nearest Foxconn sales representative for update information.