IDEAS GENERATED DRAWING, DO NOT CHANGE BY HAND.

| REV. | ECN. NO. | APPD. |
|---|---|---|
| A | BC-10-0149242 | Tony Hou |
| B | BC-12-0057024 | Dickie Huang |
| C | BC-13-0051935 | Dickie Huang |

NOTES:

1. ALL DIMENSIONS ARE IN MILLIMETERS.
2. DIMENSIONING AND TOLERANCING PER ASME Y14.5M-1994.
3. MATERIAL: LCP E130i, UL94V-0, BLACK
4. FOXCONN LOGO, SOCKET NAME, REMOVE MARK AND PIN 1 MARK ARE LOCATED APPROXIMATELY WITH A DEPTH OF 0.2mm MAX.
5. HARMFUL MATERIAL CONTROL PLEASE FOLLOW DOC. NO. "EPI12". THE CONCENTRATION OF Br &Cl CAN SATISFY THE REQUIREMENT OF OF HALOGEN-FREE IN DOCUMENT EPI12.

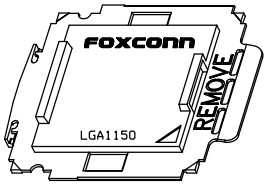


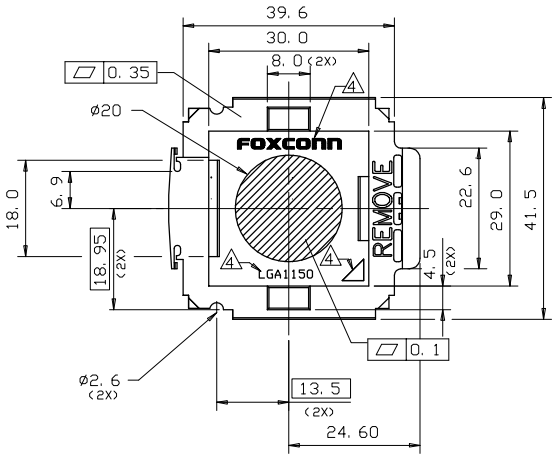


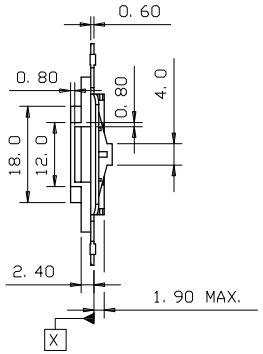


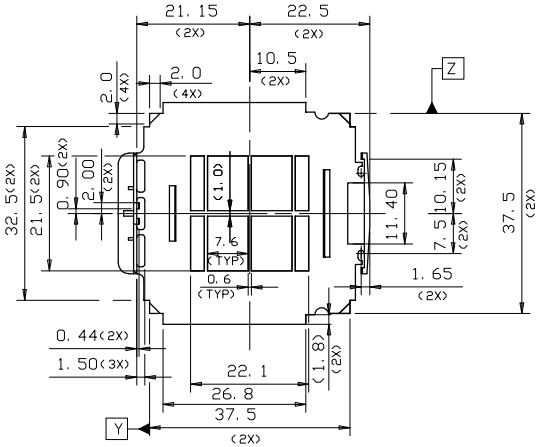


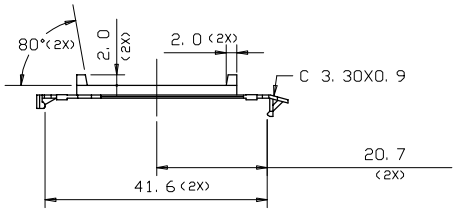


| | | | |
|---|---|---|---|
| X. ± | X.° ± 1° | UNITS mm | NAME (INTENDED USE) LGA 1150 H3 SOCKET |
| .X ± 0.10 | .X° ± | MAT'L 4 | PART NO. (INTENDED USE) PE1150**-****-*** 3H9938**-****-*** |
| .XX ± 0.05 | .XX° ± | FINISH | APPD: Dickie Huang |
| .XXX ± 0.05 | .XXX° ± | Q'TY | CHKD: Mac Peng |
| | | | DR: Steven Dai 8/2'13 |

THESE DRAWINGS AND SPECIFICATIONS ARE THE PROPERTY OF HON HAI PRECISION IND. CO., LTD. AND SHALL NOT BE REPRODUCED, COPIED OR USED IN ANY MANNER WITHOUT THE PRIOR WRITTEN CONSENT OF HON HAI PRECISION IND. CO., LTD.

FOXCONN
HON HAI PRECISION IND. CO., LTD.
TAIPEI, TAIWAN, R.O.C.

TITLE: CAP DRAWING FOR LGA 1150 H3 SOCKET

DWG NO.: 012-1000-7240

| SCALE | SHEET | REV. |
|---|---|---|
| 1:1 | 1/1 | C |

PART NO.: 012-1000-7240